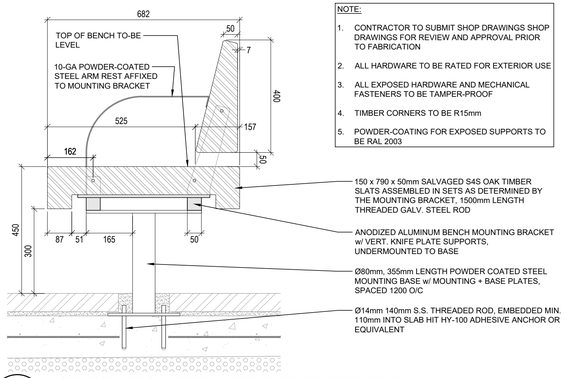

NOTE:

1. CONTRACTOR TO SUBMIT SHOP DRAWINGS SHOP DRAWINGS FOR REVIEW AND APPROVAL PRIOR TO FABRICATION
2. ALL HARDWARE TO BE RATED FOR EXTERIOR USE
3. ALL EXPOSED HARDWARE AND MECHANICAL FASTENERS TO BE TAMPER-PROOF
4. TIMBER CORNERS TO BE R15mm
5. POWDER-COATING FOR EXPOSED SUPPORTS TO BE RAL 2003

1 / L2.1 FREE-STANDING BENCH ELEVATION

SCALE - 1 : 10

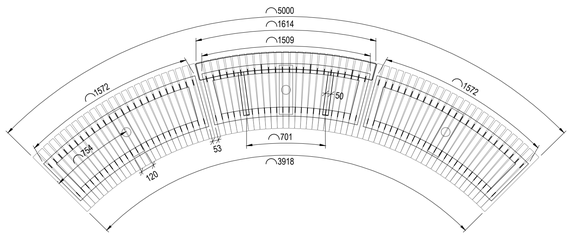

2 / L2.1 FREE-STANDING BENCH PLAN

SCALE - 1 : 25

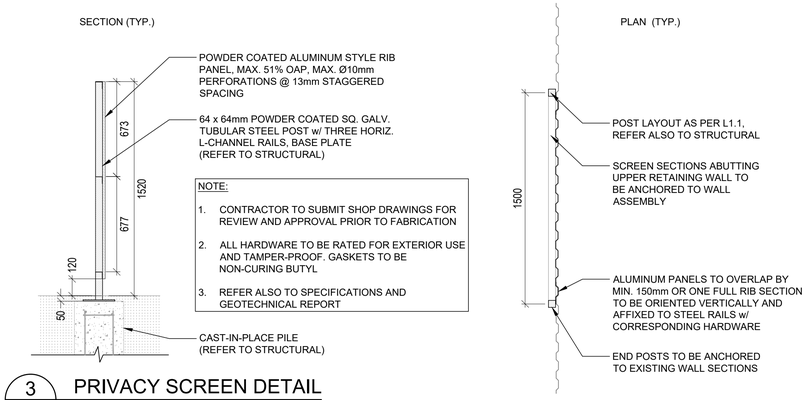

NOTE:

1. CONTRACTOR TO SUBMIT SHOP DRAWINGS FOR REVIEW AND APPROVAL PRIOR TO FABRICATION
2. ALL HARDWARE TO BE RATED FOR EXTERIOR USE AND TAMPER-PROOF. GASKETS TO BE NON-CURING BUTYL
3. REFER ALSO TO SPECIFICATIONS AND GEOTECHNICAL REPORT

3 / L2.1 PRIVACY SCREEN DETAIL

SCALE - 1 : 20

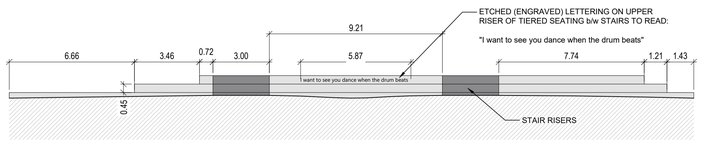

4 / L2.1 EMBEDDED POEM ART PIECE

SCALE - 1 : 150

5 / L2.1 EMBEDDED POEM ART PIECE DETAIL

SCALE - 1 : 5

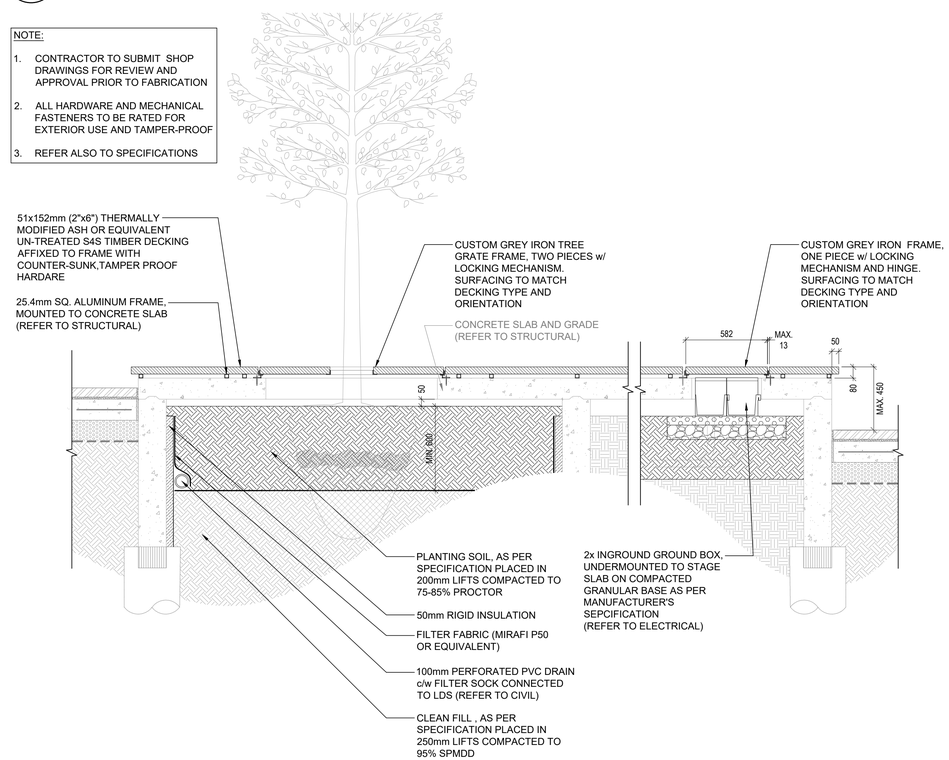

NOTE:

1. CONTRACTOR TO SUBMIT SHOP DRAWINGS FOR REVIEW AND APPROVAL PRIOR TO FABRICATION
2. ALL HARDWARE AND MECHANICAL FASTENERS TO BE RATED FOR EXTERIOR USE AND TAMPER-PROOF
3. REFER ALSO TO SPECIFICATIONS

6 / L2.1 PLATFORM (STAGE) SECTION

SCALE - 1 : 20

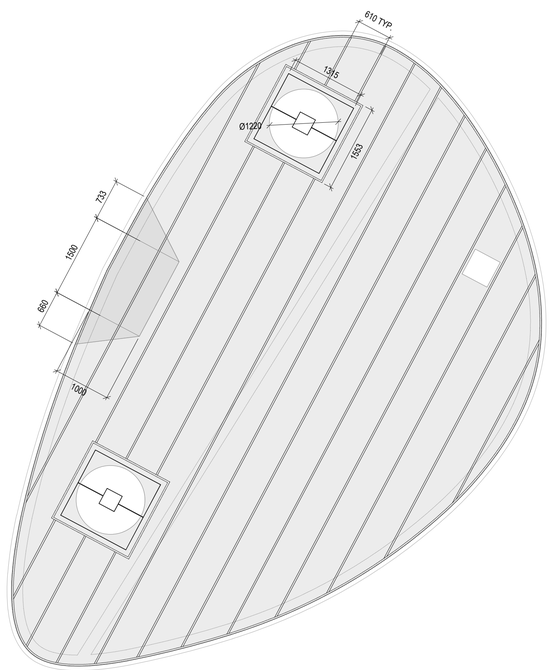

7 / L2.1 PLATFORM (STAGE) FRAMING PLAN

SCALE - 1 : 50

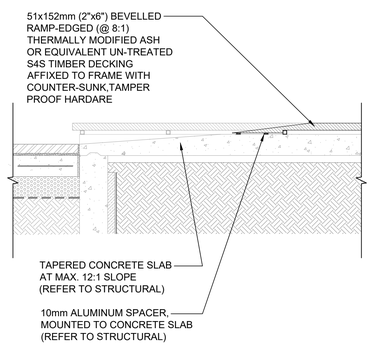

8 / L2.1 PLATFORM (STAGE) RAMP DETAIL

SCALE - 1 : 20

BID OPPORTUNITY No. 78-2024

NOTES:

APPLICABLE CITY OF WINNIPEG STANDARDS:

1. CW 3010 - CLEARING AND GRUBBING
2. CW 3110 - SUB-GRADE, SUB-BASE AND BASE COURSE CONSTRUCTION
3. CW 3130 - SUPPLY AND INSTALLATION OF GEOTEXTILE FABRICS
4. CW 3135 - SUPPLY AND INSTALLATION OF GEOGRID
5. CW 3170 - EARTHWORK AND GRADING
6. CW 3230 - FULL-DEPTH PATCHING OF EXISTING SLABS AND JOINTS
7. CW 3235 - RENEWAL OF EXISTING MISCELLANEOUS CONCRETE SLABS
8. CW 3240 - RENEWAL OF EXISTING CURB
9. CW 3310 - PORTLAND CEMENT CONCRETE PAVEMENT WORKS
10. CW 3324 - PORTLAND CEMENT CONCRETE SIDEWALK
11. CW 3335 - INSTALLATION OF INTERLOCKING PAVEMENT STONES ON A LEAN CONCRETE BASE

REV	YY / MM / DD	DESCRIPTION	BY
1	24 / 02 / 12	ISSUED FOR TENDER	CO

A. SECTION LETTER OR DETAIL NUMBER,
B. DRAWING WHERE SECTION OR DETAIL IS DRAWN,

OR

DRAWING WHERE SECTION OR DETAIL IS INDICATED,
--- SECTION OR DETAIL SHOWN ON SAME DRAWING.

PROFESSIONAL'S SEAL

SCATLIFF + MILLER + MURRAY
visionary urban design + landscapes

CONSULTANT FILE NAME: AIR CANADA PARK - DD_L3.1

CLIENT: CITY OF WINNIPEG
PLANNING, PROPERTY & DEVELOPMENT

AIR CANADA WINDOW PARK REDEVELOPMENT

CITY DRAWING NUMBER	SHEET	OF
	10	28

DETAILS

DESIGN	DRAWN	DATE - Y / M / D	SCALE
CO/YK	YK/NH/CW	24 / 02 / 12	AS SHOWN
CHECKED	APPROVED	PROJECT No.	DRAWING No.
CO	CO	23-0107-002	L2.1

CAD File Name: 2024-02-09 air canada park - revised 10 11 1 12 13 D.dwg
sheet size - Super A1 24" x 36"
photoscale - 1:1 (metric)