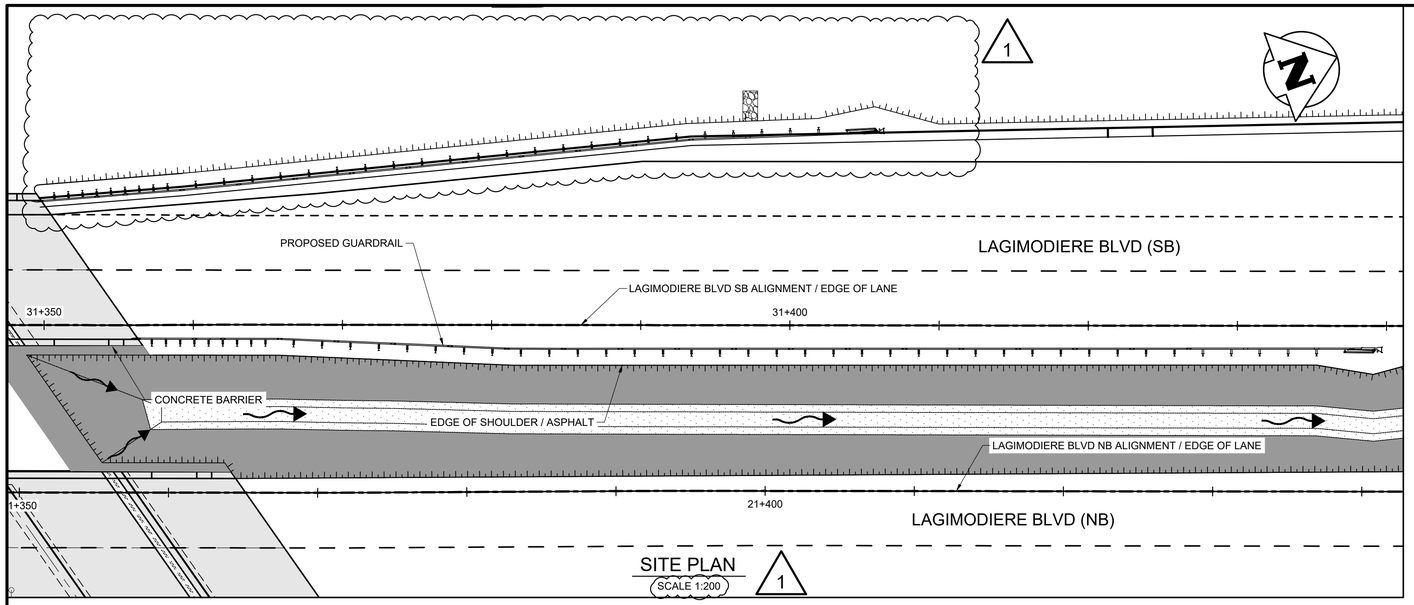

SITE PLAN
SCALE 1:200

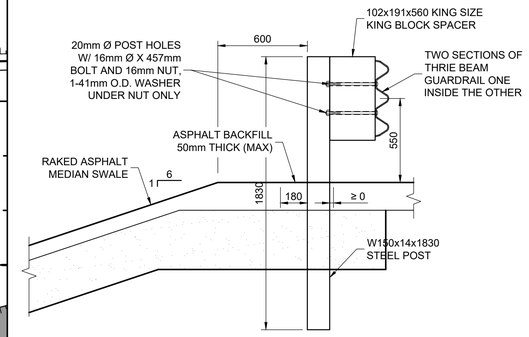

A
APPROACH GUARDRAIL SECTION
1:20

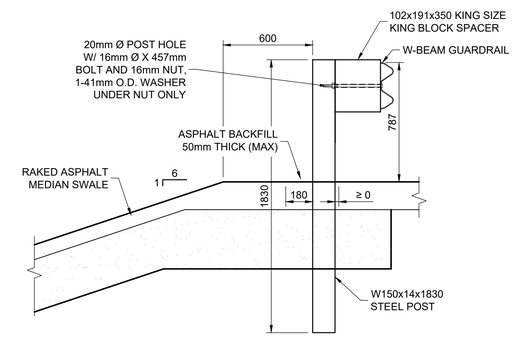

B
MIDWEST GUARDRAIL SECTION
1:20

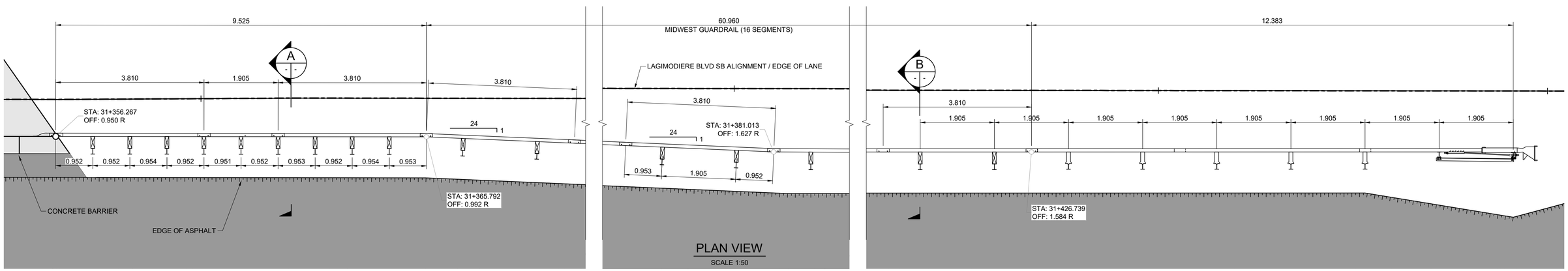

PLAN VIEW
SCALE 1:50

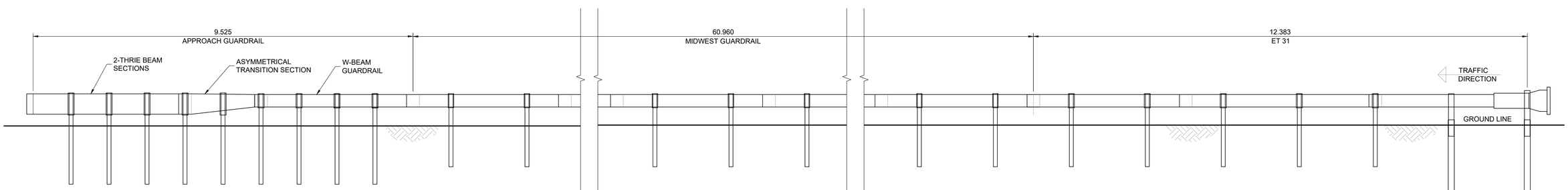

ELEVATION VIEW
SCALE 1:50

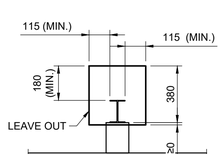

LEAVE OUT DETAIL
SCALE 1:20

METRIC

WHOLE NUMBERS INDICATE MILLIMETRES
DECIMALIZED NUMBERS INDICATE METRES

ENGINEERS GEOSCIENTISTS MANITOBA
Certificate of Authorization
Tetra Tech Canada Inc.
No. 6499

B.M.
ELEV.

NO.	REVISIONS	DATE	BY
1	ISSUED FOR ADDENDUM 5	25.09.22	JNC
0	ISSUED FOR TENDER	25.08.07	JNC

TETRA TECH

DESIGNED BY BG
REVIEWED BY JT
DRAWN BY BG
APPROVED BY JNC
SCALE: 1 : 50 OR AS NOTED
ACCEPTED BY CAM WARD, P.ENG.
DATE 25.08.07
DATE 2025.08.07

ORIGINAL DRAWING
REVISION " 0 " SEALED BY
J.N. CRANG
25.08.07

CONSULTANT DRAWING NO.
734-INF.MBI03007.01-DWG-C4314

Winnipeg
THE CITY OF WINNIPEG
PUBLIC WORKS DEPARTMENT

LAGIMODIERE TWIN OVERPASSES
OVER CPKC KEEWATIN
REHABILITATION AND RELATED WORKS

CITY DRAWING NUMBER P123-25-4314
SHEET 14 OF 20

GUARDRAIL DETAILS
LAGIMODIERE BLVD SOUTHBOUND
NORTH OF BRIDGE, RIGHT SIDE

4314