OPERATING & MAINTENANCE INSTRUCTIONS VOLUME 3

BINDER 2 OF 2

CITY OF WINNIPEG
485592 thru 485597

CONTROL PANEL
BILL OF MATERIAL

Item	Qty.	Description	Manufacturer
1	1	Signal Conditioner Motor Amperes 0-5 Amps to 4-20 mA, 120V A.C., 5-Amp input across a shunt resistor No. C006	Action Instruments ActionPak AP6010
2	1	Signal Conditioner Torque, 120V A.C., 0-10 Volts to 4-20 mA	Action Instruments ActionPak AP4300
3	2	Signal Conditioner Left Brg. Temp. 300° F, 120V A.C. RTD to 4-20 mA (100 Ohms at 0° C platinum)	Action Instruments ActionPak AP4151
4	2	Signal Conditioner Bowl and B/D RPM, 120V A.C. 1500 Hz to 4-20 mA	Action Instruments ActionPak AP7010
5	1	Vibration Monitor 0-20 mils to 4-20 mA	Vitec Multi-Measurements, Inc. Model 435-2
6	1	Horn Flush Mounted 120V A.C.	Wheelock Part No. 100521
7	18	Relay Plug in 3 P.D.T. 120V A.C. with pilot light and manual operator	SQ D Class 8501 Type KU13-P14-M1
8	2	Digital Meter 4-1/2-digit, .56 red LED display, 120V A.C. zero and span potentiometers	Newport Model 2002A-P-SPC-PB2-FS1
9	1	Elapsed Time Meter Non-reset, 99,999.9 hrs, 120V A.C.	Automatic Timing & Controls ATC5700A-102-A00-XX
10	1	Loader Monitor	SQ D SYMAX Class 8010, Type SLM-100
11	1	Power Supply 480VA, with CC-110 and CC-120 cables	SQ D SYMAX Class 8030, Type PS-31
12	1	Register Rack 9-slot	SQ D SYMAX Class 8030, Type RRK-200
13	1	I/O Rack, Hi-Density	SQ D SYMAX Class 8030, Type HRK-200
14	1	Processor 4K	SQ D SYMAX Class 8020, Type SCP-522
15	1	Local Serial Interface	SQ D SYMAX Class 8030, Type CRM-210

CITY OF WINNIPEG
485592 THRU 485597

Control Panel Bill of Material (cont).

Item	Qty.	Description	Manufacturer
16	1	Remote Serial Interface	SQ D SYMAX Class 8030, Type CRM-222
17	2	Analog Input Module	SQ D SYMAX Class 8030, Type RIM-121
18	1	Analog Output Module	SQ D SYMAX Class s8030, Type ROM-121
19	6	120V A.C. Input Module, Hi-Density	SQ D SYMAX Class 8030, Type HIM-101
20	6	120V A.C. Output Module, Hi-Density	SQ D SYMAX Class 8030, Type HOM-221
21	1	Constant Voltage Regulator, 500VA, 120V A.C.	Acme Transformer T-1-69432
22	2	Start Pushbutton, Heavy Duty Oiltight Sq., single-button, with indicating light, 120V/6V Transformer, Extended Button	Cutler Hammer Cat. E30DA Transformer E30KB231 Extended Button Contact Block E30KLA9
23	3	Stop Pushbutton, Momentary, Heavy Duty Oiltight Sq., single button, with indicating light, 120V/6V Transformer Extended Button	Cutler Hammer Cat. E30DA Transformer E30KB231 Extended Button Contact Block E30KLA9
24	1	Reset/Silence Pushbutton, Momentary Heavy Duty, Oiltight Sq., two buttons no indicating light	Cutler Hammer Cat. E30AC Top and Bottom Buttons E30KB100 Contact Block E30KLA9
25	1	Local/Computer Pushbutton Maintained Heavy Duty Oiltight, no indicating light, extended buttons	Cutler Hammer Cat. E30AD Top and Bottom Buttons E30KB100 Contact Block E30KLA9
26	1	Hold/Scan Pushbutton Maintained Heavy Duty Oiltight Sq., no indicating lights	Cutler Hammer Cat. E30AD Top and Bottom Buttons E30KB100 Contact Block E30KLA9
27	1	Increase/Decrease Pushbutton, Momentary, Heavy-Duty, Oiltight Sq. No indicating lights, extended buttons	Cutler Hammer Cat. E30AC Top and Bottom Buttuns E30KB100
28	1	Forward/Reverse Pushbutton Momentary, Heavy-Duty, Oiltight Sq. Two Buttons, with indicating lights, 120V/6V Transformer, extended buttons	Cutler Hammer Cat. E30JA Transformer Top Button E30KE107 Bottom Button E30KE125 Contact Block E30KLA9
29	1	Reset DC Circuit Breaker Pushbutton Momentary, Heavy-Duty, Oiltight Sq. with indicating light, extended buttons	Cutler Hammer Cat. E30DA Transformer E30KB100 Button Contact Block E30KLA9

CITY OF WINNIPEG
485592 THRU 485597

Control Panel Bill of Material (cont).

Item	Qty	Description	Manufacturer
30	3	Single Indicating Light, Heavy-Duty Oiltight Sq., with 120V/6V Transformer	Cutler Hammer Cat. E30BA Transformer Type F lens
31		Dual Indicating Light, Heavy-Duty Oiltight Sq., with 120V/6V Transformer	Cutler Hammer Cat. E30CA Transformer Type G lens
32	1	3-Pole Circuit Breaker 80 Amp, 600V	SQ D FHL36080
33	1	Control Transformer 1000VA Dual Voltage Primary and secondary	Acme Transformer Open Type TA54524
34	1	25-HP D.C. Controller	Randtronic Size A, with Armature Loop Circuit Breaker
35	1	Isolation Transformer 34KVA 575V/460V	Heavy Duty Cat. DT621H34-CSA-WS
36	1	Time Delay Relay 0.1 - 60 sec., Convertible Contacts On/Off Delay	SQ D Class 8501 Type XO-40-XTE1

SECTION 7

SUPPLIER'S DATA

Instruction Bulletin

Subject: **SY/MAX®**
CLASS 8010 TYPE SLM-100
LOADER/MONITOR

DESCRIPTION:

The following contains detailed information on the Class 8010 Type SLM-100 Loader/Monitor. Included are instructions on its operation and installation. The Loader/Monitor is designed to work with the SY/MAX® Programmable Controller Family. A NEMA 12 lockable cover is optionally available. A working knowledge of the various controllers' addressing schemes is assumed. For addressing information, the user should refer to the instruction bulletin which describes the particular processor being used.

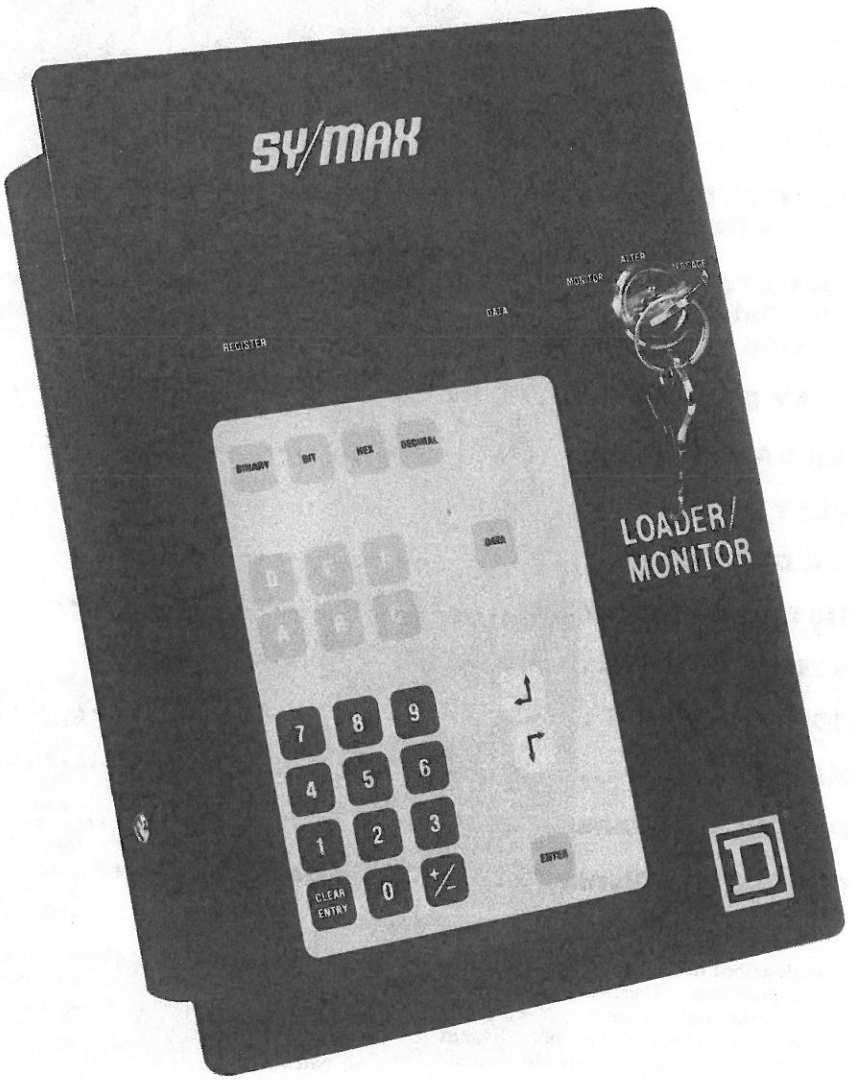

Copyright © Square D Company, 1986
Supersedes 30598-163-02, April 1982
Printed in U.S.A.
SQUARE D
AJR

TABLE OF CONTENTS

Section Number	Title	Page
1.0	INTRODUCTION	3
2.0	SPECIFICATIONS	4
3.0	KEY OPERATED SWITCH	5
3.1	Monitor	5
3.2	Alter	5
3.3	Message	5
4.0	KEYPAD	5
4.1	Decimal Mode	5
4.2	Hexadecimal Mode	5
4.3	BIT Mode	5
4.4	Binary Mode	5
5.0	DISPLAY	5
6.0	CONNECTIONS	6
7.0	POWER-UP	6
8.0	DISPLAY DATA (DECIMAL)	6
8.1	Display Data (Hexadecimal)	6
9.0	ALTER DATA (DECIMAL)	7
9.1	Alter Data (Hexadecimal)	7
9.2	Altering Timer/Counter Decode Values	7
10.0	DISPLAY DATA (BINARY)	7
11.0	ALTER DATA (BINARY)	7
12.0	DISPLAY DATA (BIT)	8
13.0	ALTER DATA (BIT)	9
14.0	REGISTER CAPACITY	9
15.0	MESSAGE MODE	9
16.0	ERROR MESSAGES	10
17.0	NEMA 12 COVER	10
	APPENDIX A — Remote Mounting	11
	APPENDIX B — Display for the D-Log Data Controller	12

The products and services described in this manual are useful in a wide variety of different applications. Therefore, the user and others responsible for applying the products and services described herein are responsible for determining their acceptability for each application. While efforts have been made to provide accurate information within this manual, the Square D Company assumes no responsibility for the accuracy, completeness, sufficiency or usefulness of the information contained herein.

Under no circumstances will the Square D Company or any of its subsidiaries be responsible or liable for any damages or losses, including indirect or consequential damages or losses, arising out of either the use of any information contained within this manual or the use of any products or services referenced herein.

No patent liability is assumed by the Square D Company with respect to the use of any of the information, products, circuits, programming or services referenced herein.

The information contained within this manual is subject to change without notice.

1.0 INTRODUCTION

The SY/MAX Loader/Monitor is a hand-held or panel-mounted device which provides easy access to data at a minimum cost. Any data registers within the processor can be monitored. The status of external I/O and internal outputs (relay equivalents) can also be monitored. The data within any register not protected by the processor's fencing capability can be altered (with the exception of processor control registers). The Loader/Monitor provides the user with the capability of changing timer delays, counter setpoints, math constants, etc; without the need for any other programming equipment. It is also capable of displaying English language messages such as alarms, production reports, and machine diagnostic information.

The Type SLM-100 connects directly to the SY/MAX Model 100, 300, 500, and 700 Processors. It is enclosed in sheet metal and designed to be panel-mounted within 10 feet of the processor. The addition of a power supply and special cabling will extend this distance up to 10,000 ft.; see Appendix A. The front panel contains a 16 character alphanumeric display, a key-operated selector switch, and a sealed keypad.

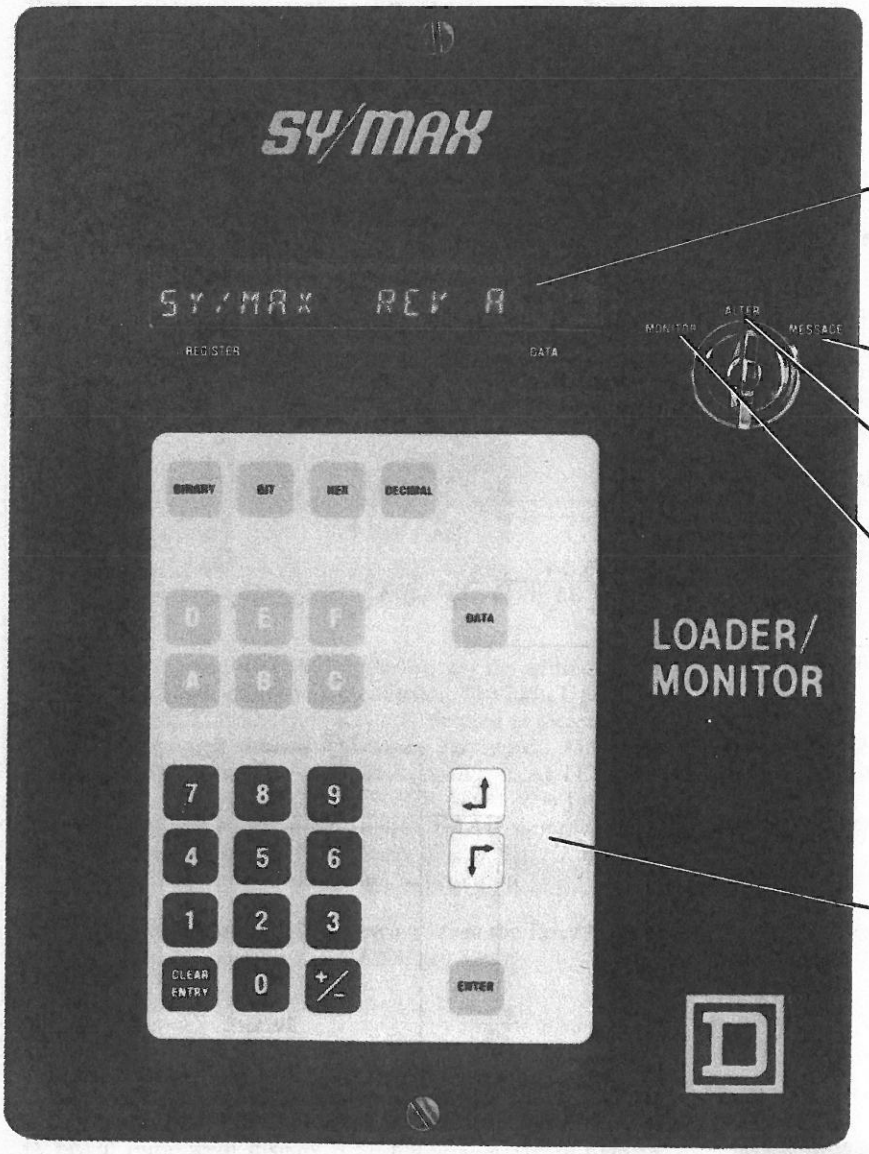

Sixteen character alphanumeric fluorescent display.

Key-operated selector switch.

MESSAGE - Display English language messages generated by the processor (Keyboard disabled).

ALTER - In addition to the Monitor operations, data may be altered in any unprotected register, or unfenced register.

MONITOR - Display the status of external I/O, internal outputs, and data within any storage register. No data may be altered.

26 Key Sealed Keypad

2.0 SPECIFICATIONS

Weight (Approx.) . . . . . 3.4 lb/1.54kg.

Rated Current Draw on
SY/MAX Power Supply . . . . 600mA Typical

Ambient Temperature . . . . . 0 - 60°C
Humidity Rating . . . . . 0 - 95% Non-condensing

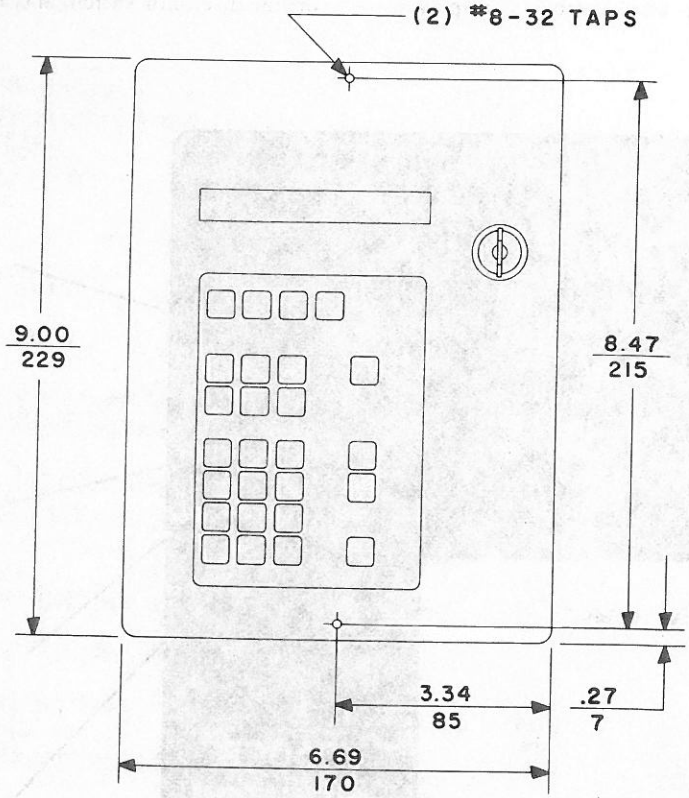

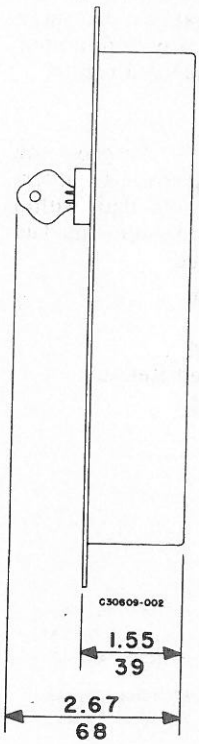

Dual Dimensions: INCHES / Millimeters

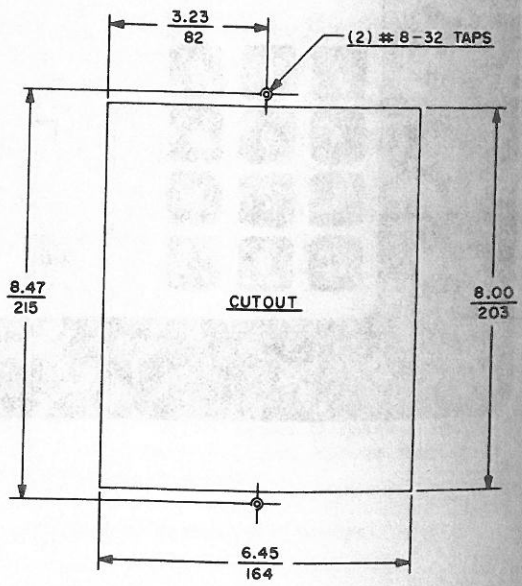

3.0 KEY-OPERATED SWITCH

A key-operated selector switch determines the Loader/Monitor's function. The key can be removed in any one of the three positions.

3.1 Monitor

With the key switch in the MONITOR position, data and I/O status can be monitored by entering the address of the desired register. The Loader/Monitor then automatically displays this information. Data cannot be altered in this mode.

3.2 Alter

With the key switch in the ALTER position, the Loader/Monitor is still capable of monitoring data registers as described above. In addition, the user can enter new data from the keypad. Data can be altered only in this mode. Data cannot be altered in protected registers, fenced registers, or in Processor/Local Interface control registers.

3.3 Message

If the key switch is placed in the MESSAGE position, the keyboard is disabled. In this position the Loader/Monitor will display any alphanumeric message generated by the processor. Using the Loader/Monitor in this manner provides alarm annunciation and report generation without the need for any expensive, additional hardware.

4.0 KEYPAD

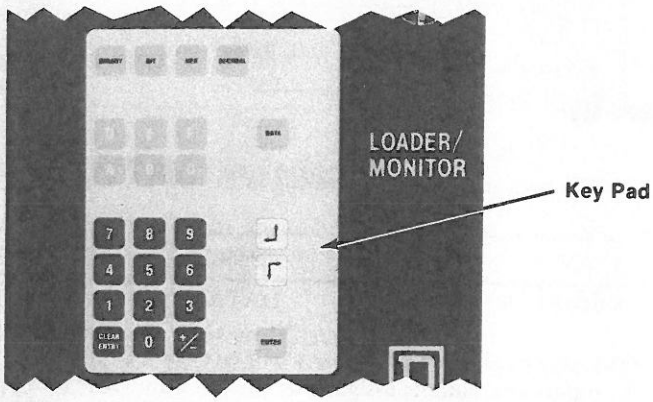

A numerical keypad (0 to 9) is used to enter the address of the data register to be monitored or altered. The Left/Up Arrow Key and Right/Down Arrow Key may be used to increment or decrement through the registers being examined. Once displayed, register data can be altered (keyswitch in ALTER position) by using the DATA and ENTER keys. The four keys labeled BINARY, BIT, HEX, DECIMAL determine the Loader/Monitor's mode of operation. The A, B, C, D, E, and F keys are used to enter hexadecimal information.

If the DATA key is mistakenly struck, then the DATA mode can be exited by pushing the DATA key again.

4.1 Decimal Mode

For normal operation, the Loader/Monitor will be in the decimal mode. When first initialized it automatically enters the decimal mode. Registers are addressed, and data displayed, in the decimal numbering system. If the Loader/Monitor is in another mode, it can be returned to the decimal mode by depressing the DECIMAL key.

4.2 Hexadecimal Mode

Depressing the HEX key puts the Loader/Monitor in the hexadecimal mode. All functions are the same as when operating in decimal mode, except all data is displayed and entered using the hexadecimal numbering system.

4.3 Bit Mode

Placing the Loader/Monitor in the BIT mode allows the user to display the ON-OFF status or alter a single I/O point or bit of any given register.

4.4 Binary Mode

Once the desired data in a register is displayed, the binary equivalent of that decimal or hexadecimal number can be shown by depressing the BINARY key. In this mode, 16 ones and zeros will appear, representing the binary data in the register.

5.0 DISPLAY

A bright fluorescent display is visible in any type of lighting environment. This display not only shows numerical data, but is also capable of displaying alphanumeric messages generated by the processor.

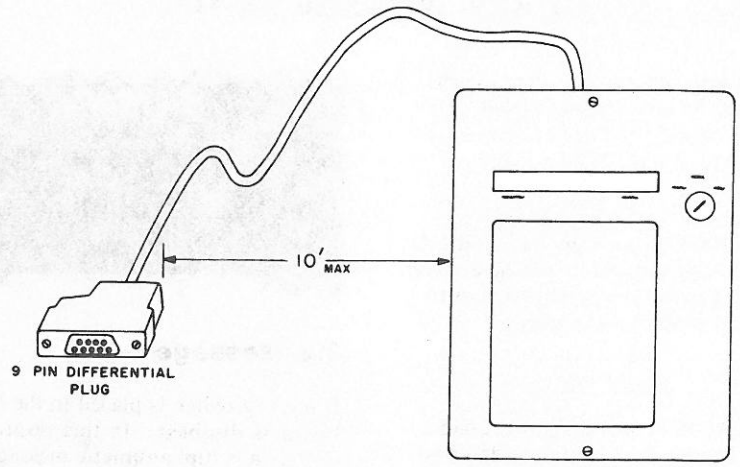

6.0 CONNECTIONS

A single 9 pin differential plug provides the only needed connection to the processor. All communications and necessary power are provided through this connector. The Loader/Monitor plugs directly into the PROGRAMMER or COMM port on the processor via this plug. No additional interface or AC power source is needed.

The addition of a power supply and special cabling enables the mounting distance to be extended up to 10,000 ft. See Appendix A.

7.0 POWER-UP

Because no additional power source is needed for the Loader/Monitor, it will automatically power up when connected to the processor. Initially the display will show "SY/MAX REV __" where the __ will contain a software revision letter or number, e.g., E, 1.1, etc. This letter identifies the specific version of operational software contained in the unit. All keys on the keypad will be disabled except for the CLEAR ENTRY key. Depressing the CLEAR ENTRY key will put the Loader/Monitor in the decimal mode; the register address value will set to ØØØ1, with its contents appearing in the DATA window.

ØØØ1	DEC	ØØØØØ
REGISTER		DATA

(The data displayed for register 1 will be ØØØØ provided all of the inputs and outputs assigned to register 1 are OFF.)

8.0 DISPLAY DATA (DECIMAL)

The following example outlines the steps for displaying data in the decimal mode.

NOTE: The keyswitch must be in either the MONITOR or ALTER positions.

KEY OPERATION	DISPLAY	DESCRIPTION
1. Depress CLEAR ENTRY Key	ØØØ1 DEC ØØØØØ (Register / Data)	REGISTER address display is set to ØØØ1
2. Enter register address to be monitored (i.e. register 17)	ØØ17 DEC Ø41Ø2 (Register / Data)	The data display indicates that the decimal number in register S17 is 41Ø2

ENTERING AN INVALID ADDRESS WILL CAUSE THE LOADER/MONITOR TO DISPLAY "ILLEGAL ADDRESS".

Subsequent register data can be displayed by depressing the CLEAR ENTRY key again and entering in the next address to be monitored. The Loader/Monitor will immediately index to that address and display the register's contents.

Registers can be sequentially displayed by depressing the Arrow keys. Each time the Arrow keys are depressed, the register address will increment or decrement by one and the DATA display will show the new data value. Holding either key down will cause the Loader/Monitor to rapidly increment or decrement the register address.

8.1 Display Data (Hexadecimal)

If is it desired to display data in hexadecimal format, simply depress the HEX key before entering in the register address. When this is done, the value in the data window will be the hexadecimal equivalent of the decimal number in that register. The Arrow keys operate as described in paragraph 8.0.

9.0 ALTER DATA (DECIMAL)

The following example outlines the steps for entering data into any given register. Protected registers, fenced registers and Processor/Local Interface control registers cannot be altered.

NOTE: Keyswitch must be in ALTER position to enter data.

KEY OPERATION	DISPLAY	DESCRIPTION
1. Depress CLEAR ENTRY Key	ØØØ1 DEC ØØØØØ Register Data	REGISTER address display is set to ØØØ1
2. Enter register address containing the data to be changed (i.e. register 20)	ØØ2Ø DEC ØØ127 Register Data	Loader/Monitor displays current data in register S20 (in this case, 127)
3. Depress DATA Key	ØØ2Ø DEC ØØ127 Register Data	Right-most digit flashes, indicating that data can now be entered.
4. Enter data (i.e. 2047)	ØØ2Ø DEC Ø2Ø47 Register Data	Number shifts in from right of DATA window
5. Depress ENTER Key	ØØ2Ø DEC Ø2Ø47 Register Data	Number entered into Register S20

9.1 Alter Data (Hexadecimal)

To enter Hexadecimal data, first depress the HEX key before entering the register address. Then follow steps 3, 4, and 5 of paragraph 9.0.

9.2 Altering Timer/Counter Decode Values

Since both timer and counter decode values are entered as fixed values when programming timer and counter rungs, they are not alterable by the Loader/Monitor. Therefore, to provide Loader/Monitor — accessible decode points, the recommended approach would be to program an IF comparison rung in addition to the timer or counter rung. The IF rung would compare the timer or counter value to a storage register to provide another decoded output. The Loader/Monitor may then be used to alter the data in the storage register, thereby changing the decode point. For additional information, refer to the CRT or Hand-Held Programmer Instruction Bulletin.

10.0 DISPLAY DATA (BINARY)

Once a desired register is addressed and its contents displayed, the binary equivalent of the data can be shown in the display window. This mode is useful to monitor the ON-OFF status of 16 external I/O or internal output points, as well as counter and timer information.

Example: To display the data in register 23 in binary format:

KEY OPERATION	DISPLAY	DESCRIPTION
1. Depress CLEAR ENTRY Key	ØØ2Ø DEC Ø2Ø47 Register Data	REGISTER address counter sets to the last register in which data has been entered
2. Enter register address to be monitored (i.e. register S23)	ØØ23 DEC ØØ999 Register Data	Indicates that the decimal number in register S23 is 999
3. Depress BIN Key	ØØØØØØ11111ØØ111 Register Data	Display shows the combination of 16 ones and zeros which are the binary equivalent of the decimal number 999

NOTE: To display another register, the DECIMAL or HEX key must be pushed in order to enter another register address.

Individual BITS within the register can be altered by depressing the DATA key. See Section 11.0.

NOTE: Keyswitch must be in the ALTER position to enter data.

11.0 ALTER DATA (BINARY)

Bits of Processor/Local Interface, Control Registers, Protected Registers, and Fenced Registers cannot be altered.

NOTE: Keyswitch must be in the ALTER position to enter data.

When the DATA key is depressed (still in BINARY mode) the right-most digit will flash, indicating the Loader/Monitor will now accept data. The right-most BIT can now be altered. At this time the only numerical keys which are active are the 1 and the 0 keys. If another BIT is to be altered, pushing the Left/Up Arrow Key will cause the next significant BIT of flash. This indicates that the second significant BIT can be altered by entering a 1 or a 0. Each time the Left/Up Arrow Key is depressed, the flashing digit will move one space to the left; each time the Right/Down Arrow Key is depressed, the flashing digit will move to the right. The digit which is flashing is the BIT to be altered. After the Left/Up Arrow Key is depressed 16 times, the flashing digit will loop around back to the least significant BIT on the right. Once the display has been changed to the desired BIT pattern, the ENTER key must be pushed to transfer the data into the processor. Once ENTER has been pushed, no digits will flash, indicating that the new data has been loaded. Depressing the CLEAR ENTRY key anytime prior to pushing ENTER will set the flashing digit to the right-most position and restore the original data.

EXAMPLE:

To change BIT 3 of register S18 from a Ø to a 1.

KEY OPERATION	DISPLAY	DESCRIPTION
1. Depress CLEAR ENTRY Key	ØØ23 DEC ØØ999 Register Data	REGISTER address display is set to the last address for which data was altered
2. Enter register address containing the data to be altered	ØØ18 DEC ØØØØØ Register Data	Indicates that the decimal number in register 18 is 0000
3. Depress BIN Key	ØØØØØØØØØØØØØØØØ Register Data	Current binary value in register 18
4. Depress DATA Key	ØØØØØØØØØØØØØØØØ Register Data	Rightmost bit flashes, indicating data can now be entered
5. Depress the Left/Up Arrow Key twice	ØØØØØØØØØØØØØØØØ Register Data	Moves flashing digit to 3rd position
6. Depress 1 Key	ØØØØØØØØØØØØØØ1ØØ Register Data	New data value placed in 3rd bit position (1 is now flashing)
7. Depress ENTER Key	ØØØØØØØØØØØØØ1ØØ Register Data	Flashing bit stops flashing. This indicates that the data has loaded into the processor

When in the binary mode of operation, the entire display is used to show the BIT pattern (16 ones and zeros) of a given register. Therefore the register address and mode of operation cannot be shown. To change an address, the user must first enter another mode (DECIMAL, HEX, or BIT) so he can then enter another address.

12.0 DISPLAY DATA (BIT)

The BIT mode lets the user access data BITS within a register one at a time. This mode is most useful for displaying the ON-OFF status of a single external I/O point or internal output. When the BIT key is depressed, the register that was last displayed remains in the address window. The word "BIT-" is displayed where the word "DEC" or "HEX" would normally appear. Following the dash is the number Ø1, indicating that the data BIT displayed is the least significant BIT of the selected register.

For register S9, ØØØ9 BIT — Ø1 Ø

Register Mode Bit # Data

The right-most digit (DATA) will contain a 1 or 0 representing the status of the BIT. If an internal or external I/O address is being displayed, 1 indicates the particular I/O is ON or energized, 0 indicates that the I/O is OFF or de-energized.

Pushing the Left/Up Arrow Key increments the BIT number and the new data is displayed at the right. Each time the Left/Up Arrow Key is pushed the BIT number increments by one.

EXAMPLE:

Display BIT 5 of Register S52

KEY OPERATION	DISPLAY	DESCRIPTION
1. Depress BIT Key	ØØ18 BIT-Ø1 Ø Register Data	Loader/Monitor enters BIT mode (displays the same register which was last displayed)
2. Enter Address to be Monitored (i.e. S52)	ØØ52 BIT-Ø1 Ø Register Data	Display shows current status of BIT 1 register S52
3. Push Left/Up Arrow Key 4 times	ØØ52 BIT-Ø5 1 Register Data	BIT number increments to BIT 5 and the DATA of 1 indicates this BIT is ON or energized

If BIT 16 is displayed and the Left/Up Arrow key is pushed, the register address will increment by one and BIT-Ø1 will be displayed for the next register. If BIT-Ø1 is displayed and the Right/Down Arrow key is pushed, the register address will decrement by one and BIT-16 will appear. Holding the Arrow keys down will rapidly increment or decrement the display.

If an invalid address is entered while in the BIT mode, "ILLEGAL ADDRESS" will be displayed.

13.0 ALTER DATA (BIT)

New BIT data can be entered via the following steps.

NOTE: Keyswitch must be in ALTER position to enter data. Bits of Protected Registers, Fenced Registers and Processor/Local Interface Control Registers cannot be altered.

EXAMPLE:

Change BIT 2 of Register S75 from 1 to Ø.

KEY OPERATION	DISPLAY	DESCRIPTION
1. Depress BIT Key	ØØ52 BIT-Ø1 Ø Register Data	Displays last register which was shown
2. Enter register address (i.e. 75)	ØØ75 BIT-Ø1 Ø Register Data	Display shows status of BIT Ø1 register S75
3. Depress Left/ Up Arrow Key once	ØØ75 BIT-Ø2 1 Register Data	Display shows status of BIT Ø2 register S75
4. Depress DATA Key	ØØ75 BIT-Ø2 1 Register Data	Status of BIT 2 flashes indicating the DATA can now be changed
5. Depress 0	ØØ75 BIT-Ø2 Ø Register Data	New DATA of BIT 2 appears in window (still flashing)
6. Depress ENTER	ØØ75 BIT-Ø2 Ø Register Data	The new DATA is loaded into the processor; DATA stops flashing

14.0 REGISTER CAPACITY

Any register monitored contains 16 BITS of information. Based on the address selected, this information can represent:

1. External I/O (i.e. a group of 16 inputs and outputs)
2. Internal I/O (i.e. a group of 16 relay equivalents)
3. Data (i.e. a number within the register representing a timer value, counter value, math function, shift register data, etc.)

Data within any given register is stored in binary form, but can be displayed on the Loader/Monitor in binary, hex, or decimal format.

In the binary mode, data can range from 1111111111111111 to ØØØØØØØØØØØØØØØØ.
In the hexadecimal mode, data can range from FFFF to ØØØØ.
In the decimal mode, data can range from -32,768 to 32,767.

The left-most (most significant) BIT of the data register is used as the sign (–) BIT, when displaying numbers in the *decimal* mode. When a negative number is displayed or entered, the most significant BIT of the register will be one (1). Therefore any numbers larger than *7FFF (HEX)* or Ø111111111111111 (Binary) will appear as negative when displaying them in the decimal mode. This method of storing negative decimal data is referred to as "two's complement". For further explanation of two's complement, refer to Appendix A of the CRT or Hand-Held Programmer Instruction Bulletin.

15.0 MESSAGE MODE

The capabilities of the Loader/Monitor can be extended beyond data entry and monitoring functions when put in the message mode. Placing the keyswitch in the MESSAGE position transforms the Loader/Monitor into an alpha-numeric display, thus enabling the user to perform alarm annunciation and report generation at no extra cost. By utilizing a special PRNT command in the processor's user program, any English language command up to 16 characters can be displayed. This message can be triggered by a control action of the processor to produce messages such as "HIGH TEMP ALARM" or "CONVEYOR 9 DOWN" for alarm annunciation. Numbers contained in data registers can also be printed on the display. This makes report generation messages such as "PARTS COUNT 4193" or "TIME 12.09" possible. Several PRNT statements can be programmed to produce extended messages by scrolling them across the screen or by flashing up successive messages.

NOTE: Refer to the CRT programmer instruction bulletin for PRNT statement format. The port to which the Loader/Monitor is connected to must be outputting the PRNT message at 9600 BAUD.

NOTE: In Loader/Monitors with series designations A, B, C, or D, a disable contact from an external I/O must be programmed in series with the PRNT INITIATE contact in the PRNT rung. The external I/O disable contact must be opened before the keyswitch of the Loader/Monitor is switched out of the message mode. This external contact serves to disable the PRNT message transmission when the keyswitch is placed in the Monitor or Data Enter position. If this is not done, the Loader/Monitor may lock up and can only be cleared by disconnecting power from the Loader/Monitor.

Example:

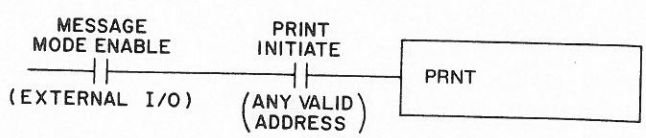

16.0 ERROR MESSAGES

ILLEGAL ADDRESS — User attempted to enter an invalid register number (refer to Programmer Instruction Bulletin for proper register addressing).

ILLEGAL DATA — User attempted to enter data greater than 32,767 or less than -32,768.

FENCED — User attempted to enter data into a register which has been protected (fenced) by the programming equipment.

PROTECTED — 1) User attempted to enter data into registers 8001 thru 8192 (NOT ALLOWED). 2) User attempted to enter data after the REGISTER PROTECT command was entered by the programming equipment.

READ ONLY — User attempted to write to an external input.

FORCED — 1) User attempted to change the status of an output while the processor was in HALT. 2) User attempted to change the status of an I/O which had been forced by the programming equipment.

ROM CHECKSUM — Self test error-faulty Loader/Monitor.

Note: Depressing the CLEAR ENTRY key will clear the error message and restore original data, (if in the data mode) or display the last selected register (if in the display mode).

17.0 NEMA 12 COVER

The Class 8010 Type SLM-100 Loader/Monitor may be mounted in the Class 8010 Type SLM-110 NEMA 12 Cover. When the cover is mounted on to a NEMA 12 cabinet, NEMA 12 protection is provided to the Loader/Monitor. The cover includes a plexiglass window to see the Loader/Monitor display, and a lockable door assembly used to access its keyboard. A user-supplied padlock may be used to restrict access to the keyboard.

Weight	9.5 lb./4.32 kg.
Overall Dimensions (W x H x D)	10.25 x 13.55 x 4.50 inches 26.04 x 34.42 x 11.43 cm
Mounting Dimensions (W x H)	7.00 x 12.55 inches 17.78 x 31.88 cm

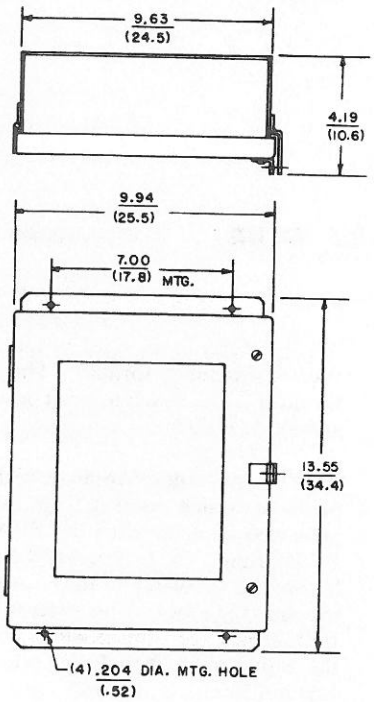

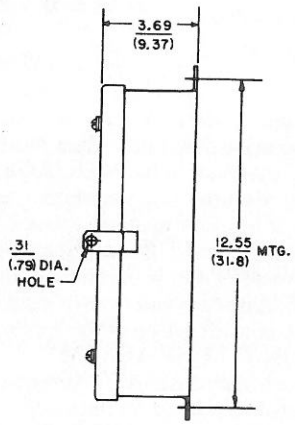

APPENDIX A
REMOTE MOUNTING

It is possible to locate the Loader/Monitor up to 10,000 feet from the processor. This appendix will serve as a guide for wiring the remote Loader/Monitor (see Figure A.1). Because the Loader/Monitor is located remotely from the processor, a second source of 5 volts must be supplied. The Class 8030 Type PS-10 or Type PS-40 Power Supply is recommended, however, another commercial equivalent could be used, provided it is 5 volt DC capable of 1.0 amp at 50°C, 50/60 cycle.

Necessary Equipment:

Belden #8723 or #8728 Cable

1 Amphenol DE9P (Male) or equivalent

1 Amphenol DE9S (Female) or equivalent

Class 9080 Type GM3 Terminal Block or equivalent

2 Cinch DE51218-1 (Covers)

2 ITT CANNON DE 51224-1
(Slide Lock Connector)

1 Class 8030 Type CC-40 with a PS-10 or PS-40 or minimum 16 AWG wire if equivalent Power Supply is used

1 Class 8030 Type PS-10 or PS-40 or equivalent

9 two inch 22 AWG wires

The connection between the 8030 PS-10 or PS-40 and SY/MAX Processor must be constructed by the user. The connections are shown in Figure A.2.

NOTE: Pin 9 (shield) must be carried through the entire cable.

The DC power is supplied to the Loader/Monitor via pins 5, 6, 7, and 8.

For proper mounting of the PS-10 or PS-40 Power Supply see the Power Supply Instruction Bulletin 30598-156-XX.

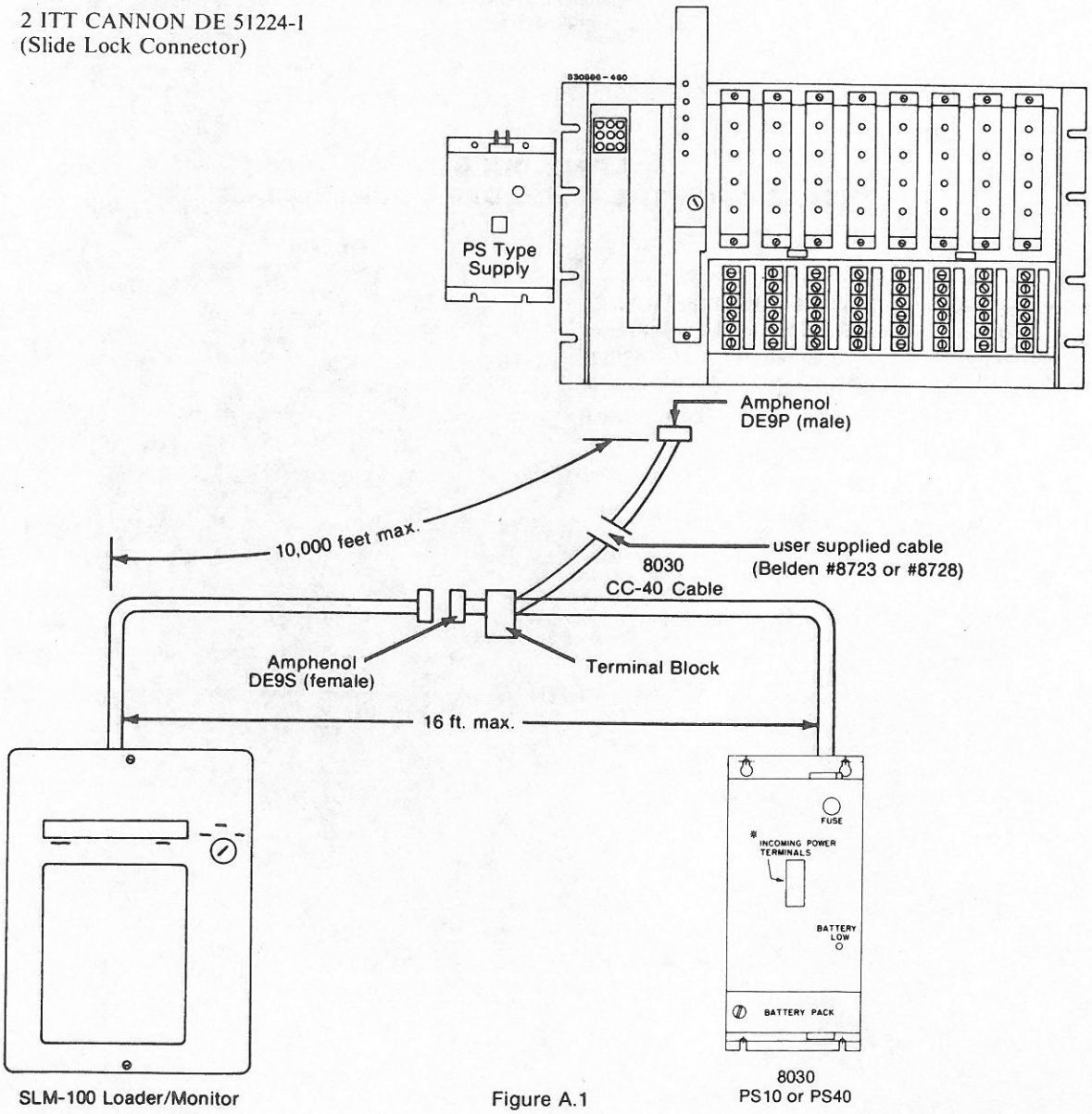

Figure A.1

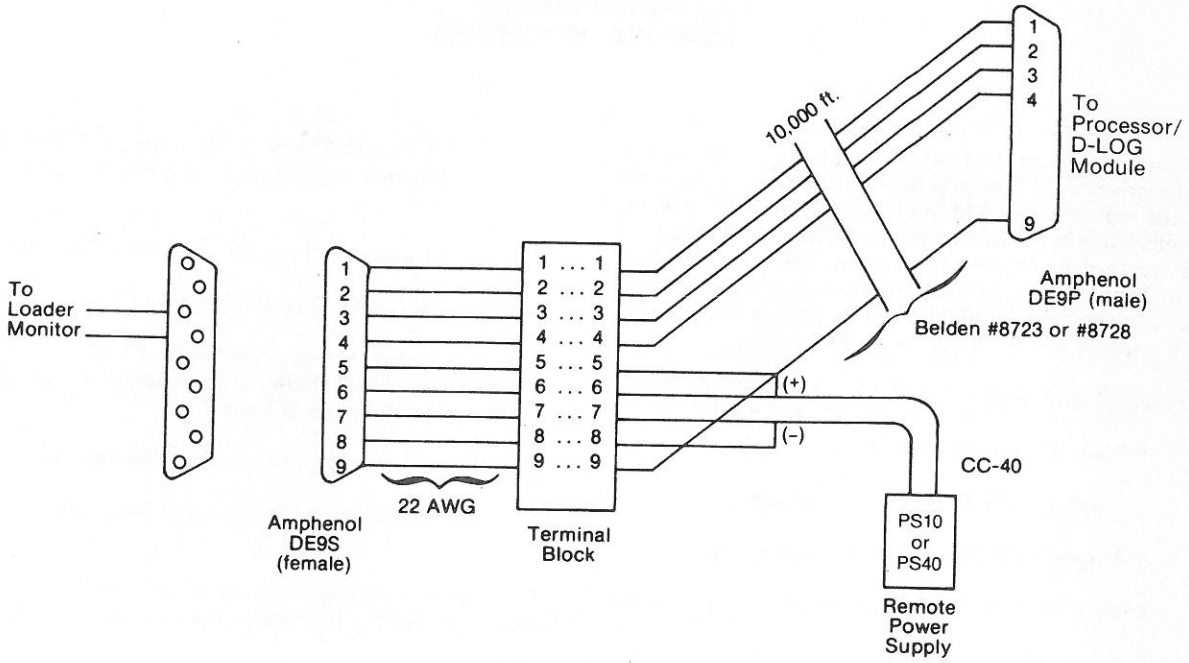

CONNECTIONS
Figure A.2

APPENDIX B
DISPLAY FOR THE D-LOG DATA CONTROLLER

The Loader/Monitor may be used to display PRNT messages generated by the Class 8030 Type DLM-110 or Type DLM-120 D-LOG Data Controller Modules. An external 5 volt power supply is necessary. The same configuration and connections may be used as in Figure A.1 and A.2 (see Appendix A).

Instruction Bulletin

Subject: **SY/MAX®**

CLASS 8030 TYPE PS-10, 20, 30, 40, 50, 60 AND 70 POWER SUPPLIES

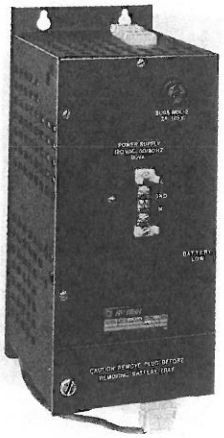

Figure 1
PS-10, 20, 40, 50, and 70 Power Supply

DESCRIPTION

The Class 8030 Type PS-10, 20, 30, 40, 50, 60, and 70 Power Supplies are used to provide power to SY/MAX Programmable Contoller Systems. The power supplies are available in three input voltage types: 120 VAC, 240 VAC, and 24 VDC. Three output capacity sizes are available — approximately 64, 128, and 512 I/O. See "POWER SUPPLY SELECTION" (Page 4) for proper sizing of power supply to application. Each power supply includes overvoltage and overcurrent protection.

The power supply includes a removable Battery Pack. In the event of power loss, size D alkaline batteries are used to provide back-up power to retain programs and registers (data, timers, and counters) which may be stored in random access memory (RAM). Included on the power supply front panel are: (1) fuse for incoming power (except PS-30 and PS-60), (2) terminal block for connection of incoming power, and (3) a red LED for indication of "BATTERY LOW" status. The top of the power supply includes connector(s) which are used to attach the power supply cable(s) feeding the rack assemblies.

TYPES PS-30 AND PS-60 POWER SUPPLIES

The PS-30 and PS-60 Power Supplies have all the features of the power supplies listed above with the addition of: (1) illuminated ON-OFF switch/circuit breaker (in place of a fuse) for incoming power, (2) two 120 VAC convenience receptacles with an output current of 15A total (PS-30 only), and (3) a 12 VDC power source required for the SY/MAX Model 700 Processor Bubble Memory Module.

SPECIFICATIONS

POWER SUPPLY TYPE	PS-10	PS-20	PS-30		PS-40	PS-50	PS-60		PS-70
Input Voltage Range	102-132 VAC (47-63 Hz)	102-132 VAC (47-63 Hz)	102-132 VAC (47-63 Hz)		204-250 VAC (47-63 Hz)	195-250 VAC (47-63 Hz)	195-250 VAC (47-63)		22.5-28 VDC*
Input Power Consumption	138 VA	90 VA	480 VA		138 VA	90 VA	480 VA		80 watt
Power Loss Ride Through (at full rated load)	0.5 ms (at 102 V)	16 ms (at 102 V)	16 ms (at 102 V)		0.5 ms (at 204 V)	16 ms (at 204 V)	16 ms (at 204 V)		16 ms (at 22.5 V)
Input Fuse Rating	1½ A 125 V	2 A 125 V	—		½ A 250 V	1 A 250 V	—		4 A 250 V
Input Fuse Type or Equivalent	BUSS MDL-1½	BUSS MDL-2	—		BUSS MDL-½	BUSS MDL-1	—		BUSS MTH-4
Circuit Breaker	—	—	6 A Thermal Trip		—	—	3 A Thermal Trip		—
Approximate I/O Capacity	64	128	512		64	128	512		128
Output Voltage Range	5.15 - 5.25 VDC		5.15 - 5.25VDC	12.4 - 12.6VDC	5.15 - 5.25 VDC		5.15 - 5.25VDC	12.4 - 12.6VDC	5.15 - 5.25 VDC
Output Current Capacity @ 40° C	4 A	12 A	23 A	2.2 A	4 A	12 A	23 A	2.2 A	10 A
Output Current Capacity @ 50° C	4 A	9 A	20.2 A	1.9 A	4 A	9 A	20.2 A	1.9 A	10 A
Output Current Capacity @ 60° C	3 A	7 A	17.4 A	1.6 A	3 A	7 A	17.4 A	1.6 A	7 A
Weight (unpackaged) lb./kg.	10.4/4.72	8.6/3.90	16.5/7.48		10.4/4.72	8.6/3.90	16.5/7.48		8.5/3.86

Ambient Temperature Rating..... 0-60° C*
Humidity Rating.....0-95% non-condensing
Battery Type .....Three MALLORY DURA-CELL® Size D Alkaline Batteries or equivalent
Battery Life-no load..... 3 years minimum at 25° C, 1 year at 60° C

Battery Life after Red "BATTERY LOW" LED Indicator Illuminates .....2 weeks minimum
Battery Life — with load (Processor RAM Memory Support Time) .... 1 year. See Figure 15 for derating.

*See Application Considerations

©Square D Company, 1983

NOTE: Only the Type PS-30 and PS-60 Power Supplies can be used for Model 700 applications. Due to increased I/O capacity, the PS-30 and 60 Power Supplies have six connectors for attaching power supply cables to rack assemblies. (See Figure 2)

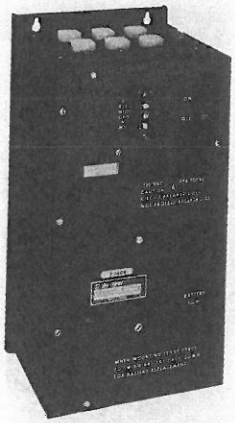

Figure 2
PS-30 Power Supply

MOUNTING INSTRUCTIONS

The Power Supply may be mounted either vertically or horizontally. If mounted vertically, orient the power supply such that the fuse or circuit breaker is toward the top. The power supply may be mounted directly alongside a SY/MAX rack assembly. See Figure 3.

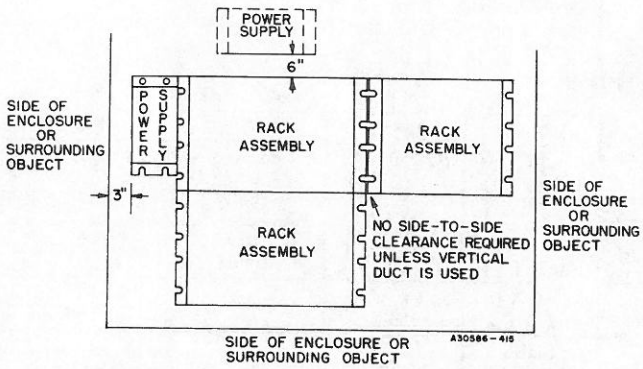

Figure 3
Power Supply Mounting

Leave a three inch clearance between the power supply and surrounding objects or the sides of the enclosure. In those installations where the SY/MAX power supply is to be mounted above the rack, leave a six inch clearance between the power supply and the rack (Figure 3). This spacing is required to maintain proper air flow around the system components, and for installation and removal of cables.

There should exist a minimum of six inch clearance between the power supply and any electro-mechanical device such as a motor starter.

Insure that the power supply is mounted within available cable distance from the rack assembly. See Figure 9 for power supply cable lengths. When determining cable length, allow for the bending of the cable at the connectors. Lengthening supply cables may decrease the maximum current capability of the power supply. For such applications consult Square D Company.

Care in locating the power supply in an enclosure must be taken to allow unobstructed insertion and removal of the battery pack from the power supply (See Figures 4 and 5 for dimensions.)

When mounting electro-mechanical devices above the power supply, a barrier between these devices and the power supply must be incorporated to prevent debris from falling onto the power supply.

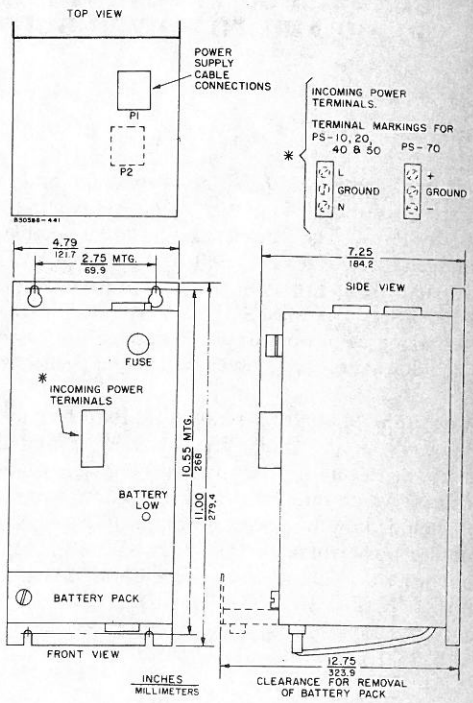

Figure 4
PS-10, 20, 40, 50, and 70
Power Supply Dimensions

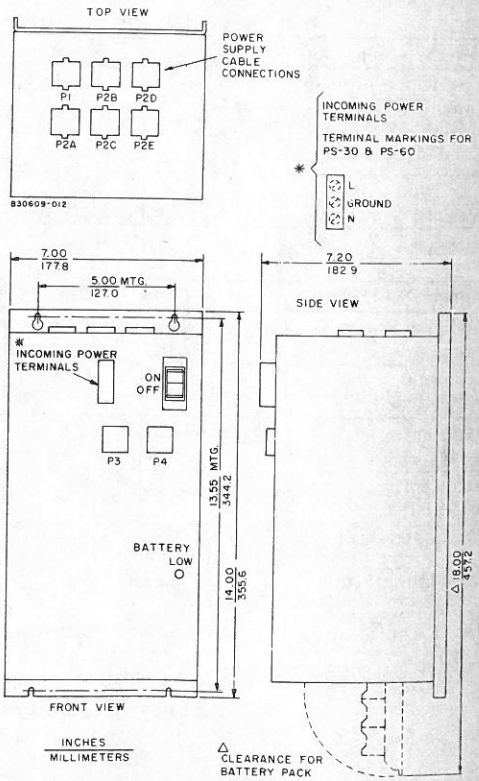

Figure 5
PS-30, 60 Power Supply Dimensions

WIRING INSTRUCTIONS

Observe the preceding recommendations when selecting a mounting location for the power supply. Using the slots in the mounting plate, mount the power supply with four 10-24 UNC mounting screws. **Be sure the mounting plate is tied to a "true-earth" ground either by direct mounting (use "star" washers) or by running a braided grounding strap from the power supply mounting plate to the ground.**

†Incoming power is wired directly to the terminal block on the front of the power supply. Be sure the ground terminal is wired directly to ground. The terminals will accept two #14 stranded or solid wires. Ring lugged wires may be used. A properly sized disconnect switch should be used as a means to remove power from the Programmable Controller System. An optional I/O power relay may also be used if it is desired by the user to require a manual restart of the Programmable Controller I/O System in the event of a power loss. See Figures 6 and 7.

Wire the power supply according to all applicable electrical codes.

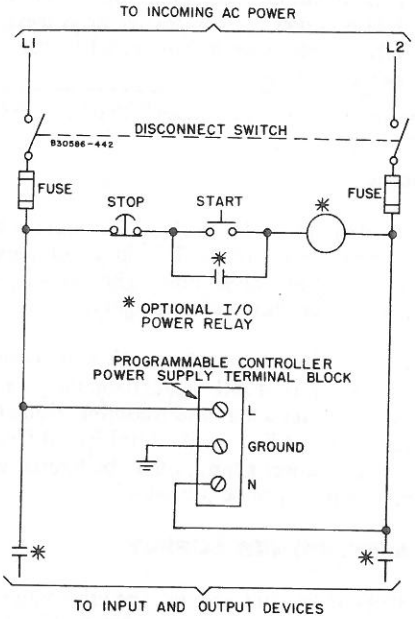

† Figure 6
Type PS-10, 20, 30, 40, 50, and 60
Power Supply Incoming AC Power Connection

Logic power is provided to the rack assemblies by way of one, two, or six connectors on the top of the power supply. Type PS-10 and PS-40 Power Supplies have one connector (labeled "P1"); Type PS-20, PS-50, and PS-70 Power Supplies have two connectors (labeled "P1" and "P2"); Type PS-30 and PS-60 have six connectors (labeled "P1" and "P2A" thru "P2E").

Class 8030 Type CC-10, CC-20, CC-21, CC-30, CC-31, and CC-40 Power Supply cables are used to provide power to the rack assemblies. Type CC-10 Power Supply cable must be used as the cable to the rack assembly containing the SY/MAX Model 300, 500, or 700 processor since this cable also contains the battery low signal for use by the processor. The 12 VDC power needed for the Model 700 Bubble Memory Module is only available from the PS-30 and PS-60 "P1" connector thru a Series B CC-10 cable. See Figures 8 and 9 for cable usage.

†The power supply cable connector labeled "P1" or "P2" must be attached to the appropriate connector on the power supply (see Figure 8). The connector labeled "PR1", "PR2", or "Rack" is attached to the rack assembly.

Be sure to observe the maximum current capacity of the power supply cables. Currents exceeding these maximum values may cause modules in the rack assembly to become inoperable.

Rack assemblies containing a SY/MAX Model 300, 500, or 700 Processor must be powered by the "P1" connection on the power supply with a CC-10 cable. A single power supply *cannot* power two or more processors.

NOTE: To maintain memory in a processor or other modules which require battery back-up, the cable from the power supply must remain connected to the rack assembly.

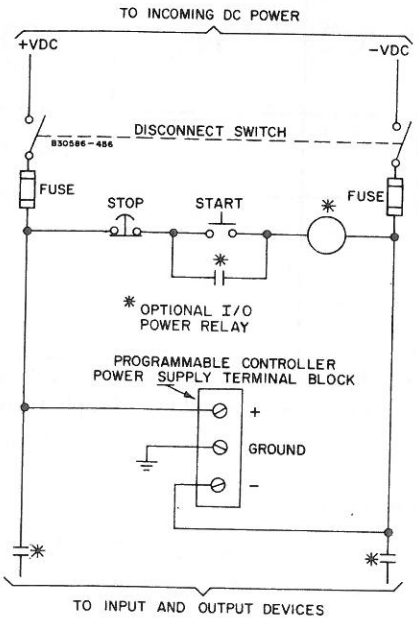

†Figure 7
Type PS-70 Power Supply
Incoming DC Power Connection

POWER LINE DISTURBANCES

Line voltage disturbances that exceed specifications of the power supply (see Page 1) may cause the Programmable Controller System to become inoperable or damaged. Such disturbances include: (1) high frequency power line transients that may be caused by lightning strikes or switching large loads, (2) line voltage fluctuations greater than the maximum input voltage of the power supply (surges), or less than the minimum input voltage with a duration greater than the given power loss ride-through time (brown outs) and (3) power outages (black outs) resulting from network overloads or damage to distribution systems.

For these noise and disturbance problems, TOPAZ* Power Peripherals are recommended. The TOPAZ ULTRA-ISOLATOR* suppresses both common and transverse mode noise usually recognized as decaying oscillatory transients and voltage spikes. TOPAZ Line 2* power conditioners not only attenuate most transients, but also stabilize line voltage fluctuations by extending the operating voltage range. To provide power to the programmable controller during black-outs, a TOPAZ Powermaker Micro-UPS* (Uninterruptable Power System) is recommended.

* Registered trademark of TOPAZ, Inc.
TOPAZ is a wholly owned subsidiary of Square D Company.
Consult Square D Company for more information.

CABLE	SERIES	PLUG INTO POWER SUPPLY CONNECTOR	CABLE LENGTH INCLUDING CONNECTORS	MAXIMUM CURRENT CAPABILITY	USAGE
CC-10	B	"P1"	36″ (91 cm)	25 Amps	Use only to connect the power supply to the first rack assembly which contains the processor module.
CC-20 ▲	C	"P2"	60″ (152 cm)	16 Amps	Use only to connect the power supply to the second rack assembly (which does not contain the processor module).
CC-21	B	"P2"	48″, 60″, 72″ (122, 152, 183 cm)	5, 4, 3 Amps	Three drop cable used to connect the power supply to rack assemblies which do not contain processor modules.
CC-30	A	"P2"	120″ (305 cm)	8 Amps	Use only to connect the power supply to the second rack assembly (which does not contain the processor module).
CC-31	A	"P2"	96″, 120″ (244, 305 cm)	10, 8 Amps	Two drop cable used to connect the power supply to rack assemblies which do not contain processor modules.
CC-40	A	"P1"	72″ (183 cm)	3 Amps	Cable contains only +5 VDC and common. It is used to connect the power supply to rack assemblies for supplying power to TTL I/O modules. When this cable is used, no other cables may be connected to the power supply.

▲ Series C CC-20's are 60″. Series A and B are 42″. A series A Type PS-20 Power Supply requires a pre-series B Type CC-20 Cable. A series B or later Type PS-20 Power Supply requires a series B or later CC-20 Cable.

Figure 8 — Power Supply Cable Usage

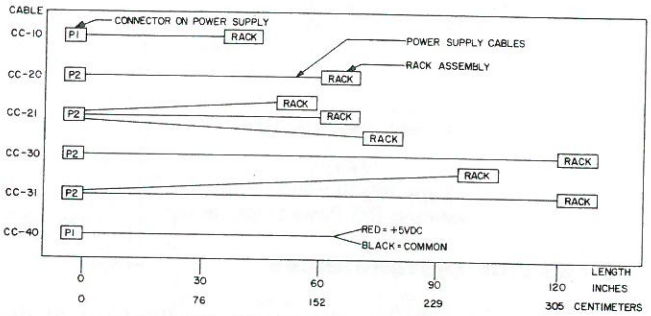

Figure 9
Power Supply Cable Lengths

POWER SUPPLY SELECTION

For proper operation, the correctly sized Type PS Power Supply must be used with the Programmable Controller System. To determine power supply loading, total the "Rated Current Draw on SY/MAX Power Supply" from the devices used in the Programmable Controller System. See Figure 10 for Rated Current Draw values. Select the proper size power supply making sure that the total Rated Current Draw is less than the power supply output capacity as shown in the SPECIFICATIONS Section (See Page 1).

The Rated Current Draw for each I/O module is based on a duty cycle of either 75% or 100%. 75% duty cycle means that the I/O are "on" 75% of any given time. The majority of applications fall into the 75% duty cycle category.

NOTE: Because certain modules (indicated by asterisks on Figure 10) utilize the AC-FAIL signal from the power supply, a single supply can power a maximum combination of ten (10) of these modules. Depending on the total Rated Current Draw calculated, certain power supplies may be limited to powering less than ten of these specific modules.

USE AS A TTL POWER SUPPLY

A Class 8030 Type CC-40 Cable may be used with a Class 8030 Type PS Power Supply to provide power to TTL I/O module. When used as a TTL I/O power supply, the Class 8030 Type PS Power Supply may only be used for that purpose. No other cables may be connected to the power supply.

CLASS	TYPE	DESCRIPTION	CURRENT DRAW 75% DUTY CYCLE	CURRENT DRAW 100% DUTY CYCLE
8030	CIM-101	120 VAC/VDC Input Module	30mA	30mA
8030	CIM-131	12-24 VAC/VDC Input Module	30mA	30mA
8030	CIM-141	48 VAC/VDC Input Module	30mA	30mA
8030	CIM-151	TTL Input Module	20mA	20mA
8030	CIM-161	240 VAC/VDC Input Module	30mA	30mA
8030	CIM-191	Simulator Input Module	35mA	40mA
8030	DIM-101	120 VAC/VDC Deluxe Input Module	50mA	60mA
8030	DIM-141	6-48 VAC/VDC Deluxe Input Module	50mA	60mA
8030	DIM-161	240 VAC/VDC Deluxe Input Module	50mA	60mA
8030	COM-221	120 VAC Output Module	125mA	145mA
8030	COM-231	240 VAC Output Module	125mA	145mA
8030	COM-241	9-55 VDC Output Module	115mA	135mA
8030	COM-251	60-160 VDC Output Module	195mA	245mA
8030	COM-261	TTL Output Module	120mA	145mA
8030	COM-271	Reed Relay-Form A Output Module	285mA	350mA
8030	COM-281	Reed Relay-Form B Output Module	285mA	350mA
8030	COM-291	Simulator Output Module	55mA	65mA
8030	DOM-221	120 VAC Deluxe Output Module	125mA	145mA
8030	DOM-231	240 VAC Deluxe Output Module	125mA	145mA
8030	DOM-241	9-55 VDC Deluxe Output Module	115mA	135mA
8030	DOM-251	60-160 VDC Deluxe Output Module	195mA	245mA
8030	DOM-225	120 VAC-5 A Deluxe Output Module	100mA	100mA
8030	DOM-235	240 VAC-5 A Deluxe Output Module	100mA	100mA
8030	GOM-221	120 VAC Isolated Output Module	125mA	145mA
8030	CRM-115	Bus Expander/Driver Interface Module	320mA	320mA
8030	CRM-116	Bus Expander/Terminator Interface Module	100mA	100mA
†8030	CRM-210	Local Interface W/512 Registers	1600mA	1600mA*
†8030	CRM-211	Local Interface W/4096 Registers	1600mA	1600mA*
†8030	CRM-220, 222	Remote Interface	1000mA	1000mA*
8030	CRM-510	SY/NET Network Interface	950mA	950mA*
8030	HIM-101	8 Function 120 VAC/DC Input	60mA	70mA
8030	HIM-131	8 Function 12-24 VAC/DC Input	65mA	70mA
8030	HIM-141	8 Function 48 VAC/DC Input	65mA	70mA
8030	HIM-151	8 Function TTL Input	32mA	32mA
8030	HIM-161	8 Function 240 VAC/DC Input	65mA	70mA
8030	HIM-191	8 Function Simulator Input	40mA	40mA
8030	HOM-221	8 Function 120 VAC Output	225mA	270mA
8030	HOM-211	8 Function 12-50 VAC Output	220mA	265mA
8030	HOM-231	8 Function 240 VAC Output	225mA	265mA
8030	HOM-241	8 Function 9-55 VDC Output	250mA	275mA
8030	HOM-251	8 Function 60-160 VDC Output	385mA	455mA
8030	HOM-261	8 Function TTL Output	225mA	275mA
8030	HOM-271	8 Function Reed Relay — Form A Output	525mA	625mA
8030	RIM-121	4 Function Standard Analog Input	800mA	800mA*
8030	RIM-122	4 Function Deluxe Analog Input	800mA	800mA*
†8030	RIM-131	High Speed Counter	1200mA	1200mA*
8030	RIM-141	BCD Multiplex Input	750mA	750mA*
8030	ROM-121	4 Function Standard Analog Output	1500mA	1500mA*
8030	ROM-122	4 Function Deluxe Analog Output	2000mA	2000mA*
†8030	ROM-141	BCD Multiplex Output	900mA	900mA*
8030	DLM-110	D-Log Data Controller	725mA	725mA*
8030	SLM-100	Loader/Monitor	600mA	600mA
8030	SPR-100	Hand-Held Programmer	1000mA	1000mA
8020	SCP-311, 312, 313, 321, 322, 323	Model 300 Processor with RAM Memory	1500mA	1500mA*
8020	SCP-332, 333	Model 300 Processor with UVPROM Memory	2000mA	2000mA*
8020	SCP-344	Model 300 Processor with RAM/UVPROM Memory	2000mA	2000mA*
8020	SCP-521, 522, 523, 531, 532, 533	Model 500 Processor	4000mA	4000mA*
8020	SCP-721, 722, 723, 724	Model 700 Processors	4300mA	4300mA*
8020	SMM-710	Model 700 Small Bubble Memory	2000mA	2000mA*
8020	SMM-720	Model 700 Large Bubble Memory	2200mA	2200mA*

*A maximum combination of 10 of these modules can be powered from a single power supply.

Figure 10
Rated Current Draw on SY/MAX Power Supply

† Minor Rev. - 1/84

BATTERY MAINTENANCE, REMOVAL AND REPLACEMENT

In the event of a power outage, each Class 8030 Type PS Power Supply contains batteries used to retain the memory of a processor or other modules which require battery back-up. Supplies without batteries installed may be used to power rack assemblies that do not require battery back-up. The three batteries in the battery pack should be replaced upon detection of the red "BATTERY LOW" LED indication on the power supply or after the rated life. Battery performance characteristics are indicated in the SPECIFICATIONS Section (page 1). Use the following procedure to replace batteries.

1. Have a fresh set of three batteries available. See SPECIFICATIONS section for type.

   NOTE: To prevent losing the contents of the processor memory or other modules with memory, make sure the power supply is powered up, and all supply cables are connected securely.

2. Disconnect the Battery Pack Power Cable from the Battery Pack. See Figure 11. (This step does not apply to PS-30 and PS-60 Power Supplies.)

3. Loosen the Battery Pack retaining screw and remove the Battery Pack from the power supply by pulling outward. See Figure 12. (The Battery Pack on the PS-30 and PS-60 will swing down. See Figure 13.)

4. Remove the three batteries from the Battery Pack.

5. Insert three fresh batteries into the Battery Pack. **Observe proper polarity!** See Figure 14.

6. Reinsert the Battery Pack into the power supply and retighten the Battery Pack retaining screw.

7. Reconnect the Battery Pack Cable. (Does not apply to PS-30 and PS-60 power supplies.)

   NOTE: When the batteries are removed from the power supply, the "BATTERY LOW" LED will iluminate. When fresh batteries are installed and the Battery Pack Cable is reconnected, the "BATTERY LOW" LED may remain illuminated for up to 15 seconds before resetting.

PS-10, 20, 40, 50, and 70 Power Supply Battery Pack

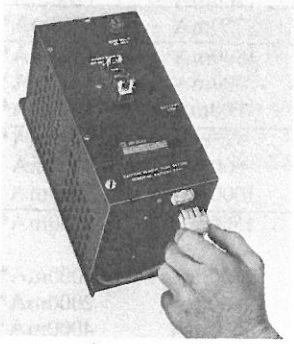

Figure 11
Cable Disconnection

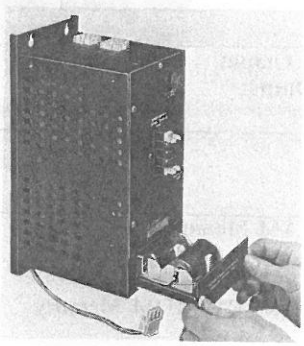

Figure 12
Battery Pack Removal

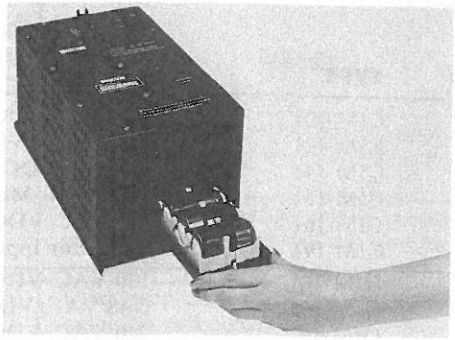

Figure 13
PS-30, 60
Power Supply Battery Pack Removal

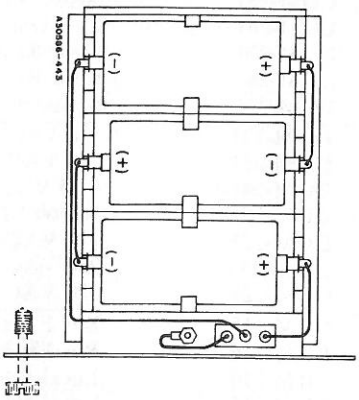

Figure 14
Battery Orientation in Battery Pack

POWER SUPPLY REPLACEMENT

If it becomes necessary to replace the power supply (thereby removing power *and* battery back-up to the rack assembly), the contents of any RAM memory may be lost.

NOTE: If the only RAM memory on a rack assembly is contained in a processor, capacitors within the processor will maintain the memory for a maximum of 1 minute after the removal of power. Therefore, the power supply may be replaced without loss of processor memory. The replacement power supply should be positioned within cable reach of the Type CC-10 Power Supply Cable connected to the rack assembly *before* attempting replacement so that the new power supply can be connected without delay.

APPLICATION CONSIDERATIONS

- All AC Power wires should be kept isolated from (1) SY/MAX Power Supply cables, (2) DC signal wiring, and (3) rack to rack communication cables. AC and DC signal wires should NOT be combined in the same wire troughs or bundled together for parallel runs (right angle crossovers should be used for wires crossing each other). This minimizes the chance of coupling electrical noise into the system.

- Only SY/MAX Programmable Controller devices may be connected to the Class 8030 Type PS Power Supplies.

- Battery capability to support SY/MAX Programmable Controller Systems decreases with battery age even in no load situations. See Figure 15 for battery derating curve.

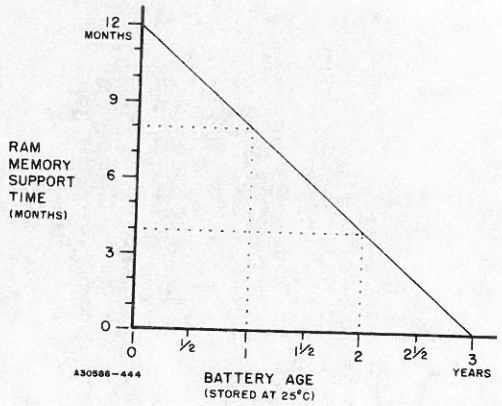

Figure 15
RAM Memory Support Time vs Battery Age Derating Curve

- When using the Type PS-10, 20, 30, 40, 50, and 60 Power Supplies, incoming power must consist of a sinusoidal AC wave form with frequencies of 47 to 63 Hz. Square wave or sine wave inputs with other frequencies should not be used.

- When using the Type PS-70 Power Supply, incoming power must not exceed 32 VDC maximum peak (including ripple).

- The "BATTERY LOW" LED indicator on the front of the power supply will not function in the absence of proper incoming power to the power supply. e.g.: Under power loss conditions, the "BATTERY LOW" LED will *not* annunciate a battery low condition.

- When the batteries are used in an ambient temperature environment continuously exceeding 45°C (113°F), they should be examined every six months for evidence of corrosion and replaced if necessary. Do not rely on the "BATTERY LOW" indicator, since battery output voltage is not necessarily related to corrosion.

- The convenience receptacles on the Type PS-30 Power Supply have a total maximum output current of 15A at 120 VAC. NOTE: The power supply Thermal Trip Circuit Breaker does not protect the convenience receptacles.

†• In PC systems with multiple power supplies, it is important to maintain a single ground point — a building column or grounding electrode determined to be a "true earth" ground.

SQUARE D COMPANY

Instruction Bulletin

Subject: **SY/MAX®**

CLASS 8030 TYPE HRK-100, 200
8 FUNCTION I/O RACK ASSEMBLY

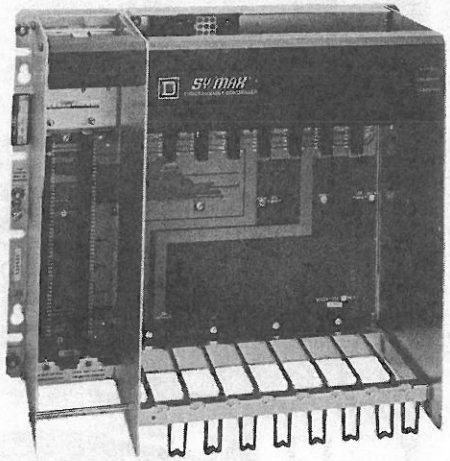

DESCRIPTION

The Type HRK-100, 200 I/O Rack Assemblies provide the mounting slots for the Type HIM and HOM Eight (8) function digital I/O modules. The Type HRK-100 can accommodate up to 8 modules (64 I/O points) while the Type HRK-200 has 16 I/O module slots (128 I/O points). Both rack assemblies are otherwise the same.

The rack assemblies are separated into two sections by a vertical divider plate (Figure 1). The section to the left of the divider plate provides two mounting slots for a SY/MAX Model 300 processor and/or other register modules. The far left slot is the register slot, while the slot adjacent to the divider plate is the CPU slot.

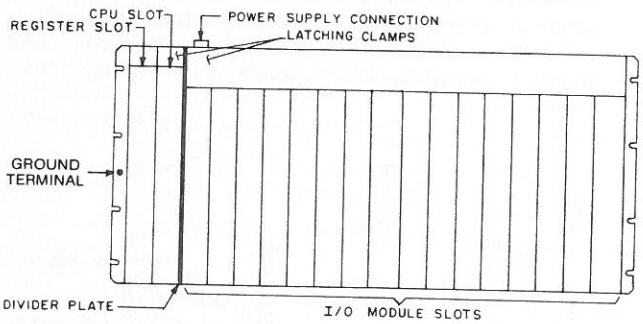

Figure 1 — Type HRK Rack Slot Identification

The power supply connector located on the top of the I/O rack provides the power for the I/O logic. Power is also provided for the processor of a Model 300 system through this connector. See Instruction Bulletin 30598-156 for proper power supply sizing.

The modules to be mounted in the CPU and Register slots will vary, depending on the processor and system configuration being used (Model 300, 500, 700). The eight or sixteen slots to the right of the divider plate house the Type HIM and HOM digital I/O modules.

A latching clamp (Figure 2) is located at the top of each section of the rack assembly. By sliding the pull pins toward each other, the clamp is unlatched and can be pivoted up to allow the modules to be inserted into the rack. When a module is inserted into its slot (either section of assembly), the screw on the bottom of that module must be tightened to the rack to insure proper operation and grounding. By closing and latching the clamp over the top of the module, the module is properly secured within the rack assembly.

Nylon wire routing clips are provided to help route the input and output field wires to the proper I/O module. After the rack assembly has been mounted, install the routing clips by inserting them in the holes at the bottom front edge of the rack. See Figure 3. Depending on the wire routing to the I/O modules, the clips may be installed to the right or left of each I/O slot. Series A rack assemblies have wire routing clips pre-installed to the left of each I/O slot.

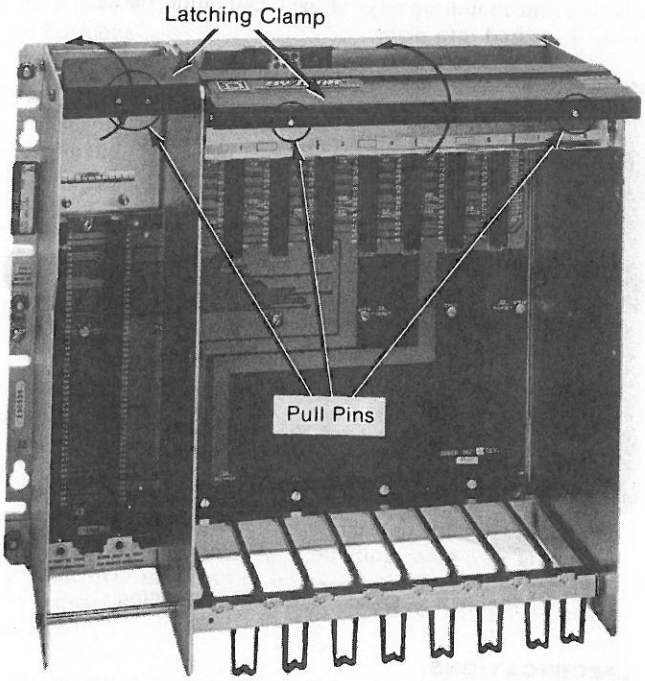

Figure 2 - Pull Pins and Latching Clamp Assembly

©Square D Company, 1985

Supersedes 30598-201-01, February, 1984
Printed in U.S.A.

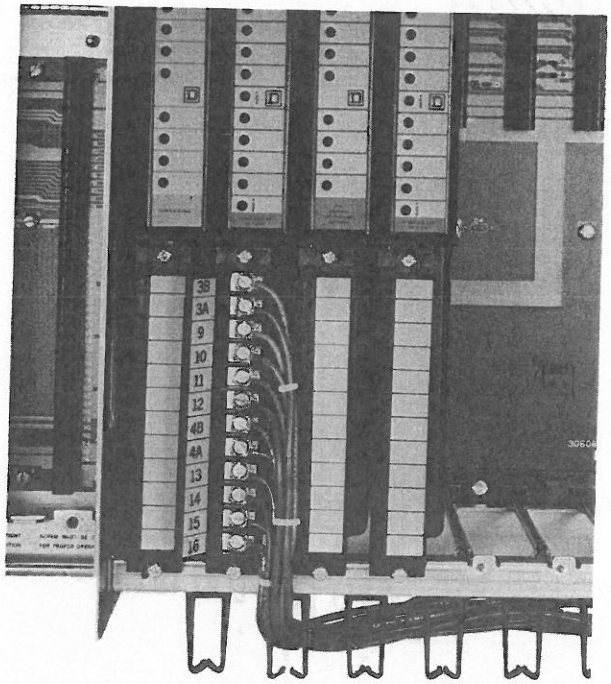

Figure 3 — Nylon Wire Routing Clip

A dead front cover (Figure 4) is provided with each type HRK-100, 200 rack assembly. Two mounting pegs are located on the lower front of the I/O section in the assembly. The type HIM, HOM I/O modules also provide a ridge for this cover. The grooved edge of the dead front cover is placed under the mounting pegs of the rack assembly. By snapping the top edge over the mounting ridge of the I/O module, the dead front cover is secured into place.

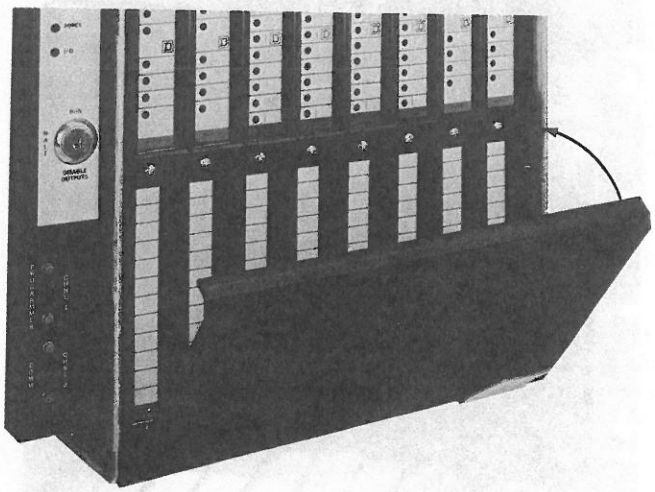

Figure 4 — Dead Front Cover Mounting

SPECIFICATIONS

I/O points per rack	HRK-100: 64 (8 Digital I/O modules) with register slot HRK-200: 128 (16 digital I/O modules) wth register slot
Size of wires each terminal will accept	2 - #14 AGW
Ambient temperature	0 to 60°C
Humidity	0 to 95%, non-condensing
Weight	HRK-100: 16.9 lb's/7.6 kg. HRK-200: 26.2 lb's/11.8 kg.
Rack will accept these modules	I/O slots: HIM-101, HOM-211, HIM-131, HOM-221, HIM-141, HOM-231, HIM-151, HOM-241, HIM-161, HOM-251, HIM-191, HOM-261, HOM-271, CPU SLOT: All SCP-3XX, CRM-222, CRM-232 Register SLot: RIM-121, ROM-121, RIM-131, ROM-131, RIM-144, ROM-141, ROM-151, DLM-110, DLM-120, CRM-510, CRM-210, CRM-211, CRM-310, CRM-530, CRM-720

APPLICATION CONSIDERATIONS

- The rack assemblies (Figure 5) can be mounted above each other or directly side by side. A minimum clearance of 4 inches is required between racks mounted above each other. Additional space between racks must be added to accommodate a horizontal wiring duct.

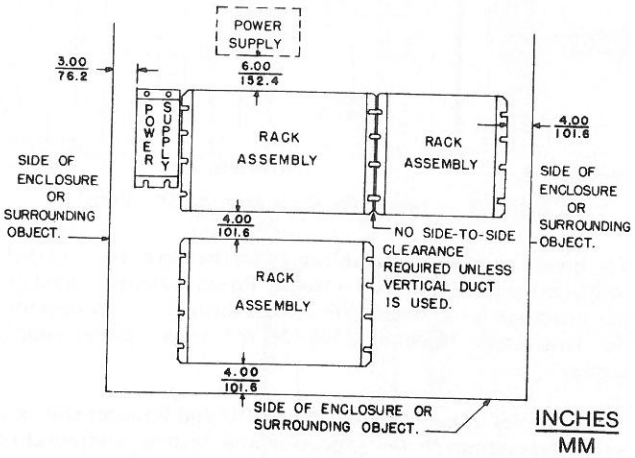

Figure 5 — Rack Assembly Mounting Configurations

- A minimum 4 inch clearance is required between the rack and surrounding objects or the sides of the enclosure.

- SY/MAX® power supplies may be mounted vertically directly adjacent to the rack assembly or horizontally above the rack. If mounted above the rack, a minimum clearance of 6 inches is required between the power supply and the top edge of the rack.

- Insure that the power supply is mounted within available cable distance from the rack assembly.

- Care in locating the rack in an enclosure must be taken to allow unobstructed insertion and removal of all modules.

- Leave a minimum of 6 inches between the rack and any electro-mechanical devices.
- When mounting electro-mechanical devices above the rack, a barrier between the two sections must be incorporated to prevent debris from falling onto the rack.
- To minimize electrical noise pick-up, all AC power wires should be kept isolated from: 1) DC signal wiring, 2) rack to rack communication cable, and 3) SY/MAX power supply cables. AC and DC signal wires should not be combined in the same wire troughs or bundled together for parallel runs (right angle cross-overs should be used for wires crossing each other).
- To maintain battery back-up (and thus maintain stored program information) for a Class 8020 SY/MAX processor module plugged into the rack assembly, the cable from the power supply MUST REMAIN CONNECTED TO THE RACK.

I/O RACK KEYING

Each I/O connector on the rack assembly may be keyed to accept only one type of I/O module. A keying pin kit, Class 8030 Type CBP-104, is available for this purpose. The correct position of the keying pin for the appropriate I/O module is described in Figure 6. The keying pin is inserted manually (Figure 7) into the slot in the rack connector using the insertion tool provided with the kit.

Type	Description	Insert Keying Pin Between These Positions	Type	Description	Insert Keying Pin Between These Positions
HIM-101	120V AC/DC Input Module	14 and 16	CRM-210	Local Interface	92 and 94*
HIM-131	6-24V AC/DC Input Module	8 and 10	CRM-211	Local Interface	92 and 94*
HIM-141	48V AC/DC Input Module	10 and 12	CRM-310	Fiber Optic Interface	76 and 78*
HIM-151	TTL Input Module	12 and 14	CRM-510	Sy/Net Interface	14 and 16*
HIM-161	240V AC/DC Input Module	16 and 18	DLM-110, 120	D-Log Data Controller	32 and 34*
HOM-211	12-50V AC Output Module	18 and 20	RIM-121	Std. Analog Input	82 and 84*
HOM-221	120V AC Output Module	20 and 22	RIM-131	High Speed Counter	12 and 14*
HOM-231	240V AC Output Module	22 and 24	RIM-144	BCD Multiplex Input	84 and 86*
HOM-241	9-55V DC Output Module	24 and 26	ROM-121	Std. Analog Output	90 and 92*
HOM-251	60-160V DC Output Module	26 and 28	ROM-131	Stepper Motor Output	8 and 10*
HOM-261	TTL Output Module	28 and 30	ROM-141	BCD Multiplex Output	80 and 82*
HOM-271	Reed Relay (Form A) Output Module	30 and 32			

* These modules are also keyed between positions 4 and 6.

Figure 6 — Keying Pin Positions

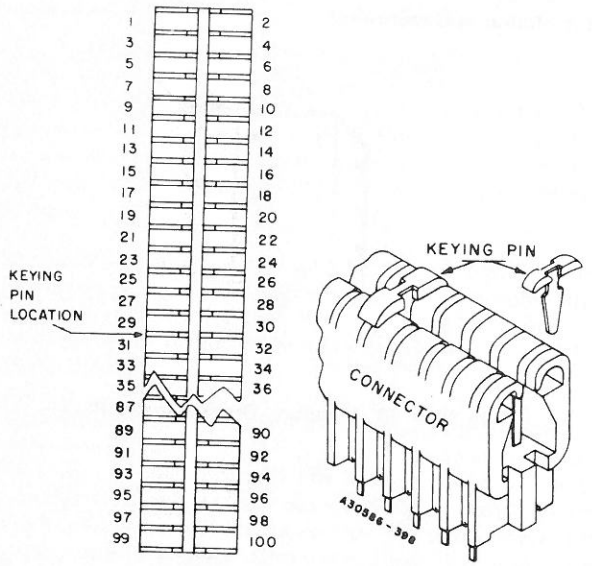

Figure 7 — Inserting Keying Pins

CAUTION: When inserting or removing the keying pins, use care to avoid touching the contact fingers within the connector. Improper insertion/removal may damage the connector.

INSTALLATION INSTRUCTIONS

Observe the preceding application considerations before selecting a mounting location for the rack assemblies. Using the slots in the mounting brackets, either rack or panel mount the rack assembly using 10-24UNC mounting screws. See Figures 8 and 9 for mounting dimensions.

If a Model 300 processor or any other module which utilizes the battery low signal is mounted in the rack, the rack must be connected to the "P1" connector of the power supply using a Type CC-10 cable. Care must be taken to insure that the power supply is mounted within cable length from the rack (See Instruction Bulletin 30598-156 for proper power supply cabling).

Be sure the rack assembly ground terminal, located on the left mounting bracket, is tied to a building column or grounding electrode determined to be a "true-earth" ground by means of wire equal in size to the incoming power wires (#14 guage minimum).

Prior to inserting the I/O modules into the rack, the rack may be keyed to accept only the module required for that slot. See I/O rack keying.

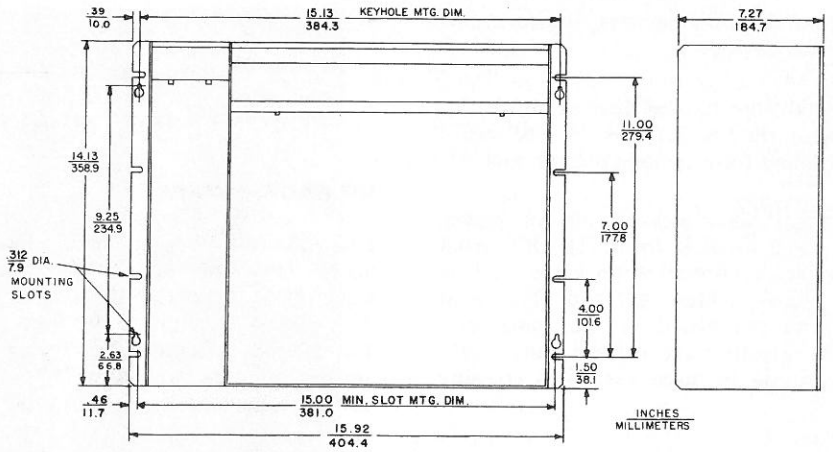

Figure 8 — 8030 HRK-100 Rack Assembly Mounting Dimensions

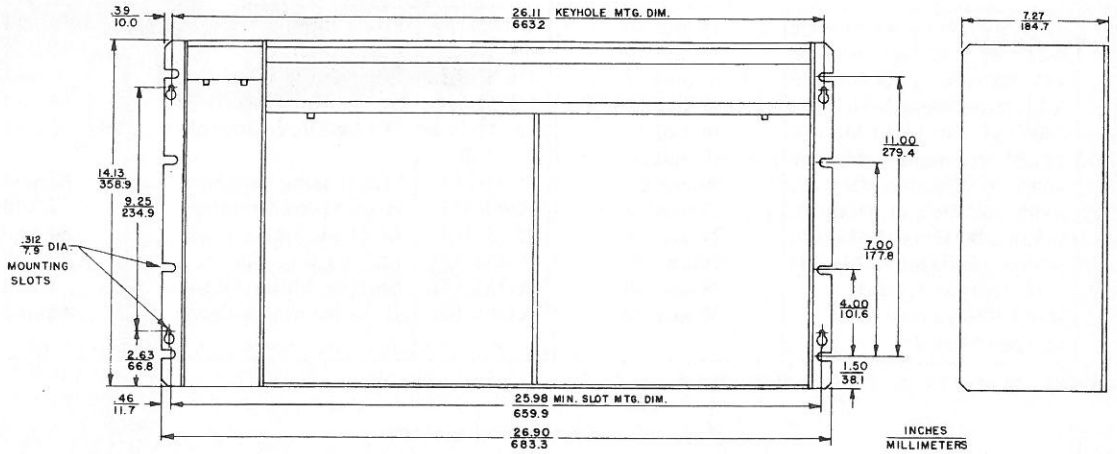

Figure 9 — 8030 HRK-200 Rack Assembly Mounting Dimensions

Optional mounting brackets are available to allow 19″ rack mounting of the 8030 HRK-100 rack. The 8030 CBP-113 19″ rack mounting kit contains brackets and hardware for this purpose.

NOTE: Series B and later 8030 HRK-100 racks are compatible with the 19″ mounting brackets. The 8030 HRK-200 rack assembly cannot be 19″ rack mounted.

To install 19″ mounting brackets, simply align brackets with holes on side of the rack and secure with supplied #8 mounting screws. See Figure 10. After brackets are installed, rack uses standard 19″ mounting dimensions as indicated in Figure 11.

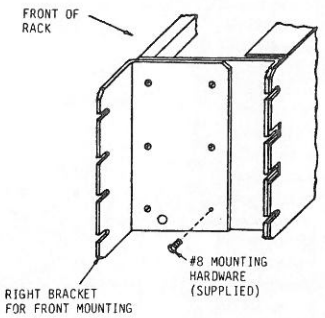

Figure 10 — 19″ Mounting Bracket Installation

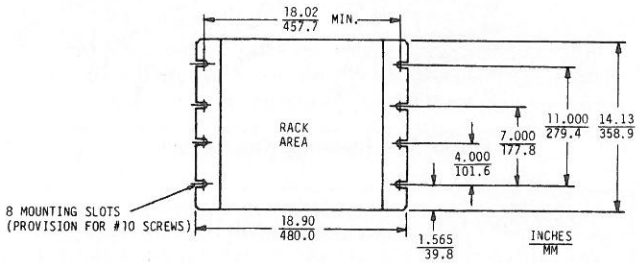

Figure 11 — 19″ Rack Mounting Dimensions

Instruction Bulletin

Subject: **SY/MAX®**

CLASS 8030 TYPE RIM-121
STANDARD ANALOG INPUT MODULE

DESCRIPTION:

The Class 8030 Type RIM-121 SY/MAX Standard Analog Input Module provides SY/MAX Family Programmable Controllers and Process Control Modules with the ability to receive standard electrical ranges of up to 4 high level analog input signals. This instruction bulletin describes the installation, programming, operation, and troubleshooting of the analog input module.

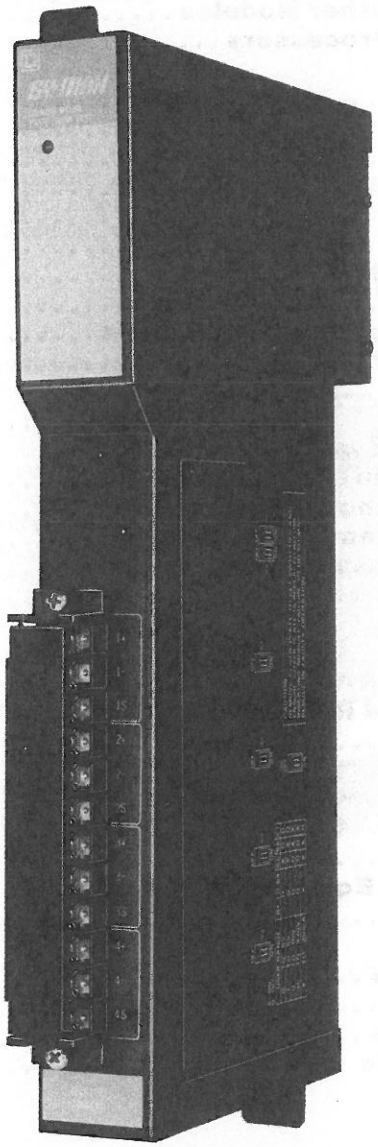

© Square D Company, 1984

TABLE OF CONTENTS

SECTION	TITLE	PAGE
1.0	DESCRIPTION OF CLASS 8030, TYPE RIM-121 MODULE	3
1.1	Introduction	3
1.1.1	GENERAL PURPOSE	3
1.1.2	GENERAL OPERATION	3
1.2	Front of Module	3
1.3	Side of Module	3
2.0	SPECIFICATIONS	4
2.1	Electrical Specifications	4
2.2	Physical Specifications	4
2.3	Environmental Specifications	4
2.4	Compatibility With Racks	4
2.5	Compatibility With Other Modules	4
2.6	Compatibility With Processors	4
3.0	INSTALLATION	4
3.1	Physical Inspection	4
3.1.1	NEW MODULE	4
3.1.2	REPLACING A MODULE	5
3.2	Keying	5
3.3	DIP Switch Setting	5
3.4	Field Wiring Terminations	5
3.5	Start-Up	5
3.5.1	NECESSARY PROCESSOR INSTRUCTIONS	5
3.5.2	NORMAL INDICATING LIGHTS	6
4.0	PROGRAMMING	6
4.1	Register Usage for System Addressing	6
4.1.1	STATUS AND ERROR REGISTER TABLE	6
4.2	Types of Programming Equipment	7
4.3	Connection of Programming Equipment	7
4.4	Program Steps	7
4.5	Example Programs	7
4.6	Program Editing	7
5.0	APPLICATION CONSIDERATIONS	7
5.1	Module Insertion and Removal	7
5.2	Wiring	7
5.3	Miscellaneous	8
6.0	TROUBLESHOOTING	8
6.1	Diagnostic Light	8
6.2	Using Programming Equipment	9
6.3	Erratic Operation	9
7.0	THEORY OF OPERATION	9
7.1	Block Diagram	9
7.2	Detailed Description	10
7.3	Simplified Schematic	10

1.0 DESCRIPTION OF SY/MAX FAMILY STANDARD ANALOG INPUT MODULE

1.1 Introduction

1.1.1. GENERAL PURPOSE

The Class 8030 Type RIM-121 Standard Analog Input Module provides the capability of inputting four channels of high level analog input signals (4-20 mA, 0-5 VDC, 1-5 VDC, 0-10 VDC, or ±10 VDC) to any SY/MAX Family Processor which possesses register I/O addressing capability, or to the SY/MAX Family Process Control Module. The analog module may be inserted into any slot of a register rack (except slot 1) or the register slot of a digital rack. Each module utilizes four registers in the system (one register per channel) in which the analog current or voltage being measured is converted to a value ranging from 0 to 9995, in increments of 5. This provides a register value in percent of full scale (2 decimal places). Simple programming techniques allow these input readings to be scaled to engineering values, provided the processor being used has math capability. The module requires no external power supply to operate (drawing its power from the SY/MAX Family power supply connected to the rack) and requires no additional components (such as current loop resistors). No user adjustment of span and zero is required, as automatic calibration is performed by the on-board microprocessor. A removable terminal strip facilitates quick replacement with no rewiring necessary.

1.1.2 GENERAL OPERATION

The Class 8030 Type RIM-121 module performs its tasks utilizing several subsystems. The analog to digital converter (A/DC) performs the actual conversion of the selected input channel, while the input multiplexer (MUX), under the control of the on-board microprocessor, performs the channel selection. The auto-calibration system (ACS) includes multiplexed zero and voltage references. The module also contains a DC-to-DC converter, along with signal and power isolation circuitry. For a block diagram of the operation, see Section 7.1.

1.2 Front of Module.

The front of the module shows a terminal strip and a RUN LED. The terminal strip contains four groups of three terminals; each group corresponds to one input signal or channel. One terminal exists for the positive wire of the signal source, one terminal for the negative, and the third terminal for the shield wire. For field wiring considerations, see Section 3.4.

The RUN LED indicates the digital logic circuitry in the module is functioning properly.

Figure 1

1.3 Side of Module

Accessible by removing the side cover plate are seven DIP switches which allow the user to select the desired range setting. This range setting will be common to all four channels on the module. See Section 3.3 for proper settings.

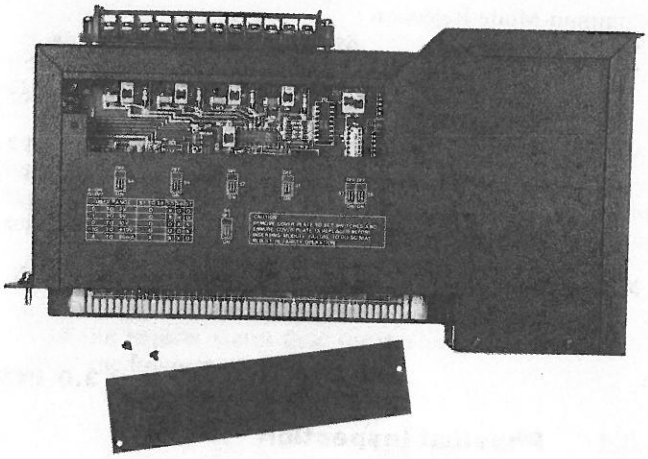

Figure 2

2.0 SPECIFICATIONS

2.1 Electrical Specifications

Inputs per module:	4 (the selected range will apply to all).
Ranges:	0-5 VDC, 1-5 VDC, 0-10 VDC, ±10 VDC, 4-20 mA.
Accuracy:	±0.1% at 25° C, ±0.5% (of full scale) over 0-60° C temperature range.
Resolution:	1 part in 2,000 (full scale range in the storage register of 0-9995, in increments of 5).
Under-Range Indication:	Converted to 0000.
Over-Range Indication:	Converted to 9999.
Conversion Rate:	5 conversions per channel per second (all 4 channels are updated every 200 milliseconds).
Isolation:	200V channel to ground (or analog input circuit to digital logic circuit) continuously applied. 1500V transient isolation.
Maximum Input Overload:	34 mA (current), 50 VDC (voltage), applied continuously to the input terminals.
Current Loop Resistors:	250 ohms ±.01%, 5 PPM/°C (resident in the module).
Power Requirement:	800 mA current draw from SY/MAX Family power supply connected to the rack.
Input Impedance:	.082μF in parallel with 5M ohms (voltage) or 250 ohms (current).
Common-Mode Rejection Ratio:	84 dB
A/D Converter Type:	Analog Devices Type 7550 (13-bit CMOS quad-slope A/D converter).
Multiplexer Type:	Harris Semiconductor Type 508B, 8 channel, single-ended CMOS MUX (the additional channels are used by the auto-calibration system).
Microprocessor Type:	Intel 8031 (controls the MUX, the A/D converter, the auto-calibration system, and diagnostics).
RUN Light:	Indicates digital logic circuitry is functioning properly.

2.2 Physical Specifications

Weight:	2.7 lbs (approximate), 1.2 kg.
Dimensions (WxHxD):	1.5 x 12.8 x 6.6 (in.) 3.8 x 32.5 x 16.8 (cm.)

†2.3 Environmental Specifications

Ambient Temperature Ratings:	0-60°C (operational) Storage Temperature −40 to +100°C
Humidity Rating:	5-95%, relative humidity (non-condensing)

2.4 Compatibility with Racks

RRK-100, RRK-200 (except the first slot)
HRK-100, HRK-200 (register slot only)
CRK-210, CRK-300 (register slot only)
DRK-210, DRK-300 (register slot only)
GRK-110, GRK-210 (register slot only)

2.5 Compatibility with Other Modules

Class 8040 Type PCM-110 (Process Control Module)

2.6 Compatibility with Processors

The following Class 8020 Type SCP programmable controllers:
311 and 312 (Series E and later)
323 and 344 (Series C and later)
313, 321, 322, 332, 333 (Series D and later)
All Model 500 programmable controllers.
All Model 700 programmable controllers.

3.0 INSTALLATION

3.1 Physical Inspection

3.1.1 NEW MODULE

As packaged, the module requires no additional components to function, and has no manual adjustments for setting zero and span. This is performed by the automatic calibration system. The user should not, however, plug the module into a rack before completing the following compatibility checks explained in their parenthetical references:

The proper range for the application is available (Section 2.1).
The proper range is selected (Section 3.3).
The processor is compatible (Section 2.6).
The rack and necessary slot is available (Section 2.4).
The SY/MAX Family power supply is adequately sized (Instruction Bulletin 30598-156-02 or later).
The rack is not keyed to prevent module insertion (Section 3.2).
Field wiring terminations are understood (Sections 3.4 and 5.2).
The required programming, especially system addressing, is understood (Section 3.5.1, Section 4, Instruction Bulletin 30598-165-02 or later or 30598-167-01 or later).

The module is installed by aligning the edge connector with the slot provided in the rack, and inserting the card so that it snaps into place. The module should then be secured to the rack with the captive fastening screw on the bottom.

CAUTION: The module should not be inserted or removed while the rack is powered up, or while wires carrying input signals are connected to the module. See Section 3.5 for general start-up procedures and Section 5.1 for application considerations regarding module insertion.

†Minor Rev. 5/84

3.1.2 REPLACING A MODULE

A module may be quickly and easily replaced with another module. There is no need to rewire the analog input points as the terminal strip may be removed by simply loosening the screws which secure this strip (Figure 3). The user must be certain that the DIP switches are properly coded for the desired range. No software re-programming is necessary. See Section 5.1 for application considerations regarding module insertion and removal.

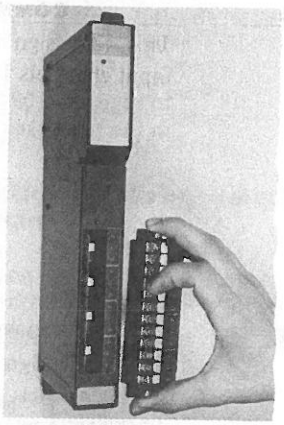

Figure 3

†3.2 Keying

A particular slot on the rack assembly may be keyed to accept only the RIM-121 module. A keying pin kit, Class 8030 Type CBP-104, may be used to insert a keying pin between pins 82 and 84 of the appropriate slot, as described in the register rack Instruction Bulletin #30598-265. The same procedure also applies to the register slot of any digital rack.

We recommend that the factory installed keying pins not be removed from the register slots, as they ensure proper alignment between slot pins and edge connector pads as the module is inserted or removed.

3.3 DIP Switch Setting

Removing the large cover plate of the side of the module allows user access to DIP switches for selecting the desired current or voltage range. The selected range will be common to all four channels. These settings should never be changed while the module is powered up. See Figure 4 for the appropriate settings; note especially the labeling and orientation of the switches.

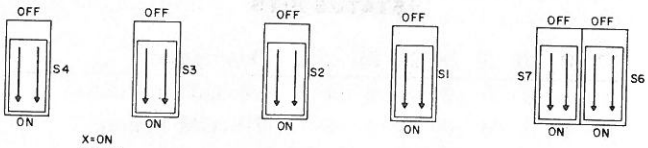

X=ON
O=OFF

USER RANGE			S1 TO S4	S5	S6	S7
0	TO	5V	O	X	O	O
1	TO	5V	O	X	X	O
0	TO	10V	O	O	X	X
-10	TO	+10V	O	O	O	X
4	TO	20mA	X	X	X	O

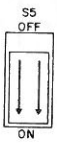

B30609-076

CAUTION:

REMOVE COVER PLATE TO SET SWITCHES AND ENSURE COVER PLATE IS REPLACED BEFORE INSERTING MODULE. FAILURE TO DO SO MAY RESULT IN FAULTY OPERATION.

Figure 4

3.4 Field Wiring Terminations

Each analog input signal is wired to a group of three front terminals. The plus and minus terminals for the respective channels indicate the polarity of the analog input signal. The "S" terminal is provided for the shield wire of each analog input. It is recommended that the wiring used be shielded twisted pair (Belden 8760 or equivalent) with the shield being connected at the analog input module *only.* The user should note that all four minus terminals share a common analog ground. See Section 5.2 for a discussion of wiring considerations.

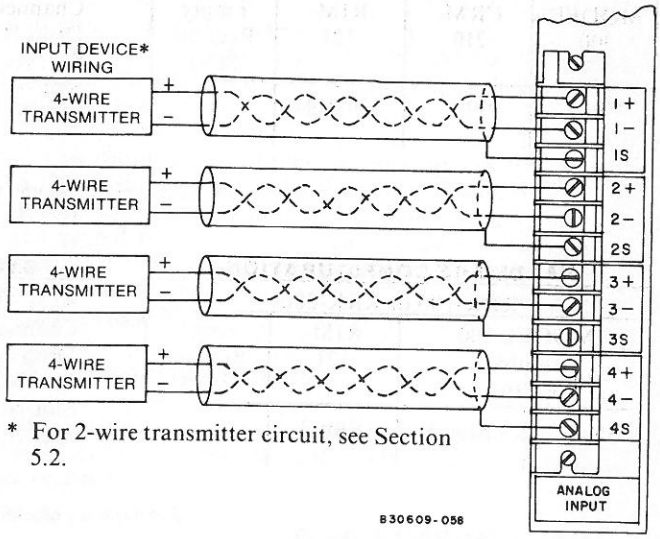

* For 2-wire transmitter circuit, see Section 5.2.

Figure 5

3.5 Start-Up

†3.5.1 NECESSARY PROCESSOR INSTRUCTIONS

After observing the conditions outlined in Section 3.1.1, with rack power off, and with no input signals connected to the terminals of the module, the module may now be inserted into the appropriate slot. If the systems addressing has been correctly assigned to recognize the module in that particular slot and the analog input module's microprocessor is functioning properly, upon power-up bits 25 to 32 of the register status field for the assigned registers will reflect the following code:

11000001
[Bit 32] [Bit 25]

If the above bit pattern is not found in the expected registers, then either the system has been misaddressed or the module has failed its initialization sequence and is sending back an alternate bit pattern to describe the nature of the failure. See Section 4.1.1 for an explanation of the error codes. The module's RUN light may also fail to illuminate.

It is possible that the user will see non-zero values contained in the data field of those processor registers which are monitoring the analog input channels, even when those channels have no input signals connected to them. This is not unusual when operating on any of the voltage range settings, due to the nature of the CMOS multiplexing circuitry.

HARDWARE CONFIGURATION

CRK,DRK,GRK,or HRK Rack		
RIM-121	MODEL 300	Digital I/O Slots
Register Slot	CPU Slot	

SYSTEM ADDRESSING

CPU Slot 0
Channel 0
Drop Number 0
Slot Number 1 108
Slot Number 2 112

COMMENTS

This will assign analog input channels 1-4 to registers 109-112 in the processor.

Example 1 - Model 300 in a Digital I/O Rack With Register Slot

HARDWARE CONFIGURATION

RRK-100 or RRK-200			
MODEL 300	CRM-210	RIM-121	Empty Register Slots
Slot 1	Slot 2	Slot 3	

SYSTEM ADDRESSING

CPU Slot 0
Channel 0
Drop Number 0
Slot Number 1 —
Slot Number 2 108
Slot Number 3 112

COMMENTS

This will assign analog input channels 1-4 to registers 109-112 in the processor.

Example 2 - Model 300 in a Register Rack

HARDWARE CONFIGURATION

RRK-100 or RRK-200			
MODEL 500 (double width)		RIM-121	Empty Register Slots
Slot 1	Slot 2	Slot 3	

SYSTEM ADDRESSING

CPU Slot 0
Channel 0
Drop Number 0
Slot Number 1 460
Slot Number 2 —
Slot Number 3 464

COMMENTS

This will assign analog input channels 1-4 to registers 461-464 in the processor.

Example 3 - Model 500 in a Register Rack

Should the user wish to be more systematic about checking out the operation of these modules, the above test configurations and systems addressing assignments may be used. These are only intended as examples of possible configurations which may be used for familiarization purposes; final actual system layout is dependent upon the user's proper understanding of the system definition or rack addressing as outlined in Instruction Bulletin 30598-165-02 or later or 30598-167-01 or later.

†3.5.2 NORMAL INDICATING LIGHTS

Illumination of the green RUN light indicates the onboard microprocessor is functioning properly, but does not automatically mean that any incoming analog signals are being properly converted. One of the following situations may exist:

1. The slot into which the module is inserted may be misaddressed.
2. The user may be operating in a range other than what was intended.
3. The pattern of the range switch settings may be invalid.
4. The module may be experiencing one of several miscellaneous non-fatal errors.

See Section 4.1.1 for possible error code conditions, and Section 6 for troubleshooting procedures.

4.0 PROGRAMMING

4.1 Register Usage for System Addressing

Each analog input module will occupy four registers of the system. These four registers should be assigned to the slot in which the module is inserted, and will exist even if some of the channels remain unused.

4.1.1 STATUS AND ERROR REGISTER TABLE

This section describes the possible codes which may be found in bits 25 through 32 of the status field of the assigned registers, generated by the analog input module's on-board microprocessor.

†STATUS BITS

32	31	30	29	28	27	26	25	Description
1	1	0	0	0	0	0	1	Normal Operation
0	1	1	0	0	0	1	0	EPROM Failure
0	1	1	0	0	0	0	0	DC-DC Failure
0	1	1	0	0	0	0	1	Range Switch Settings Invalid
0	0	0	1	0	1	0	0	No card acknowledged in slot
0	1	1	0	1	0	0	1	Diagnostics in progress
0	0	0	0	0	0	0	0	Slot not addressed

See Section 6.2 for further explanation of these conditions.

4.2 Types of Programming Equipment

Programming may be accomplished with any series of Class 8010 Type SPR-300 or SPR-500.

The following listing summarizes the necessary series designation for other programming equipment.

Class 8010	Type SPR-200	Series H or later (Rev. 1.4)
Class 8010	Type SPR-201	Series D or later (Rev. 1.4)
Class 8010	Type SPR-210	Series H or later (Rev. 1.4)
Class 8010	Type SPR-211	Series D or later (Rev. 1.4)
Class 8010	Type SPR-250	All Series
Class 8010	Type SPR-251	All Series
Class 8010	Type SPR-260	All Series
Class 8010	Type SPR-261	All Series

4.3 Connections of Programming Equipment

Proper programming equipment is to be connected to the processor which controls the slot to which the analog input module is inserted. The module cannot be interrogated separately.

4.4 Program Steps

The values stored in the analog input registers may be utilized as would any storage register value, i.e. in IF's, LET's, COMMS statements, etc. Valid data as contained in the storage registers will range from 5 through 9995 in increments of 5. Thus, the value stored in the register reflects to two decimal places the percentage of the selected range input signal being received. The values 0 and 9999 indicate under-range and over-range conditions, respectively, indication that the signal being inputted falls at the limits or outside the selected range.

4.5 Example Programs

In many cases, the user will wish to scale the incoming signal to reflect the actual voltage or current values being received. The table below indicates the resolution provided with the respective signal ranges, and demonstrates mathematically how the register values may be scaled or converted to their actual input values. The same technique is used to convert a register value to engineering units such as degrees Fahrenheit or Centigrade.

For the following examples assume register 109 contains the signal being measured by the analog input channel, and register 100 contains the mathematical result which has been scaled to reflect the actual voltage or current being input, and that these registers are used strictly for this purpose. Note that a value of 0 or 9999 in register 109 could be flagged as a limit or out-of-range condition.

4.6 Program Editing

Ladder rung statements containing analog input registers may be edited as would any statement containing other storage registers.

RANGE	PROGRAM RUNG	RESULT	RESOLUTION PROVIDED BY ANALOG INPUT MODULE
4-20mA	LET S100 = S109 ÷ 5x8 + 4,000	Read Register 100 in micro-amps	8 micro amps per bit
1-5 VDC	LET S100 = S109 ÷ 5x2 + 1,000	Read Register 100 in millivolts	2 millivolts per bit
0-5 VDC	LET S100 = S109 ÷ 2	Read Register 100 in millivolts	2.5 millivolts per bit
0-10 VDC	LET S100 = S109	Read Register 100 in millivolts	5 millivolts per bit
±10 VDC	LET S100 = S109x2 — 10,000	Read Register 100 in millivolts	10 millivolts per bit

5.0 APPLICATION CONSIDERATIONS

†5.1 Module Insertion and Removal

As noted in Section 3.5.1, the rack should be powered down prior to module insertion. Insertion or removal of a module while the rack is under power may induce a bus error, causing the processor which is addressing the card to go HALT, with the indication of an I/O error. If the processor keyswitch is in RUN, the user should attempt to clear the error by toggling the processor keyswitch momentarily to HALT and then back to RUN. If this fails to clear the error, turn the keyswitch back to HALT and cycle power on the processor and the RIM-121 module. If the error persists, remove power from the rack and attempt to re-seat the module. Similarly, when swapping modules, power should be removed from the rack to avoid the possibility of generating a bus error.

Factory installed keying pins should not be removed from the register slots, as they ensure proper alignment between slot pins and edge connector pads. Removal of the keying pins leaves open the possibility that the module may be inserted or removed at some angle other than straight on, resulting in a mismatch of slot pins and edge connector pads.

It is also recommended that the user connect the signal wires to the input terminals of the module only when the transmitter or signal generating device is powered down. The analog circuitry of the module does not have the same ground reference as the digital circuitry, consequently, since the analog signals are allowed to "float", the actual potential difference which exists between the module channels and the local earth ground will depend on the system layout configuration. See Section 7.3 for a simplified schematic of the module.

5.2 Wiring

The transmitter or signal generator should always be connected to the analog input module via shielded, twisted pair cable, such as Belden 8760. The shield serves to protect the current carrying wires from noise, while the twisting of the wires helps to insure that any noise which does penetrate to corrupt this signal influences both wires equally. In this way, the differential signal level between the two wires is maintained, and the signal will be preserved due to the common-mode voltage rejection designed into the module.

When wiring the RIM-121 channels to the analog signal source or transmitter, proper configuration will depend on the polarity and conventions followed by the manufacturer. The RIM-121 should be treated as any load which is part of the signal loop. Note, 2-wire and 4-wire transmitters will typically be wired with different polarities. For instance, Figure 5 is applicable in cases where the signal generating device provides power to the loop, as with 4-wire transmitters. A 2-wire transmitter, however, would be wired with the polarity opposite as shown, since it acts as a load to the external power supply driving the loop. See the manufacturer's wiring diagram for proper connections.

The following is a list of other recommended practices:

1. The shield must only be connected at one end—at the input module where a terminal is provided for the shield of each pair of signal carrying wires. At the other end (i.e. near the transmitter) the shield should be peeled back and insulated from any contact with the signal carrying wires. This practice of "singly grounding the shield" is especially applicable when a cable has been spliced or nicked; the user should exercise care to insure that the shield is insulated along its entire length, and that it never comes in contact with any other surface.

2. The unshielded portions of the wire run (such as at the transmitter and at the analog input module) should be kept as short as is practical.

3. Wires carrying analog signals should be routed as much as possible away from potential sources of noise such as motors, transformers, contactors, etc. Be especially suspicious of any AC devices. Analog signal wires must NEVER share the same conduit with AC wiring. On those occasions where you must pass close by to AC wiring, do so at right angles.

4. Transmitters should not share the same signal return wire. Furthermore, since all four minus terminals on the module share the same analog ground, all transmitters connected to the module must reference the same ground at the other end. Failure to observe this practice will result in ground loops which will destroy the integrity of the individual signals.

5. The 4-20 mA setting will have better noise immunity. When operating on a voltage range, the allowable length of the wire is limited by the capacitance build-up to a distance of approximately 50 feet. Allowable distance on the current setting is limited by the drive capability of the transmitter (typically 600-1000 ohms) and the total loop resistance.

6. Consult bibliography at the end of this instruction bulletin for extensive information regarding wiring considerations for analog signals.

5.3 Miscellaneous Considerations.

All four channels are updated by the module every 200 milliseconds. This rate is fixed at 50 msec. per channel. Furthermore, the autocalibration system will periodically "steal" a conversion cycle to insure that the span and zero are set correctly.

If faster update times than 200 msec. are desired, this suggests that wiring the same input signal to all 4 channels will result in that signal being read every 50 msec., provided the signal source can drive all 4 channels.

When using the analog input module with the Model 500 or 700, it is mandatory that four registers be assigned to each slot in which an analog module is installed. When used with the Model 300, it is possible to assign less than that number if some channels will remain unused; in these cases, input signals should be wired to channels 1 through 4 in descending order, or they will not be accessible.

Due to the nature of the CMOS multiplexing circuitry, non-zero values may appear across the plus and minus terminals when operating on a voltage range, even with no wires connected to them. This is an inherent characteristic of the high input impedance exhibited by solid state multiplexers, and is a normal condition which the user should be aware of.

DIP switch setting for the range should not be altered while the module is under power. These settings are read by the module only during its power-up sequence.

Module "minus" inputs are not individually isolated. Connecting analog input signals with different ground references from each other to the same module could result in erroneous readings.

Analog values are inherently temperature sensitive; the specified accuracy of 0.5% of full scale range over 0-60°C range improves to 0.1% at room temperature. High resolution without improved accuracy is meaningless to the point of being misleading.

6.0 TROUBLESHOOTING

†6.1 Diagnostic Light

The RUN LED indicates the on board microprocessor is functioning properly. Section 3.5.2 lists some situations in which the RUN LED may be ON, but the analog signals are not being properly converted. Hence, while an illuminated light does not always indicate proper operation, one can assume that a light which fails to come on indicates a definite problem.

Failures experienced by the analog input module are classified as fatal or non-fatal. Fatal errors are indicated by the RUN light remaining OFF. Recovery (when possible) can only be accomplished by cycling power to the rack in which the module is located. In the case of a non-fatal error, the RUN light will illuminate but the processor (or drop) may refuse to go into RUN. Simple toggling of the processor keyswitch to HALT and back to RUN may be sufficient to clear the error. Distinctions between fatal and non-fatal errors are handled in this

†Minor Rev. 5/84

fashion because under certain "cold start" conditions, module circuitry may require a brief warm-up period. Such a condition is not a true module error, but rather a physical circuitry limitation which clears itself after a brief period of time. In these cases, toggling the processor keyswitch is sufficient to allow the system to recover.

If the light fails to come on at all, the module is not receiving DC power; check to see that the rack is connected to a properly sized SY/MAX power supply which is itself producing power. If the RUN light flashes briefly upon the application of power, this indicates that the module has failed to complete its power-up sequence of checks and is annunciating a fatal error. Once again, this does not necessarily indicate a defective analog input module. The DC power being provided may be inadequate to sustain operation. This will also occur if ther is no processor or remote interface module located in the same rack, since the module's microprocessor can sense that there is no device present with which to communicate.

When confronted with an analog input module whose RUN light refuses to illuminate, the user would therefore do well to try the module in a configuration in which these possibilities can be ruled out. See Section 3.5.1 for examples of simple trial layouts. If the module is proven to be defective, register status bits will identify the reason.

†6.2 Using Programming Equipment

Assuming the RUN light is ON, the user should now check the controlling processor to verify that communication has been established. This is best done by using the CRT in the MONITOR mode to examine the storage registers which the user believes to be reading the analog input channels. Status bits 25 through 32 of the respective registers reveal a wealth of information. Section 4.1.1 contains a table of the status bits describing conditions associated with the analog input module; failure of *any* of the listed codes to appear most likely indicates a rack slot addressing problem. See Instruction Bulletin 30598-165-02 or 30598-167-01.

The codes of Section 4.1.1 may be interpreted as follows:

A. Normal Operation—All *digital* circuitry is functioning reliably. The application of a signal within the intended operating range should cause changes in the assigned storage register to reflect the changing input. If this does not occur, suspect either the signal generating device or the analog circuit portion of the analog input module. Note that it is possible for the multiplexer or the analog to digital converter chip to malfunction and still give the indication of normal operation with RUN LED illumination.

B. EPROM Failure — The module is defective and must be replaced.

C. DC-DC Failure — The DC power being supplied to the digital circuitry of the module is insufficient for reliable operation. If the SY/MAX power supply powering the rack is functioning properly, the fault lies with the DC-to-DC converter in the analog input module. The module should be replaced.

D. Range Switch Settings Invalid—As part of the initialization sequence of the module, a check is performed on the DIP switch settings for the range selection (see section 3.3). Power down the rack, remove the module and recheck the switches for a valid combination.

E. No Card Acknowledged In Slot—The processor is not recognizing the presence of the module. Try reinserting the module to make sure that it is seated properly. Check rack slot addressing for proper allocation of registers and slots.

F. Slot Not Addressed — The system is not properly configured.

6.3 Erratic Operation

If the user remains uncertain as to which element in the system may be causing a problem, suggest trying the hardware configuration of one of the examples of Section 3.5.1. By virtue of their simplicity, numerous factors are eliminated to help narrow down the source of the problem.

7.0 THEORY OF OPERATION

7.1 Block Diagram

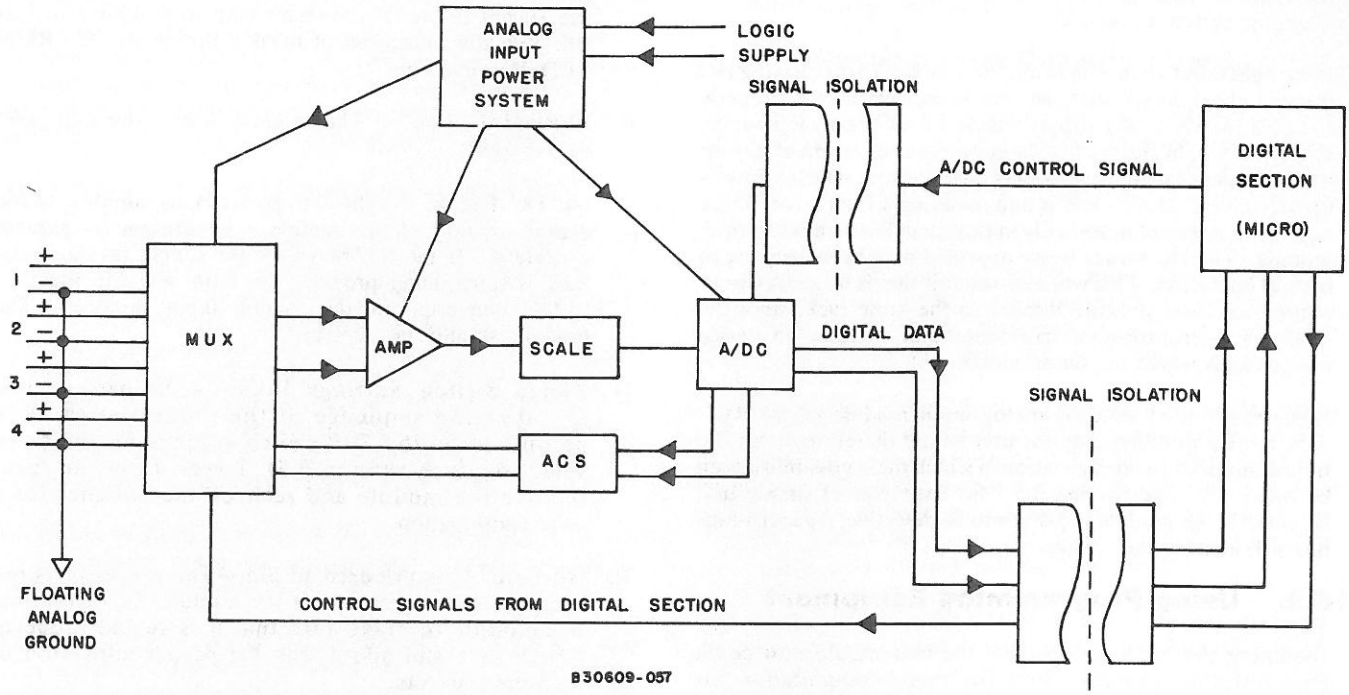

Figure 6

7.2 Detailed Description

This section describes the subsystems shown in Section 7.1.

The analog input module has its own DC/DC power supply, converting the 5 VDC from the SY/MAX power supply connected to the rack to the ±15 VDC level required by the analog circuitry. This conditioned ±15 VDC is used to furnish a regulated reference of 5 VDC and 10 VDC required by the other analog subsystems.

The module employs an eight-channel, single-ended CMOS multiplexer (Harris Type 508B) to switch in turn each of the four channels providing the input signals to the analog to digital converter (four channels are used to read the input signals, while the remaining channels are used by the auto calibration system in selecting 5 VDC and 10 VDC voltage references).

After the multiplexer has selected the input channel, the analog signal is then scaled to a proportional level which the analog to digital converter is able to interpret.

The card employs the Analog Devices Type 7550 BD CMOS quad-slope integrating analog to digital converter (A/DC). The quad-slope integrating technique is especially suitable for use in the industrial environment due to its superior noise immunity. It also provides both auto-zeroing and low sensitivity to component error, variations in the supply, and temperature changes. The 13-bit resolution of the A/DC combines with these factors to ensure the accuracy and reliability of the 11-bits (1 part in 2000) seen by the user. Without additional calibrating techniques, the zero drift and gain temperature coefficients are less than 1 ppm per °C maximum.

The analog circuitry of the module is designed to float at the potential of the analog input common. Power isolation is accomplished by an Analog Devices AD949 DC-to-DC converter. Signal isolation is accomplished by means of HP optical couplers and Litronix opto-isolators.

The automatic calibration subsystem (ACS), under control of the module's own microprocessor, replaces the need for calibrated input signals in order to make adjustments to eliminate initial errors in system offset and gain. The ACS uses extra channels of the MUX network to apply DC voltage references to the A/DC. These signals are used as a base line so that when subsequent conversions are performed on field analog input signals, the conversion circuitry uses this offset and gain information to correct the digital value. This ACS cycle takes place initially at power-up and at random intervals thereafter. The reliability of the ACS is a function of the following points:

1. Most of the initial error and temperature drift in the system resides in the amplifier and scaler portions of the circuit (as opposed to the MUX or the A/DC).

2. The ratiometric A/DC used has low drift over the temperature range, is monotonic, and has more resolution (13 bits) then what is seen by the user.

3. The DC voltage reference has good initial accuracy and low drift.

The operation of the module is governed by the Intel 8031 microprocessor, performing such tasks as power-up and operating diagnostics checks, as well as the auto-calibration and the timing associated with the entire conversion process. The Intel 8255A PPI chip is used to govern bus traffic.

7.3 Simplified Schematic (Input Circuitry)

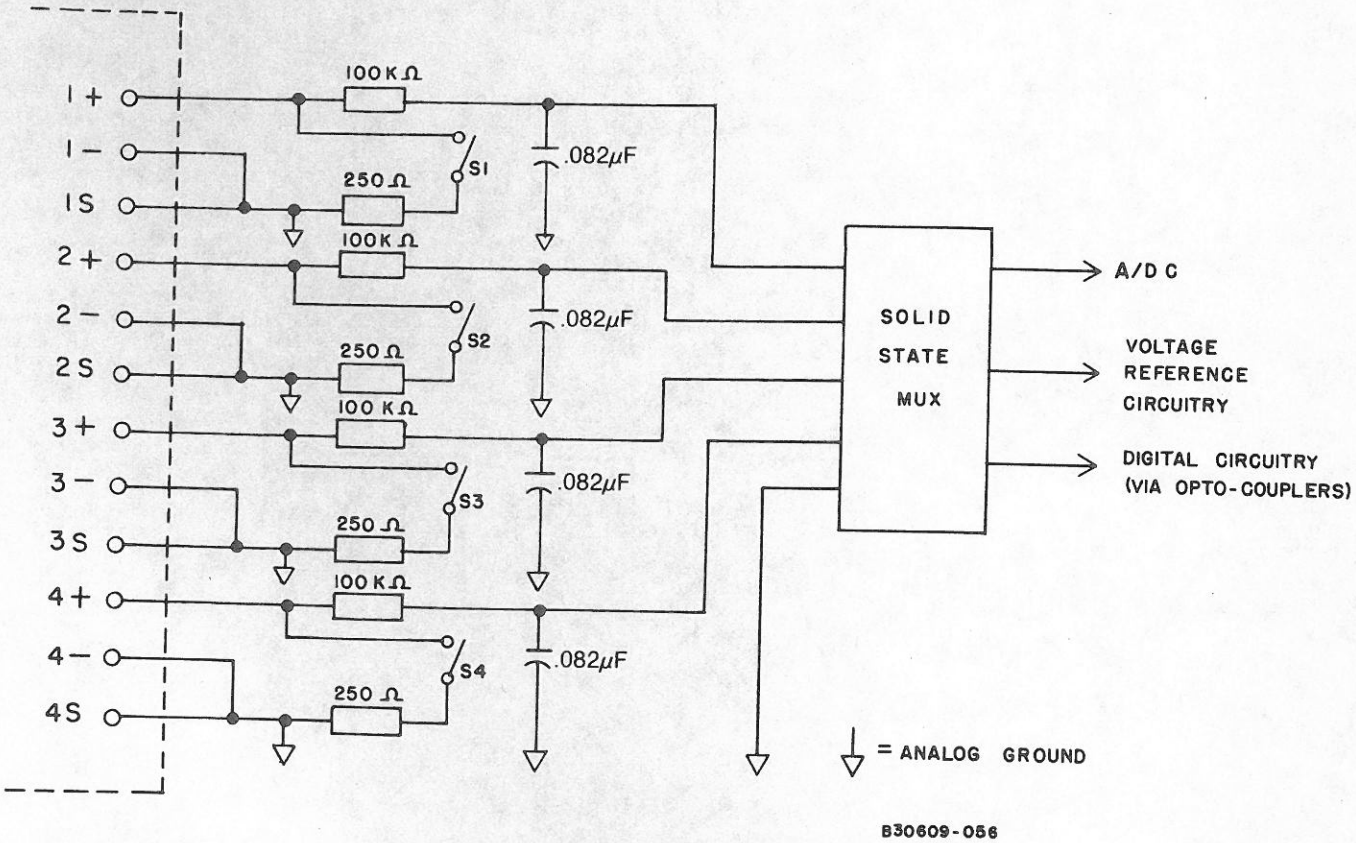

BIBLIOGRAPHY

IEEE Std 518-1977, Guide for the Installation of Electrical Equipment to Minimize Electrical Noise Inputs to Controllers From External Sources.

IEEE Std 142-1982, Recommended Practice For Grounding of Industrial and Commerical Power Systems.

Ott, Henry W. - *Noise Reduction Techniques in Electronic Systems.* New York: Wiley - Interscience, 1976.

Instruction Bulletin

Subject: **SY/MAX®**
CLASS 8030 TYPE ROM-121 STANDARD ANALOG OUTPUT MODULE

DESCRIPTION:

The Class 8030 Type ROM-121.SY/MAX Standard Analog Output Module provides SY/MAX Family Programmable Controllers and Process Control Modules with the ability to output standard electrical ranges for up to 4 high level analog output signals. This instruction bulletin describes the installation, programming, operation, and troubleshooting of the analog output module.

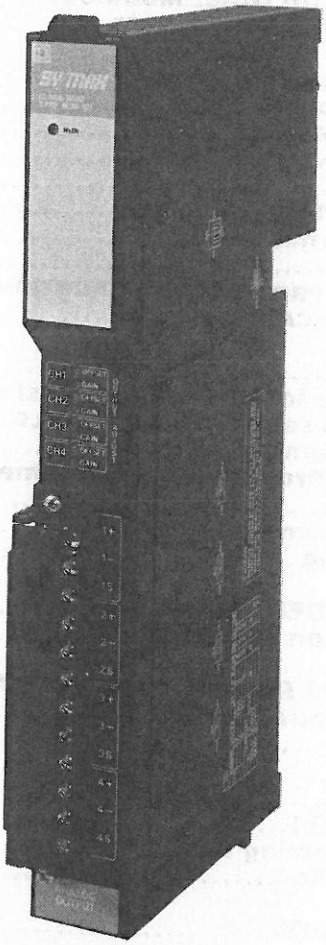

ATTENTION

This device contains static sensitive I.C.'s and is subject to damage by electrostatic discharge. Do not handle device by gold edge contacts.

© Square D Company, 1984

TABLE OF CONTENTS

SECTION	TITLE	PAGE
1.0	DESCRIPTION OF CLASS 8030, TYPE ROM-121 MODULE	5
1.1	Introduction	5
1.1.1	GENERAL DESCRIPTION	5
1.1.2	GENERAL OPERATION	5
1.2	Front of Module	5
1.3	Side of Module	5
2.0	SPECIFICATIONS	6
2.1	Electrical Specifications	6
2.2	Physical Specifications	6
2.3	Environmental Specifications	6
2.4	Compatibility With Racks	6
2.5	Compatibility With Other Modules	6
2.6	Compatibility With Processors	6
3.0	INSTALLATION	7
3.1	Physical Inspection	7
3.1.1	NEW MODULE	7
3.1.2	REPLACING A MODULE	7
3.2	Keying	7
3.3	DIP Switch Setting	7
3.4	Field Wiring Terminations	7
3.5	Start-Up	8
3.5.1	NECESSARY PROCESSOR INSTRUCTIONS	8
3.5.2	NORMAL INDICATING LIGHTS	8
4.0	PROGRAMMING	9
4.1	Register Usage for System Addressing	9
4.1.1	STATUS AND ERROR REGISTER TABLE	9
4.2	Types of Programming Equipment	9
4.3	Connection of Programming Equipment	9
4.4	Program Steps	9
4.5	Example Programs	9
4.6	Program Editing	9
5.0	APPLICATION CONSIDERATIONS	10
5.1	Module Insertion and Removal	10
5.2	Wiring	10
5.3	Output Channel Response to CPU HALT	10
5.4	Control of Output Channel Signal	11
5.5	Miscellaneous	12
6.0	TROUBLESHOOTING	12
6.1	Diagnostic Light	12
6.2	Using Programming Equipment	12
6.3	Erratic Operation	12
7.0	THEORY OF OPERATION	13
7.1	Block Diagram	13
7.2	Detailed Description	13
7.3	Simplified Schematic	14
APPENDIX A - Calibration of Output Channels		15
BIBLIOGRAPHY		15

†The products and services described in this manual are useful in a wide variety of different applications. Therefore, the user and others responsible for applying the products and services described herein are responsible for determing their acceptability for each application. While efforts have been made to provide accurate information within this manual, the Square D Company assumes no responsibility for the accuracy, completeness, sufficiency or usefulness of the information contained herein.

Under no circumstances will the Square D Company or any of its subsidiaries be responsible or liable for any damages or losses, including indirect or consequential damages or losses, arising out of either the use of any information contained within this manual or the use of any products or services referenced herein.

No patent liability is assumed by the Square D Company with respect to the use of any of the information, products, circuits, programming or services referenced herein.

The information contained within this manual is subject to change without notice.

†Added 9/85

1.0 DESCRIPTION OF SY/MAX FAMILY STANDARD ANALOG OUTPUT MODULE

1.1 Introduction

1.1.1 GENERAL DESCRIPTION

The Class 8030 Type ROM-121 Standard Analog Output Module provides the capability of generating 4 channels of analog output signals (4-20mA, 1-5VDC, 0-10VDC or ± 10VDC) for controlling adjustable frequency drives, positioning valves, dampers, etc. The module is compatible with any SY/MAX Family Processor which possesses register I/O addressing capability, or with the SY/MAX Family Process Control Module. The module may be inserted into any slot of a register rack (except slot 1) or the register slot of a digital rack. Each module utilizes 4 registers in the system (1 register per channel) in which the analog current or voltage being output is stored as a value ranging from 0 to 9999. Simple programming techniques allow these storage register values to be scaled from engineering values prior to outputting, provided the processor being used has math capability. The module requires no external power supply to operate (drawing its power from the SY/MAX Family Power Supply connected to the rack) and requires no additional external components. Span and zero are adjustable while the module is operating, and must be initially calibrated for the selected range using a voltmeter. The outputs are short circuit protected, and the modules conform to industry standard ISA-S50.1. Upon HALTing of the associated processor, the output channels may be configured to either HOLD their last value or to RESET to the minimum value for the selected range, selectable by the user on the basis of the safest shutdown mode. A removable terminal strip facilitates quick replacement with no rewiring necessary.

1.1.2 GENERAL OPERATION

The Class 8030 Type ROM-121 module performs its tasks utilizing several subsystems. The digital to analog converter (D/AC) performs the actual conversion of the storage register value, and this signal is sent to the individual sample and hold circuitry of the respective output channels. The on-board microprocessor then performs the proper channel selection. Each channel references individual span and zero settings. The module also contains a DC-to-DC converter, along with signal and power isolation circuitry. For a block diagram of the operation, see Section 7.1.

1.2 Front of Module

The front of the module shows a RUN LED, SPAN and ZERO (or GAIN and OFFSET) adjustments for the 4 output channels, and a terminal strip.

The terminal strip contains 4 groups of 3 terminals; each group corresponds to 1 output signal or channel. One terminal exists for the positive wire to the output device, one terminal for the negative, and the third terminal for the shield wire. For field wiring considerations, see Section 3.4.

The SPAN and ZERO (or GAIN and OFFSET) adjustment potentiometers are used to calibrate the range of the individual channels. See Appendix A for proper calibration procedures.

The RUN LED indicates the on-board microprocessor is functioning properly.

1.3 Side of Module

Accessible by removing the two side cover plates are 8 DIP switches which allow the user to select the desired range setting and the HOLD or RESET option for the output channels in the event of the controlling processor going into HALT. See Section 3.3 for proper settings.

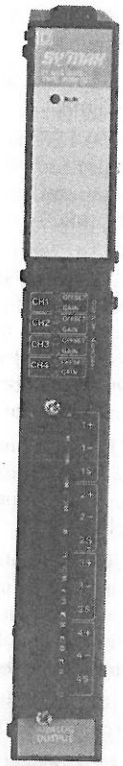

Figure 1

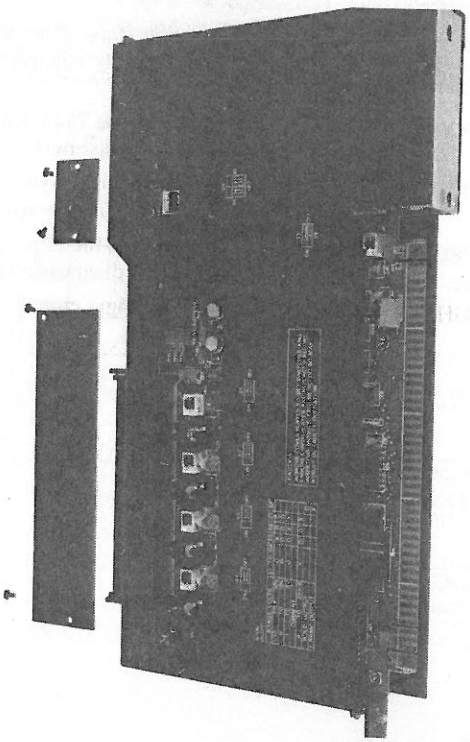

Figure 2

2.0 SPECIFICATIONS

2.1 Electrical Specifications

OUTPUTS PER MODULE:	4 (selected range will apply to all 4 channels).
RANGES:	1-5VDC, 0-10VDC, ± 10VDC, 4-20mA
ACCURACY:	± 0.15% at 25°C, ± 0.5% (of full scale) over 0-60°C temperature range. Span and zero require initial user calibration.
RESOLUTION:	11-bit, or 1 part in 2047 (full scale range in the storage register of 0-9999). Negative storage register values will correspond to the minimum output of the selected range; values in excess of 9999 will be represented as the maximum output for the selected range.
CONVERSION RATE:	Output channel reflects register value within 10 msec. of module receiving updated information (40 msec. for all 4 channels).
ISOLATION:	200V channel to ground (or analog output circuitry to digital logic circuitry) continuously applied, 1500V transient isolation. No analog channel-to-channel isolation.
DRIVE CAPABILITY:	10mA (voltage settings), 600 ohms (current setting).
USER OUTPUT OPTIONS UPON CPU HALT:	HOLD (maintain the last value received while in RUN) or RESET (go to the minimum output for the selected range within 40 msec. of CPU HALT).
SHORT CIRCUIT PROTECTION:	Yes.
POWER REQUIREMENT:	1500mA current draw from SY/MAX Family Power Supply connected to the rack.
D/A CONVERTER:	Analog Devices Type 7543 (CMOS 12-bit serial-in D/A converter).
MULTIPLEXER:	National Semiconductor Type LF398H, individual channel sample-and-hold.
MICROPROCESSOR:	Intel 8031 (controls the D/A converter, logic timing, and diagnostics).
RUN LIGHT:	Indicates digital logic circuitry is functioning properly.

2.2 Physical Specifications

WEIGHT:	2.8 lbs. (approx.), 1.3 kg.
DIMENSIONS (WxHxD):	1.5 x 12.8 x 6.6 (in) 3.8 x 32.5 x 16.8 (cm)

2.3 Environmental Specifications

AMBIENT TEMPERATURE:	0-60°C (operational)
STORAGE TEMPERATURE:	−40 to +100°C
HUMIDITY RATING:	5-95%, relative humidity (non-condensing)

2.4 Compatibility with Racks

RRK-100, RRK-200 (except the first slot)
HRK-100, HRK-200 (register slot only)
CRK-210, CRK-300 (register slot only)
DRK-210, DRK-300 (register slot only)
GRK-110, GRK-210 (register slot only)

2.5 Compatibility with Other Modules

Class 8040 Type PCM-110 (Process Control Module)

2.6 Compatibility with Processors

The following Class 8020 Type SCP programmable controllers:
311 and 312 (series E and later)
323 and 344 (series C and later)
313, 321, 322, 332, 333 (series D and later)
All Model 500 Programmable Controllers
†All Model 700 Programmable Controllers (ROM-121 must be series C or later.)

3.0 INSTALLATION

3.1 Physical Inspection

3.1.1 NEW MODULE

As packaged, the module requires no additional components to function. Individual channels do require calibration of SPAN and ZERO (or GAIN and OFFSET) settings. Refer to Appendix A for the proper procedure for the selected range. Before installing the module, the user should complete the following compatibility checks:

The proper range for the application is available (Section 2.1).

The proper range is selected (Section 3.3).

The desired CPU HALT output channel mode is selected (Section 3.3).

The processor is compatible (Section 2.6)

The rack and the necessary slot is available (Section 2.4).

The SY/MAX Family Power Supply is adequately sized (Instruction Bulletin 30598-156-02 or later).

The rack is not keyed to prevent module insertion (Section 3.2).

Field wiring terminations are understood (Sections 3.4 and 5.2).

The required programming, especially system addressing, is understood (Section 3.5.1, Section 4, Instruction Bulletin 30598-165-02 or later, or 30598-167-01 or later).

The module is installed by aligning the edge connector with the slots provided in the rack, and inserting the card so that it snaps into place. The module should then be secured to the rack with the captive fastening screw on the bottom.

CAUTION: The module should not be inserted or removed while the rack is powered up, or while wires are connected to an active output device. The user should insure that no signals are allowed to be transmitted to the output device until the operation of the module is understood. See Section 3.5.1 for general start-up procedures and Section 5.1 for application considerations regarding module insertion.

3.1.2 REPLACING A MODULE

A module may be quickly and easily replaced with another module. There is no need to rewire the analog output points as the terminal strip may be removed by simply loosening the screws which secure the strip. The user must be certain that the DIP switches are properly coded for the desired range and CPU HALT output channel setting. No software reprogramming is necessary. See Section 5.1 for application considerations regarding module insertion and removal.

3.2 Keying

A particular slot on the rack assembly may be keyed to accept only the ROM-121 module. A keying pin kit, Class 8030 Type CBP-104, may be used to insert the keying pin between pins 90 and 92 of the appropriate slot, as described in the register rack Instruction Bulletin 30598-265. The same procedure also applies to the register slot of any digital rack.

3.3 DIP Switch Settings

Removing the two cover plates on the side of the module allows user access to six DIP switches for selecting the desired current or voltage range. There is also an exposed pair of DIP switches near the top of the edge connector in the rear of the module; one of the switches (S7) is used for range selection, the other switch (S8) is used for governing output channel response to a CPU HALT (HOLD or RESET). Both the selected range and the output channel response will be common to all four channels. These settings should never be changed while the module is powered up. See Figure 3 for the appropriate settings; note especially the labeling and orientation of the switches. See Section 5.3 for further discussion on the selection of the output channel HOLD or RESET response options.

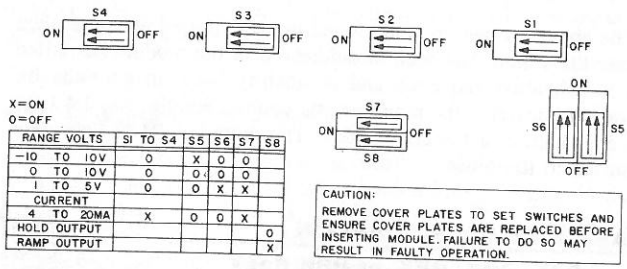

RANGE VOLTS	S1 TO S4	S5	S6	S7	S8
-10 TO 10V	O	X	O	O	
O TO 10V	O	O	O	O	
1 TO 5V	O	O	X	X	
CURRENT					
4 TO 20MA	X	O	O	X	
HOLD OUTPUT					O
RAMP OUTPUT					X

Figure 3

3.4 Field Wiring Terminations

Each analog output signal is wired to a group of three front terminals. The plus and minus terminals for the respective channels indicate the polarity of the analog output signal. Each output channel should be wired as a signal source, with the capability of driving into a 600 ohm load on the 4-20mA range setting or 1mA on a voltage setting. The "S" terminal is provided for the shield wire of each analog output. It is recommended that the wiring used be shielded twisted pair (Belden 8760 or 8761 or equivalent) with the shield being connected at the analog output module only. The user should note that all four minus terminals share a common analog ground internally. See Section 5.2 for a discussion of wiring considerations.

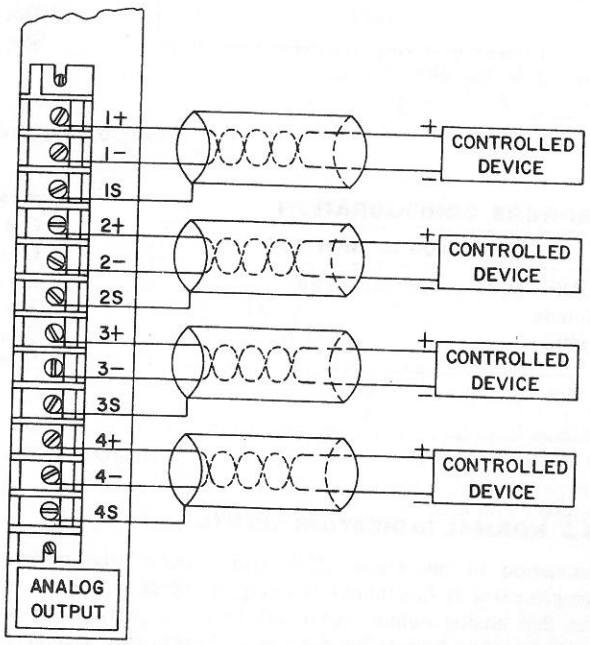

Figure 4

3.5 Start-Up

3.5.1 NECESSARY PROCESSOR INSTRUCTIONS

After observing the conditions outlined in Section 3.1.1, with rack power off, and with no output signal wires connected to the terminals of the module, the module may now be inserted in the appropriate slot. If the systems addressing has been correctly assigned to recognize the module in that particular slot and if the analog output module's microprocessor is functioning properly, upon power-up bits 25 to 32 of the register status field for the assigned registers will reflect the following code:

10000010

(Bit 32) (Bit 25)

If the above bit pattern is not found in the expected registers, then either the system has been misaddressed or the module has failed its initialization sequence and is sending back an alternate bit pattern to describe the nature of the failure. See Section 4.1.1 for an explanation of the error codes. The module's RUN light may also fail to illuminate.

The user should insure that each channel of the module is properly calibrated. Calibration should also occur any time the range of the module is altered, if the module is moved to a different rack, or if the rack power supply is changed. We recommend performing the calibration procedure (outlined in Appendix A) with the module at operating temperature.

Should the user wish to be more systematic about checking out the operation of these modules, the following test configurations and systems addressing assignments may be used. These are only intended as examples of possible configurations which may be used for familiarization purposes; final actual system layout is dependent upon the user's proper understanding of the system definition or rack addressing formats as outlined in Instruction Bulletin 30598-165-02 or later or 30598-167-01 or later.

HARDWARE CONFIGURATION

CRK, DRK, GRK, or HRK Rack		
ROM-121	MODEL 300	Digital I/O Slots
Register slot	CPU slot	

SYSTEM ADDRESSING

CPU Slot 0
Channel 0
Drop Number 0
Slot Number 1 108
Slot Number 2 112

COMMENTS

This will assign analog output channels 1-4 to registers 109-112 in the processor.

Example 1 — Model 300 in a Digital I/O Rack With Register Slot

HARDWARE CONFIGURATION

RRK-100 or RRK-200			
MODEL 300	CRM-210	ROM-121	Empty Register slots
Slot 1	Slot 2	Slot 3	

SYSTEM ADDRESSING

CPU Slot 0
Channel 0
Drop Number 0
Slot Number 1 — —
†Slot Number 2 108
Slot Number 3 112

COMMENTS

This will assign analog output channels 1-4 to registers 109-112 in the processor.

Example 2 — Model 300 in a Register Rack

HARDWARE CONFIGURATION

RRK-100 or RRK-200			
MODEL 500 (double width)		ROM-121	Empty Register slots
Slot 1	Slot 2	Slot 3	

SYSTEM ADDRESSING

CPU Slot 0
Channel 0
Drop Number 0
Slot Number 1 460
Slot Number 2 — —
Slot Number 3 464

COMMENTS

This will assign analog output channels 1-4 to registers 461-464 in the processor.

Example 3 — Model 500 in a Register Pack

3.5.2 NORMAL INDICATING LIGHTS

Illumination of the green RUN light indicates the on-board microprocessor is functioning properly, but does not necessarily mean that analog output signals are being properly converted. Should the user suspect improper module operation despite the green RUN light, suggest examination of bits 25-32 of the analog output channel registers. See Section 4.1.1 for possible error code conditions, and Section 6 for troubleshooting procedures.

† Minor Rev. 9/85

4.0 PROGRAMMING

4.1 Register Usage for System Addressing

Each analog output module will occupy four registers of the system. These four registers should be assigned to the slot in which the module is inserted, and will exist even if some of the channels remain unused.

4.1.1 STATUS AND ERROR REGISTER TABLE

This section describes possible codes which may be found in bits 25-32 of the status field of the assigned registers, generated by the analog output module's on-board microprocessor.

STATUS BITS

32	31	30	29	28	27	26	25	Description
1	0	0	0	0	0	1	0	Normal Operation
0	0	0	1	0	1	0	0	No card acknowledged in slot
0	1	1	0	1	0	0	1	Diagnostics in progress
0	1	0	1	0	0	0	0	EPROM failure
0	1	1	0	0	0	0	0	DC-DC converter failure
0	1	0	1	0	0	0	1	External RAM failure
0	0	0	0	0	0	0	0	Slot not addressed

See Section 6.2 for further explanation of these conditions.

4.2 Types of Programming Equipment

†Programming may be accomplished with any series of Class 8010 Type SPR-300.

The following listing summarizes the necessary series designation for other programming equipment. All are Class 8010.

Type SPR-200	Series H or later (Rev. 1.4)
Type SPR-201	Series D or later (Rev. 1.4)
Type SPR-210	Series H or later (Rev. 1.4)
Type SPR-211	Series D or later (Rev. 1.4)
Type SPR-250	All series
Type SPR-251	All series
Type SPR-260	All series
Type SPR-261	All series

4.3 Connection of Programming Equipment

Proper programming equipment is to be connected to the processor which controls the slot to which the analog output module is inserted. The module cannot be interrogated separately.

4.4 Program Steps

The values stored in the analog output registers may be utilized as would any storage register value, i.e. in IFs, LETs, COMMs statements, etc. Valid data as contained in the storage registers will range from 0 through 9999, with resolution of 1 part in 2047. Thus, the value stored in the register reflects to two decimal places the percentage of the selected range signal being output. The value 0 will correspond to the minimum output value, while 9999 will generate the maximum output value.

4.5 Example Programs

In many cases, the user will wish to enter a desired output current or voltage value; this must then be converted into a register value which the analog output module can interpret. The table below indicates the resolution provided with the respective signal ranges, and demonstrates mathematically how the actual current or voltage values may be scaled to properly represent output register values.

For the following examples, assume register 109 controls the analog output channel, and register 100 contains the actual voltage or current which the user desires to output. These are intended strictly as examples of conversions which the user may wish to make before outputting a value which the analog module is able to interpret. The user must have a fundamental understanding that storing or writing 0 in the register which controls the analog output channel will generate the minimum signal, 9999 will generate the maximum signal, and values in between will cause the signal to vary linearly throughout the range.

Range	Value to be Converted	Program Rung	Resolution Provided by Analog Output Module
4-20mA	Register 100 contains microamps	LET S109 = S100 ÷ 8x5 − 2500	7.81 microamps per bit
1-5VDC	Register 100 contains millivolts	LET S109 = S100 ÷ 2x5 − 2500	1.95 millivolts per bit
0-10VDC	Register 100 contains millivolts	LET S109 = S100	4.88 millivolts per bit
± 10VDC	Register 100 contains millivolts	LET S109 = S100 ÷ 2 + 5000	9.77 millivolts per bit

As an example, suppose the user wished to generate a 12 milliamp signal to an output device. Assuming the system has been properly configured, that channel one of the analog output module corresponds to register 109, and that the example program rung exists in the processor, entering a value of 12000 into register 100 will result in register 109 containing a value of 5000. This value, being midway between the available register range of 0-9999, corresponds to an output current of 12 milliamps, also in the middle of the desired output range. Similarly, if a value of 8 milliamps is desired to be output, entering the value 8000 into register 100 will result in a value of 2500 in register 109, generating an output signal of 8 milliamps. The user must become familiar with the full scale output signal being represented as 0-9999, reflecting to 2 decimal places the percentage of the selected signal range which is being output.

4.6 Program Editing

Ladder rung statements containing analog output registers may be edited as would any statement containing other storage registers.

† Minor Rev. 9/85

5.0 APPLICATION CONSIDERATIONS

5.1 Module Insertion and Removal

As noted in Section 3.5.1, the rack MUST be powered down prior to module insertion. Insertion or removal of a module while the rack is under power will induce a bus error, causing the processor which is addressing the card to go into HALT, with the indication of an I/O error. If such an error is incurred, the user should first place the processor keyswitch in HALT, and cycle power on the processor. The processor keyswitch should then be turned back to RUN. If the I/O error persists, return the processor keyswitch to HALT, remove power from the rack, and attempt to reseat the module. Similarly, when swapping modules, power MUST be removed from the rack to avoid generating a bus error. We also recommend that the user connect the output signal wires from the device being controlled to the terminals of the analog output module only when the device and the analog module are without power. The user must insure that when these devices are brought on-line, the value in the register which controls the analog output channel is known, so that the device does not begin operation without the user's understanding. Furthermore, the analog output circuitry of the module does not have the same ground reference as the digital circuitry. The output signals are allowed to "float", and are therefore referenced to the device being controlled. See Section 7.3 for a simplified schematic of the module.

5.2 Wiring

The device to be controlled should always be connected to the analog output module via shielded, twisted-pair cable such as Belden 8760 or 8761. The shield serves to protect the signal-carrying wires from noise, while the twisting of the wires helps to insure that any noise which does penetrate to corrupt the signal influences both wires equally, maintaining the differential signal level.

When wiring the ROM-121 channels to the controlled device, the user should check with the device manufacturer for wiring and loading considerations. The ROM-121 should be wired as a source which is driving into the load represented by the controlled device. Channel source limitations of the analog output module are 1 milliamp when operated on a voltage range setting, or 600 ohms when operated on the current range setting.

The following is a list of other recommended practices:

1. The shield must only be connected at one end. We recommend connection at the output module, where a terminal is provided for the shield of each pair of signal-carrying wires. At the other end (i.e. near the controlled device), the shield should be peeled back and insulated from any contact with the signal-carrying wires. This practice of "singly grounding the shield" is especially applicable when a cable has been spliced or nicked; the user should exercise care to insure that the shield is insulated along its entire length, and that it never comes in contact with any other electrical surface.

   Referring to Section 7.3, the user will note that the shield terminal is connected internally to the analog ground of the module. It is left to the user's discretion to determine whether connecting the shield at this point will provide the best noise immunity.

2. The unshielded portions of the wire run (such as at the controlled device and at the analog output module) should be kept as short as practical.

3. Wires carrying analog signals should be routed as much as possible away from potential sources of noise such as motors, transformers, contactors, etc. Be especially suspicious of any AC devices. Analog signal wires should NEVER share the same conduit with AC wiring. On those occasions where you must pass close by to AC wiring, do so at right angles.

4. Multiple devices which are controlled by the same analog output module should not share the same signal return wire. Furthermore, since all 4 minus terminals on the module share the same analog ground (see simplified schematic, Section 7.3), all controlled devices connected to the same module must reference the same ground at the other end. Failure to observe this practice may result in ground loops which could destroy the integrity of the signals being output to each controlled device.

5. Since the analog ground is allowed to float, its actual potential with respect to true earth ground will depend on user layout. The user must be aware of this potentially significant difference between the module's analog ground (typically referenced to the controlled device) and digital ground.

6. The 4-20mA setting will have better noise immunity. When operating on a voltage range, the allowable length of the wire is limited by the capacitance build-up to a distance of approximately 50 feet. Allowable distance on the current setting is limited by the drive capability of the analog output module (600 ohms) and the total loop resistance.

7. Consult bibliography at the end of this instruction bulletin for extensive information regarding wiring considerations for analog signals.

5.3 Output Channel Response to CPU HALT

In the event of the controlling processor going into HALT, the user is able to select either of two options for the analog output channels. DIP switch 8 allows the user to select either the HOLD or the RESET option. See Section 3.3 for proper switch settings.

Selection of the RESET option will cause all of the analog output channels to output the minimum value of the selected range whenever the controlling processor goes to HALT. In addition, the storage registers which are assigned to those analog output channels will also be RESET to zero. If the controlling processor goes from DISABLE OUTPUTS to HALT, the output channel signal will remain at zero (see the DISABLE OUTPUTS explanation under Section 5.4), and the storage register value associated with the channel would also go to zero.

When the output channel HOLD option is selected, the output channel will remain at the last value generated by the user program at the time the controlling processor went into HALT. Thus, if the processor was previously in RUN, upon going to HALT, both the output channel and the storage register associated with that output channel would freeze. If the controlling processor was previously in DISABLE OUTPUTS and went into HALT, the storage register value would freeze at the last value generated by the user program; the actual output channel signal, however, would have been established when the processor was switched out of the RUN mode, since while in DISABLE OUTPUTS the storage register value does not control the actual output channel signal. See the DISABLE OUTPUTS discussion under Section 5.4.

5.4 Control of Output Channel Signal

In order to properly apply the analog output module, the user must be aware of the output channel operating conditions under various processor operating modes.

When the processor is in RUN, the output channel values will be under the control of the associated storage register. The update speed between the time the register value is changed to the time the output channel reflects that change is a function of processor scan time and system configuration, plus an approximate 10 milliseconds which the module itself requires to convert and output the new value. Consult the Programming and Installation Guide Instruction Bulletin, the Local and Remote Interface Instruction Bulletin, and the respective Processor Bulletin for system throughput considerations.

When the controlling processor is in HALT, the output channel and its associated register will be fixed in a user-defined known state, the exact value depending on whether the user selected the RESET or HOLD option.

When the controlling processor is in DISABLE OUTPUTS, the storage register values continue to change as the processor continues to execute the ladder program. The output channel values, however, WILL NOT REFLECT these changes, but will be based on the user selected RESET or HOLD option. In the case of the RESET option, this implies that the output channel signal will remain at its minimum value *regardless* of the storage register value; in the case of the HOLD option, the output channel signal will be frozen at the last value generated by the user program while in RUN, and again will be independent of the changing storage register value.

When used with a Model 300 Processor, the user will be unable to change the storage register values with the CRT or a loader/monitor while the processor is in HALT or DISABLE OUTPUTS. The processor will allow changes to the storage register values and the associated output channels only while in RUN.

When used with a Model 500 Processor, storage register values may be changed via the CRT or loader/monitor regardless of keyswitch position. The user should note, however, that the output channels will behave in accordance with the rules discussed earlier regarding processor keyswitch position.

CAUTION: When using the analog output module to control critical drive or process applications, the user must have a clear understanding of the output channel response to the various modes under which the processor may operate. Selection of the HOLD or RESET option is left to the user's discretion as to which is the safest mode in the event of a processor HALT. Should power to the rack in which the analog module is inserted be lost, the previous discussion does not apply as all affected output channels will no longer generate any signal. The following table applies in those instances when both the processor and analog output module lose power simultaneously, i.e. are both in the same rack. Consult the Local and Remote Interface Instruction Bulletin for drop failure mode operation when the analog output module is located in a remote rack.

TABLE A

TYPE	PROCESSOR KEYSWITCH POSITION WHEN POWER IS CYCLED	USER-SELECTED OUTPUT CHANNEL FAILURE MODE	REMARKS
300	RUN	RESET	Upon resumption of RUN status, assigned registers will maintain their last value, and the respective output channels will reflect these values.
300	RUN	HOLD	
500, 700	RUN	RESET	Upon resumption of RUN status, assigned output registers will be reset to 0 and the output channels will reflect the minimum signal for the selected range.
500, 700	RUN	HOLD	Upon resumption of RUN status, assigned output registers will be reset to 0, but output channels will reflect a 0 signal level rather than the minimum for the selected range. For example, on the current range setting, the output will be 0 mA, not 4 mA. An exception is the ± 10 VDC range, which will result in an output channel signal level of − 10 VDC.
300	HALT or DISABLE OUTPUTS	RESET	Assigned output registers will be reset to 0, but output channels will reflect a 0 signal level rather than the minimum for the selected range.
300	HALT or DISABLE OUTPUTS	HOLD	
500, 700	HALT or DISABLE OUTPUTS	RESET	
500, 700	HALT or DISABLE OUTPUTS	HOLD	

5.5 Miscellaneous Considerations

The update time between the reception of a storage register value and its reflection to the output channel signal is 10 milliseconds. With 4 registers per module, each channel will therefore require at least 40 milliseconds for updating. Actual throughput time may be longer than this, and is dependent upon processor scan time and system configuration. When fast update times are required, the user optimizes throughput speed by locating the output module in the same rack with the processor.

The user should assign four registers to the slot in which the analog output module is inserted regardless of whether or not the user will wire output devices to all four channels. The user should be aware that these channels are live even if their associated registers contain a value of zero. Depending on the selected range, a register value of zero MAY NOT correspond to a signal value of zero.

DIP switch settings for the range and output channel CPU HALT option should not be altered while the module is under power. These settings are read by the module only during its power-up sequence.

Module "minus" outputs are not individually isolated. Connecting output devices with different ground references from each other to the same module may result in erroneous readings. The 200 volts of isolation between the module's analog ground and digital ground does not provide channel-to-channel isolation.

Analog values exhibit a small temperature drift; the specified accuracy of 0.5% of full scale range over 0-60°C range improves to 0.15% at room temperature. The user should note that high bit resolution can easily be swamped by the accuracy constraints under which any analog module must operate. High resolution without improved accuracy will be meaningless to the point of being misleading.

6.0 TROUBLESHOOTING

6.1 Diagnostic Light

The RUN LED indicates the on-board microprocessor is functioning properly. The possibility exists that this light may be ON, but the analog signals are not being converted as expected by the user. Thus, while an illuminated light may not indicate proper operation, a light which fails to come on indicates a definite problem.

If the light fails to come on at all, the module is not receiving DC power; check to see that the rack is connected to a properly sized SY/MAX Power Supply which is itself producing power. If the RUN light flashes briefly upon the application of power, this indicates that the module has failed to complete its power-up sequence of checks. Once again, this does not necessarily indicate a defective analog output module. The DC power being provided may be inadequate to sustain operation, or the module may not be seated properly in the register slots.

When confronted with an analog output module whose RUN light refuses to illuminate, the user would therefore do well to try the module in a configuration in which these possibilities can be ruled out. See Section 3.5.1 for examples of simple trial layouts.

CAUTION: The analog output module must never be inserted or removed from the rack while under power. This principle must be observed when performing any troubleshooting.

6.2 Using Programming Equipment

Assuming the RUN light is ON, the user should now check the controlling processor to verify that communication has been established. This is best done by using the CRT in the MONITOR mode to examine the storage registers which the user believes to be controlling the analog output channels. Status bits 25-32 of the respective registers will contain one of several status codes which can be used to pinpoint the operation of the module. Section 4.1.1 contains a table of the status bits describing the conditions associated with the analog output module; failure of any of the listed codes to appear most likely indicates a rack slot addressing problem. See Instruction Bulletin 30598-165-02 or 30598-167-01.

The codes of Section 4.1.1 may be interpreted as follows:

NORMAL OPERATION — All digital circuitry is functioning reliably. Any changes to the storage register values controlling their assigned output channels should be reflected as changing output signals, provided the controlling processor is in RUN. If this is not occurring, suspect either the analog circuit portion of the analog output module or the device being controlled to be faulty. Suggest removing the controlled device from the analog output module and checking for proper signal conversion with either a voltage or current meter.

EPROM FAILURE — The module is defective and must be replaced.

DC-DC CONVERTER FAILURE — The DC power being supplied to the digital circuitry of the module is insufficient for reliable operation. If the SY/MAX Power Supply powering the rack is functioning properly, the fault lies with the DC-to-DC converter in the analog output module. The module should be replaced.

EXTERNAL RAM FAILURE — The module is defective and must be replaced.

NO CARD ACKNOWLEDGED IN SLOT — The processor is not recognizing the presence of the module. Try reinserting the module to make sure that it is properly seated. Check rack slot addressing for proper allocation of registers in slots. Be sure to remove power when reseating the module.

DIAGNOSTICS IN PROGRESS — The module has not completed its power up checks. Since these checks require less than one second, should this code appear for an extended period of time the module is defective and must be replaced.

SLOT NOT ADDRESSED — Check rack addressing or system definition register assignments.

6.3 Erratic Operation

The module is not able to recognize invalid range switch settings. Thus, if the user has selected a range other than what was expected, or is operating on some completely invalid combination of DIP switch settings, results will be erratic. The user must insure that these switches are properly set.

If the user remains uncertain as to which element in the system may be causing a problem, suggest trying the hardware configuration of one of the examples of Section 3.5.1. By virtue of its simplicity, numerous factors are eliminated to help narrow down the source of the problem.

7.0 THEORY OF OPERATION

7.1 Block Diagram

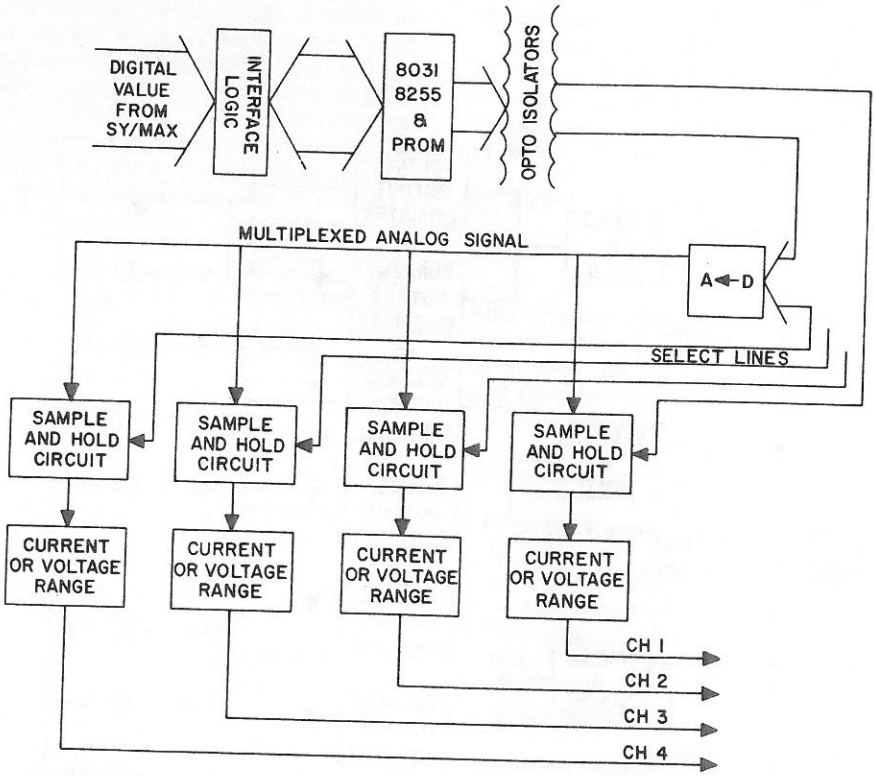

7.2 Detailed Description

This section describes the subsystems shown in Section 7.1.

The analog output module has its own DC/DC power supply, converting the 5 VDC from the SY/MAX power supply next to the rack to the ± 15 VDC level required by the analog circuitry. This regulated ± 15 VDC is used to source the output signal for each channel. Signal accuracy is maintained by the Analog Devices Type 584 Precision Voltage Reference.

The module employs the Analog Devices Type 7543 12-bit serial input digital-to-analog converter (D/AC). The signal being furnished by the D/AC is sent to the sample and hold circuitry for each respective output channel. The appropriate channel is then enabled by the logic circuitry, and this signal is converted either into a voltage or current output, depending on the mode selected. Operational amplifiers control output channel voltage ranges, while Darlington pair transistors are employed in the current range settings.

Output span and zero settings must be manually calibrated in order to establish parameters for the precision voltage reference. Calibration is required whenever the module is moved to a different rack, the power supply is changed, a new range is selected, or whenever the user suspects the accuracy has exceeded the specified tolerance of ± 0.5%.

The analog circuitry of the module is designed to float at the potential of the analog output ground, typically established by the connection configuration to the device being controlled. Power isolation on the module is accomplished by the Analog Devices AD 940 DC-to-DC converter. Digital to analog circuit isolation is accomplished via HP optocouplers.

The module operation and control is governed by the Intel 8031 microprocessor, while the Intel 8255A PPI chip is used to regulate bus traffic.

7.3 Simplified Schematic (Output Circuitry)

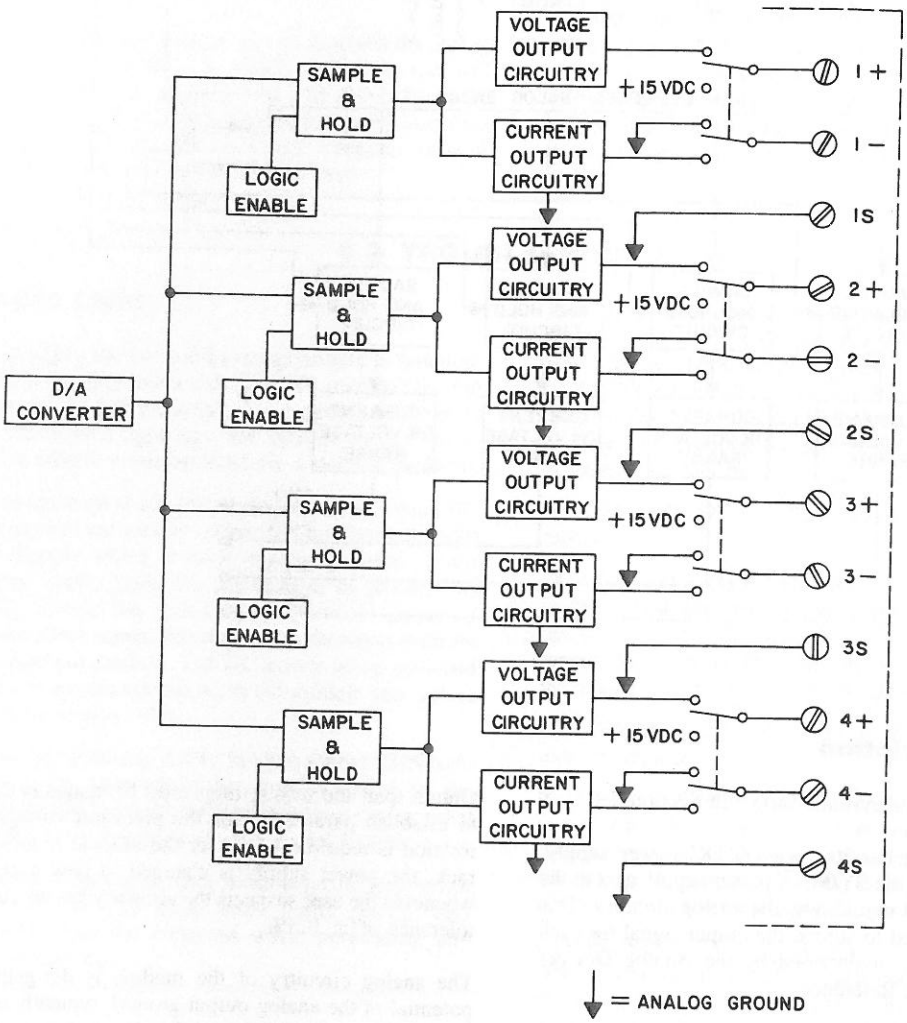

APPENDIX A
STANDARD ANALOG OUTPUT MODULE CALIBRATION

A newly-installed module requires user calibration before operation. Calibration should also be performed if the module is moved to another rack, the range is changed, the power supply is changed, or the user suspects module accuracy is falling outside of the ± 0.5% specification. Each channel requires individual calibration using the respective ZERO and SPAN (OFFSET and GAIN) potentiometers on the front face of the module. By establishing the endpoints, the module's reference and linearizing circuitry will maintain accuracy over the entire range. Greater reliability will be achieved if calibration is performed at operating temperatures.

In addition to a processor, rack, and power supply, the user will also require a programmer or loader/monitor, cable (preferably shielded, twisted-pair) and a voltmeter. An analog input module may be used in place of the voltmeter, but calibration parameters will not be as precise. If the module will be operated on the current range, a precision 100 ohm resistor will be needed if the voltmeter cannot be switched to current operation. The selected range will apply to all 4 channels, which must be individually calibrated. Refer to the appropriate range calibration procedure below. The processor must be in RUN. When performing the calibration, it may be necessary to repeat the procedure several times. If the user is unsuccessful in making progress, we suggest turning both potentiometers counterclockwise until the channel output ceases to change, then beginning the appropriate range calibration procedure again.

0 to 10VDC Range

1) Set range DIP switches.
2) Set output channel register to 9999. Adjust SPAN (GAIN) potentiometer until 9.999 volts is displayed.
3) Set output register to 0. Adjust ZERO (OFFSET) potentiometer until 0.000 volts is displayed.
4) Repeat steps 2 and 3 to achieve the desired precision.
5) Repeat this procedure for the other three channels.

−10 to 10VDC Range

1) Set range DIP switches.
2) Turn the SPAN and ZERO (GAIN and OFFSET) potentiometers counterclockwise until the channel output ceases to change.
3) Set output channel register to 9999. Adjust SPAN (GAIN) potentiometer until 9.999 volts is displayed. Call this voltage X.
4) Set output channel register to 0. Note displayed output, and call this voltage Y.
5) Calculate the desired minimum output Z thusly:

$$Z = Y - \frac{X + Y}{2}$$

6) Adjust ZERO (OFFSET) potentiometer until Z is displayed.
7) Set output channel register to 9999. Adjust SPAN (GAIN) potentiometer until 9.999 volts is displayed.
8) Adjust to desired precision either by repeating steps 3 through 7 or manually tweaking the potentiometers to achieve the desired precision.
9) Repeat the procedure for the other 3 channels.

EXAMPLE: $X = 9.999,\ Y = -9.676$

$$Z = -9.676 - \frac{9.999 - 9.676}{2} = -9.838$$

After adjusting the ZERO (OFFSET) potentiometer until output channel signal was −9.838 volts, the output channel register was set to 9999, and the SPAN (GAIN) potentiometer was adjusted until the output channel signal was 9.999 volts. Upon entering 0 into the output channel register, the signal was seen to be −9.988 volts. More precision could be achieved by alternately tweaking the potentiometers.

1 to 5VDC Range

1) Set range DIP switches.
2) Set output channel register to 9999. Adjust SPAN (GAIN) potentiometer until 4.999 volts is displayed.
3) Set output channel register to 0. Adjust ZERO (OFFSET) potentiometer until 1.000 volts is displayed.
4) Repeat steps 2 and 3 until desired precision is achieved.
5) Repeat the procedure for the other 3 channels.

4 to 20MA Range

1) Set range DIP switches.
2) For calibration with voltmeter, connect 100 ohm resistor across the channel "+" and "−" terminals.
3) Set output channel register to 9999. Adjust SPAN (GAIN) potentiometer until 1.999 volts is displayed.
4) Set output channel register to 0. Adjust ZERO (OFFSET) potentiometer until 0.400 volts is displayed.
5) Repeat steps 3 and 4 until desired precision is achieved.
6) Repeat the procedure for the other 3 channels.

Note: If an ammeter is used in place of a voltmeter, step 2 should be ignored, with outputs of 19.99 and 4.000 mA to be used for calibration with steps 3 and 4.

BIBLIOGRAPHY

IEEE Std 142-1982, Recommended Practice For Grounding of Industrial and Commercial Power Systems.

Ott, Henry W. - *Noise Reduction Techniques in Electronic Systems*. New York: Wiley - Interscience, 1976.

ISA Standard S50.1 (1975), Compatibility of Analog Signals for Electronic Industrial Process Instruments.

NEED HELP WITH A SY/MAX PROGRAMMABLE CONTROLLER PROBLEM? Class 8010, 8020, 8030, 8040

- Troubleshooting Help
- Repair Parts Shipment
- Field Service

During normal business hours, call your local Square D Field office or SY/MAX PC Stocking Distributor for assistance. For emergency service after hours, weekends, and on holidays, call the phone number listed below. Calling this number will put you in touch with a factory expert who can help with troubleshooting problems or make arrangements for Repair Parts Shipment and Field Service.

Before calling, be ready to provide complete production identification information including class and type number, series number, serial number (if any). When ordering repair parts or requesting field service assistance, be prepared to supply a purchase order number and other ordering information (such as shipping information, special airfreight routing, etc.).

CALL (414) 332-9960

Instruction Bulletin

Subject: **SY/MAX®**

CLASS 8030 TYPE HIM-101
8 FUNCTION 120VAC/DC INPUT MODULE

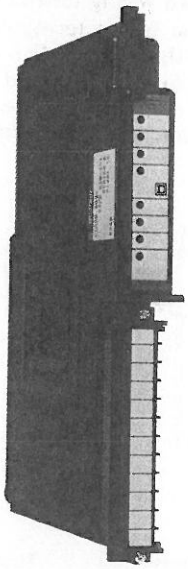

DESCRIPTION

The Type HIM-101 120VAC/DC Input Module contains eight optically isolated inputs which are capable of handling signals from such field input devices as limit switches, push buttons, and selector switches.

Each of the eight inputs has a red LED on the front of the module which illuminates when receiving an "ON" signal from the field input device (proper voltage applied to the wiring terminal). A marking area is provided next to each LED for input identification by the user.

SPECIFICATIONS

Inputs per Module	8
Type of Isolation	Optical
Isolation Rating	2500 V RMS
Voltage Operating Range	90-132 VAC (50/60 Hz) or VDC
Input Current Draw	7.0-11.0 mA
Must Turn On Voltage	90 V
Must Turn On Current	7 mA (at 90 V)
Must Turn Off Voltage	40 V
Must Turn Off Current	3.0 mA (at 40 V)
Input Impedance	12 K OHMS Resistive
Turn on Time	8 ms Nominal
Turn off Time	8 ms Nominal
Rated Current Draw on SY/MAX Power Supply	60 mA per module at 75% Duty Cycle 70 mA per module at 100% Duty Cycle
Ambient Temperature Rating	0-60°C
Humidity Rating	0-95% non-condensing
Weight (unpackaged)	1.2 lb./0.54 kg
Detachable Terminal Block	Class 8030 Type CBP-110
Ten Terminal Block Labels	Class 8030 Type CBP-109
Used with these Rack Assemblies	HRK-100, HRK-150†, HRK-200,
Compatible with Output Modules	COM-221, COM-251, COM-271, COM-281, DOM-221, DOM-225, DOM-251, GOM-221, HOM-221, HOM-251, HOM-271

TYPICAL WIRING

Field input devices are wired to the terminal block on the front of the input module. Figure 1 illustrates the typical wiring for the HIM-101 input module.

Wiring terminals 1 through 4 share a common "1A" terminal. Wiring terminals 5 through 8 share common terminal "2A". Likewise, for wiring terminals 9 through 16 and common terminals "3A" and "4A". The "B" terminals are not used on the input modules.

NOTE: Surge suppression is required only when an inductive load is in parallel with the programmable controller input.

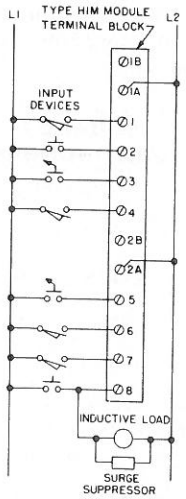

Figure 1 - Typical Wiring

© Square D Company, 1985

Supersedes 30598-185-01, 2/84
Printed in U.S.A.
AJR

SQUARE D

† Added August, 1986

A hinged plastic flap covers the wiring terminals on the front of the module. Labels are provided for both sides of the flap. See Figure 2. The label with eight marking areas is placed on the outside of the flap to identify I/O devices, wire numbers, etc. Two wiring terminal labels are included with the module. One is for terminals 1 through 8, the other for terminals 9 through 16. If the module is inserted in an ODD number slot, the terminal 1 through 8 label is placed on the inside of the flap. If the module is placed in an EVEN number slot, use the terminals 9 through 16 label. See Figure 3.

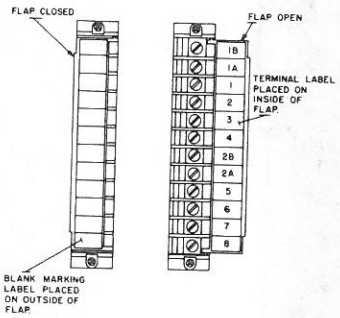

Figure 2
I/O Terminal Labels

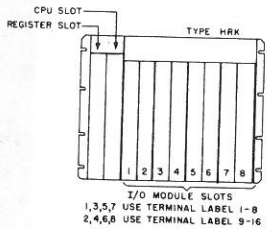

Figure 3
Terminal Label Placement

APPLICATION CONSIDERATIONS

- Each 4 inputs sharing a common "A" terminal are electrically isolated from the other inputs on the module.
- By removing the top and bottom retaining screws the terminal block may be removed from the module, allowing the module to be replaced without disturbing field wiring.
- In those applications where an inductive load such as a motor starter or solenoid is wired in parallel with a Type HIM-101 Input Module, a suppressor must be installed as indicated in Figure 1. A typical suppressor for 120 V AC operation consists of a 0.5 mfd, 400 volt capacitor with a 220 ohm resistor in series. Refer to Figure 4 for the recommended suppressor for the particular application.

TYPE	SQUARE D PART NUMBER	APPLICATION
Bathtub - Solder Terminals	26126-13502	General Purpose
Integrated RC Package - Solder Terminals	26136-13500	General Purpose
Channel Mounting Pressure Wire Connector	Class 9080 Type GT-6	Size 00-2 Starter (Square D Class 8536)
Channel Mounting Pressure Wire Connector	Class 9080 Type GU-6	Size 3-5 Starter (Square D Class 8536)

Figure 4 - Recommended Suppressor Chart

†• Note that an "appreciable glow" from the LED may be seen when high leakage currend, solid-state, input devices are used with a HIM-101, even though the input module is actually off. The must turn off voltages and currents are as listed in the specifications.

†• If the off state leakage current of the field input device connected to the Type HIM-101 Input Module is greater than 3 mA, consult the factory for recommended signal conditioning.

- When using the Type HIM-101 Input Module with DC voltage inputs, either polarity may be used, e.g. Terminals 1 (+) and Terminal 1A (–) or Terminal 1 (–) and Terminal 1A (+).
- Depending on the size and routing of wiring to the I/O terminals, it may be necessary to remove an adjacent terminal strip before removing an I/O module.

MODULE KEYING

Each socket on the I/O rack assembly may be keyed to accept only one type of I/O module. An optional keying pin kit, Class 8030 Type CBP-104, is available for this purpose. The correct position of the keying pin for the Type HIM-101 120 V AC/DC Input Module is between pins 14 and 16. See Figure 5. The keying pin is simply inserted manually into the slot in the rack connector using the keying pin insertion tool provided with the kit. See Figure 6.

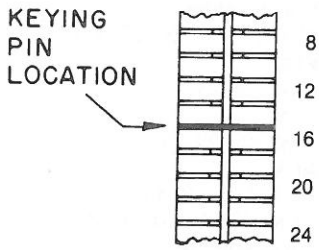

Figure 5
Keying Pin Location

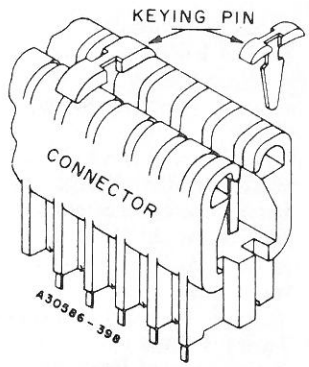

Figure 6
Keying Pin Insertion

CAUTION: When inserting or removing the keying pins, use care to avoid touching the contact fingers within the connector. Improper insertion/removal may damage the connector.

INSTALLATION INSTRUCTIONS

If it is desired to utilize the keying feature, insert the key mentioned above into the appropriate I/O rack slot. Insert the input module into the same slot (holding the module's pull tab in a horizontal position as the module is inserted) and tighten the captive screw. If desired, label the marking area on the front of the module to identify the field input device connected to that particular input. Lower the latching clamp to secure the top of the module.

† Added/Revised 5/85

†SIMPLIFIED SCHEMATIC OF MODULE

Figure 7 illustrates one of eight circuits within the module. The terminal marked "1A" is common to the first four inputs within the module.

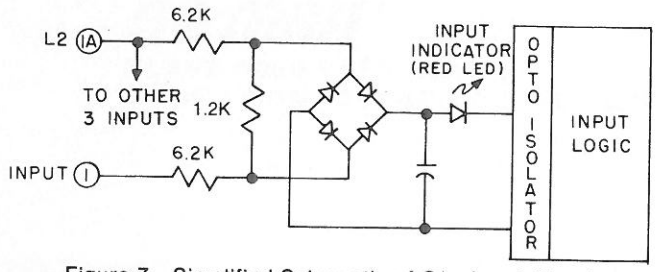

Figure 7 - Simplified Schematic of One Input Circuit

† Revised 5/85

Instruction Bulletin

Subject: **SY/MAX®**

CLASS 8030 TYPE HOM-221
8 FUNCTION 120VAC OUTPUT MODULE

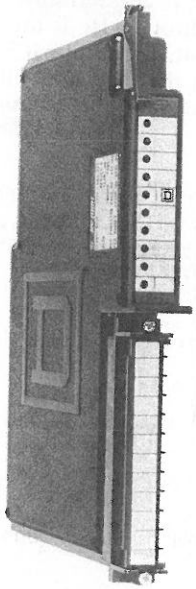

DESCRIPTION:

The Type HOM-221 120VAC Output Module contains eight optically isolated outputs, each of which is capable of driving loads such as motor starters, solenoids, or pilot lights.

There is a Red LED indicator on the front of the module for each output which illuminates when the processor issues a command to energize that output. Two neon lamps, one for each group of four outputs, on the front of the module will illuminate when a blown fuse is detected. A marking area is provided next to each LED for output identification by the user.

SPECIFICATIONS:

Outputs per Module	8
Type of Isolation	Optical
Isolation Rating	2500VRMS
Voltage Range	50-138V 50/60Hz
Maximum Current	2A/output (12A/module)
Minimum Load Current	*
Maximum On State Voltage Drop Across Output	2V at 2A Load
Maximum Off State Leakage Current	2mA at 138V 50/60 Hz
Maximum Surge Current	25A for 1 cycle (60 Hz) no more than 1 per second
Turn on Time	Less than .1 msec at 120V
Turn off Time	8.3 msec max. at 60 Hz, 10 msec max. at 50 Hz
Fuse	AGC-3, 3A, 250V
LED Operation	Red LED Illuminated when receiving "ON" signal from processor
Blown Fuse Neon Lamp	Neon Lamp Illuminated when a blown fuse is detected (one for each group of four outputs).
Rated Module Current Draw on SY/M Power Supply	225mA per module at 75% duty cycle 270mA per module at 100% duty cycle.
Ambient Temperature Rating	0-60°C
Humidity Rating	0-95% non-condensing
Weight (unpackaged)	1.8 lb./.806 kg.
† Used with these Rack Assemblies	HRK-100, HRK-150, HRK-200
Compatibility with Input Modules	HIM-101, CIM-101, DIM-101

* See Application Considerations

TYPICAL WIRING

Output devices are wired to the terminal block on the front of the module. Figure 1 illustrates the typical wiring for the Type HOM-221 output module.

Wiring terminals 1 through 4 share a common "1A" terminal. Wiring terminals 5 through 8 share common terminal "2A". Likewise, for wiring terminals 9 through 16 and common terminals "3A" and "4A." The "B" terminals are wired directly to L2 to provide the power required for the blown fuse indicators. See simplified schematic.

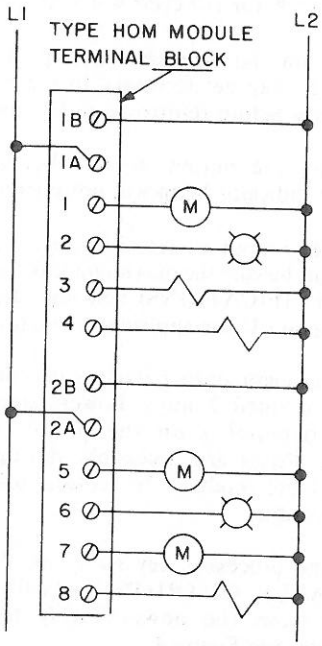

Figure 1—Typical Wiring

©Square D Company, 1984

A hinged plastic flap covers the wiring terminals on the front of the module. Labels are provided for both sides of the flap. See Figure 2. The label with eight marking areas is placed on the outside of the flap to identify I/O devices, wire numbers, etc. Two wiring terminal labels are included with the module. One is for terminals 1 through 8, the other for terminals 9 through 16. If the module is inserted in an ODD number slot, the terminal 1 through 8 label is placed on the inside of the flap. If the module is placed in an EVEN number slot, use the terminals 9 through 16 label. See Figure 3.

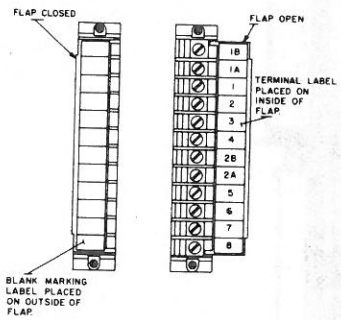

Figure 2
I/O Terminal Labels

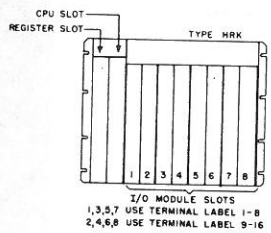

Figure 3
Terminal Label Placement

APPLICATION CONSIDERATIONS

- The Type HOM-221 Output Module has one common for each set of four outputs (2 commons per module).
- The maximum current rating of each output is 2 amps. Total module output current rating is 12 amps from 0 to 50°C and 10 amps from 50 to 60°C.
- The Type HOM-221 Output Module has internal transient noise suppression. It may be wired in series or parallel with hard contact switches to control an inductive load (such as a motor starter or a solenoid). *Do not* install additional noise suppression. Additional suppression may cause outputs to turn ON for 1/2 cycle when AC power is applied.
- Depending on the size and routing of wiring to the terminals, it may be necessary to remove an adjacent terminal strip before removing an I/O module.
- When using the output module below 90VAC, the blown fuse indicator lamp will not operate.
- Although the output module does not require a minimum load current, be sure the maximum leakage current (given in the SPECIFICATIONS) will not turn on the load. Contact Square D for application assistance.
- Each of the eight output circuits is individually fused. Each fuse is rated 3 amps. Lower rated fuses may be installed depending on the output devices being controlled. Fuses are accessible through openings in the side of the module. To replace fuses, use the following procedure:

  1) Turn the processor key switch to the "HALT" or "DISABLE OUTPUTS" position, or remove power from the power supply feeding the rack assembly. See Figure 4.
  2) Because voltages can be present at the terminal block on the module even when the module is unpowered, all power to the terminal block should also be removed to avoid accidental electric shock.
  3) Remove the output module from the rack assembly by loosening the module mounting screw and pulling the module from the rack assembly.
  4) Use a fuse puller or small blade screwdriver to pry up one end of the fuse, being careful not to damage the printed circuit board underneath. See Figure 5.
  5) Position the replacement fuse on the fuse clip and push into place with the screwdriver. Push on the metal, not the glass, portion of the fuse.
  6) Reinstall the output module in the rack assembly and tighten the mounting screw. Lock the Latching Clamp over the top of the module.
  7) Turn the processor keyswitch to "RUN" or reapply power to the power supply. Also reapply power to the module terminal block.

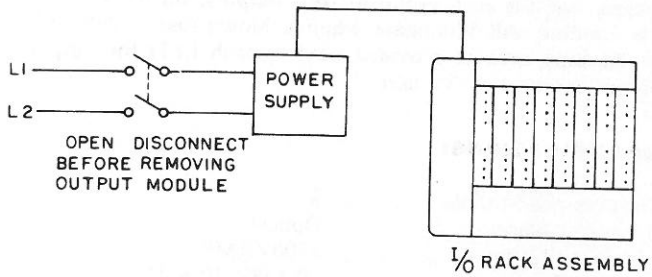

Figure 4 — Removing Power from the Power Supply

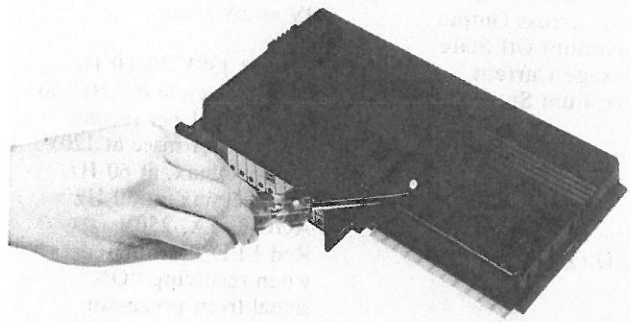

Figure 5 — Fuse Removal

MODULE KEYING

Each socket on the I/O rack assembly may be keyed to accept only one type of module. A keying pin kit, Class 8030 Type CBP-104, is available for this purpose. The correct position of the keying pin for the Type HOM-221 Output Module is between pins 20 and 22. See Figure 6. The keying pin is simply inserted manually into the appropriate slot in the rack connector using the keying pin insertion tool provided with the kit. See Figure 7.

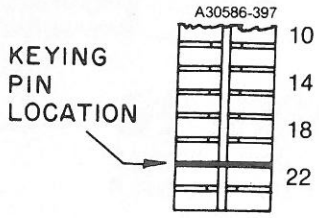

Figure 6
Keying Pin Location

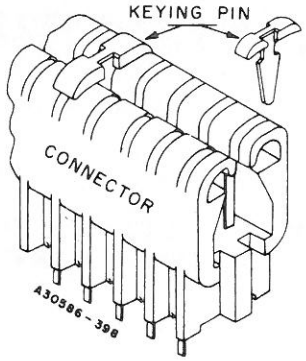

Figure 7
Keying Pin Insertion

CAUTION: When inserting or removing the keying pins, use care to avoid touching the contact fingers within the connector. Improper insertion/removal may damage the connector.

INSTALLATION INSTRUCTIONS

Insert the output module into the rack (holding the module's pull tab in a horizontal position as the module is inserted) and tighten the captive screw at the bottom of the module. Lower the latching clamp to secure the top of the module.

SIMPLIFIED SCHEMATIC

Figure 8 illustrates one of the eight circuits with the Type HOM-221 Output Module. The terminal marked 1A is common to output terminals 1 through 4.

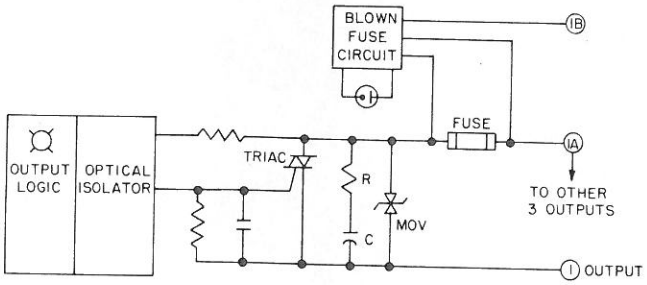

Figure 8 — Simplified Schematic of One Output Circuit

Instruction Bulletin

Subject: **SY/MAX® LOCAL/REMOTE INTERFACE CLASS 8030 TYPES CRM-210, 211, 220, 222**

DESCRIPTION:

This instruction bulletin is intended to explain the remote input/output capability of the SY/MAX PC Family. It will show how to use the local interface module (CRM-210, CRM-211) and the remote interface module (CRM-220, CRM-222) for a large I/O system (greater than 128 I/O) or a remote I/O system.

Although general information about the local and remote modules is included, it is assumed that there is a familiarity with SY/MAX Family hardware and programming equipment procedures.

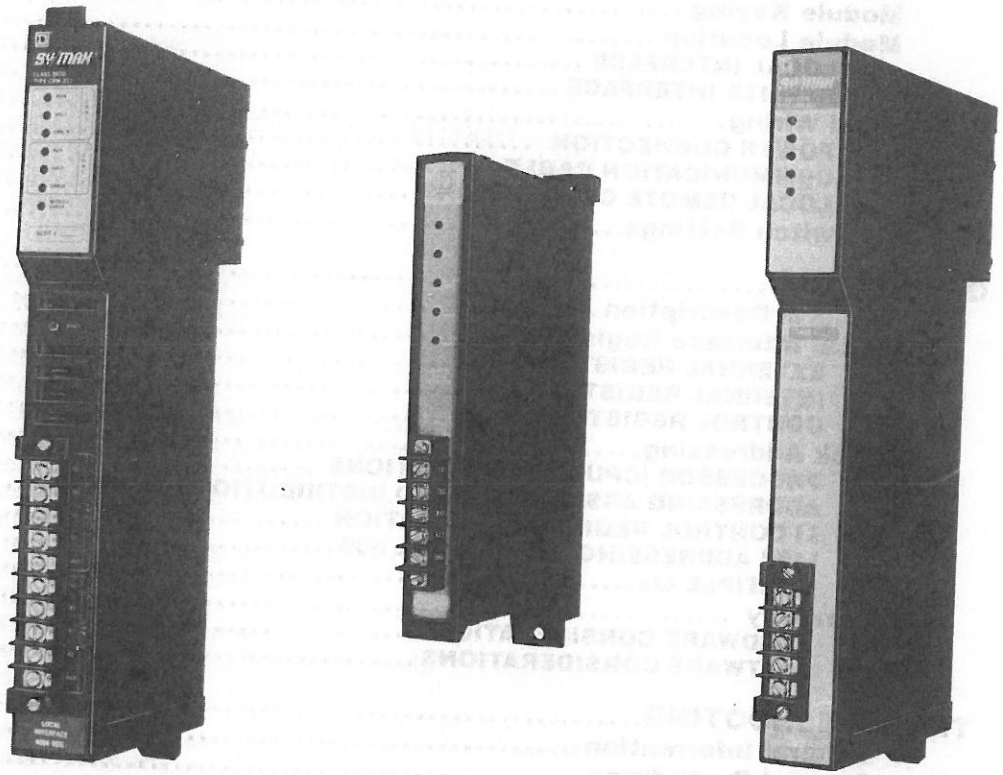

CAUTION

Square D interface modules with different capabilities may be physically interchangeable. Replacement interface modules should be of the same class and type. *Any time* a replacement is made, the interface's capabilities, processor operation and user programs must be compatible. Refer to the appropriate instruction bulletin for more information.

ATTENTION

This device contains static sensitive I.C.'s and is subject to damage by electrostatic discharge. Do not handle device by gold edge contacts.

© Square D Company, 1985

TABLE OF CONTENTS

Section	Title	Page
1.0	INTRODUCTION	5
1.1	General Information	5
1.2	Summary of Operation	5
2.0	SPECIFICATIONS	6
2.1	General Information	6
2.2	Electrical	6
2.2.1	CURRENT DRAW	6
2.2.2	CAPABILITIES	6
2.2.3	COMPATIBILITY WITH PROCESSORS	6
2.2.4	COMPATIBILITY WITH RACKS	6
2.2.5	COMPATIBILITY WITH I/O	6
2.3	Environmental	7
2.4	Physical	7
3.0	INSTALLATION	7
3.1	General Information	7
3.2	Inspection	7
3.3	Module Keying	7
3.4	Module Location	7
3.4.1	LOCAL INTERFACE	8
3.4.2	REMOTE INTERFACE	8
3.5	Field Wiring	8
3.5.1	POWER CONNECTION	8
3.5.2	COMMUNICATION CABLE	8
3.5.3	LOCAL/REMOTE CONNECTIONS	8
3.6	RI Switch Settings	8
4.0	OPERATION	9
4.1	General Description	9
4.2	Local Interface Registers	9
4.2.1	EXTERNAL REGISTERS	9
4.2.2	INTERNAL REGISTERS	10
4.2.3	CONTROL REGISTERS	10
4.3	Rack Addressing	10
4.3.1	PROCESSOR (CPU) CONSIDERATIONS	10
4.3.2	ADDRESSING ASSIGNMENT AND DISTRIBUTION	10
4.3.3	LI CONTROL REGISTER ALLOCATION	10
4.3.4	LI/RI ADDRESSING WITH MODEL 500	10
4.3.5	MULTIPLE LIs	11
4.4	Summary	13
4.4.1	HARDWARE CONSIDERATIONS	13
4.4.2	SOFTWARE CONSIDERATIONS	13
5.0	TROUBLESHOOTING	14
5.1	General Information	14
5.2	General Procedures	14
5.2.1	CPU PROCESSOR MALFUNCTION	14
5.2.2	COMPONENT FAILURE	14
5.2.3	USER SOFTWARE PROGRAM ERROR	14
5.3	LI/RI LED Explanation	14
5.4	Isolation Procedures	14
5.5	Module Replacement Procedure	16
5.6	LI/RI Communication Restart (Push Button)	16
5.6.1	FROZEN DROP RESET	17
5.7	CPU and LI/RI Response to Faults	17
5.8	Obtaining Additional Assistance	17

APPENDIX	TITLE	PAGE
A.0	LI/RI UPDATE TIME	18
B.0	ERROR CODES	20
C.0	CHANNEL EXPANSION	28
D.0	LI CONTROL/STATUS REGISTERS	29
E.0	LI/RI POWER UP SEQUENCE	33
F.0	LI/RI ADDRESSING WITH MODEL 300	34

LIST OF FIGURES

Figure Number	Description	Page
1.1	Local/Remote System	5
1.2	Local Interface Features	5
1.3	Remote Interface Features	5
2.1	Maximum Channel Update Times (Digital I/O Only)	6
2.2	Maximum Channel Update Times (Register and Digital I/O)	6
2.3	Model 300 Compatibility	6
2.4	Rack Compatibility	7
3.1	Module Keying	7
3.2	Local Interface Location	8
3.3	Remote Interface Location	8
3.4	LI/RI Wiring Connections	8
3.5	RI Switch Settings	9
3.6	RI Module Labels	9
4.1	CPU Address Capabilities	10
4.2	Local (Model 500 CPU) Rack Address Assignments	11
4.3	Channel 1, Drop #1 Rack Address Assignments	11
4.4	Channel 1, Drop #2 Rack Address Assignments	11
4.5	Channel 2, Drop #1 Rack Address Assignments	12
4.6	LI Register Map	12
4.7	Local (CPU) Rack Address with Multiple LIs	13
5.1	LI LED Explanation	15
5.2	RI LED Explanation	15
5.3	LI/RI LED Response to Errors	16
5.4	CPU and LI/RI Response to Remote I/O Faults	17
5.5	Equipment List	17
A.1	Digital Channel	18
A.2	Register Channel	18
B.1	A Typical P.C. System	26
D.1	LI Control/Status Register Assignments	29
D.2	LI Control Data Register	30
D.3	LI Control Status Register	31
F.1	Local (Model 300 CPU) Digital Rack Address Assignments	34
F.2	Channel 1, Drop #1 Rack Address Assignments	34
F.3	Channel 1, Drop #2 Rack Address Assignments	34
F.4	Channel 2, Drop #1 Rack Address Assignments	35
F.5	Local (Model 300 CPU) Register Rack Address Assignments	35
F.6	Channel 1, Drop #1 Rack Address Assignments	36
F.7	Channel 1, Drop #2 Rack Address Assignments	36
F.8	Channel 2, Drop #1 Rack Address Assignments	36

1.0 INTRODUCTION

1.1 General Information

The local and remote interface (LI and RI) system for the SY/MAX programmable controller Family provides a versatile method of handling a wide variety of local and remote I/O and register module configurations. It has the interfacing capability to handle everything from the smallest single task machines to systems requiring thousands of remote I/O and register functions.

This bulletin provides the basics to configure a remote I/O system to meet a PC system design needs with a minimum of hardware, thereby reducing the total cost and time required for implementation of the control scheme.

1.2 Summary of Operation

By utilizing the SY/MAX LI and RI modules, both digital and register racks can be located remotely from a SY/MAX processor. The modules allow communication with the processor over a two pair, twisted, shielded cable, greatly reducing the cost of control wiring to the remote electrical inputs and outputs.

To establish a remote I/O system, an LI module is mounted in the rack containing the processor and an RI module is mounted in the remote rack (referred to as a drop). The dual twisted shielded pair cable is connected to a removable terminal strip on the face of each module.

As shown in Figure 1.1, the LI module has two communication channels. Each channel may consist of a chain of up to 8 drops (digital or register racks). More than one LI module may be used with many of the SY/MAX Family processors, depending upon system requirements.

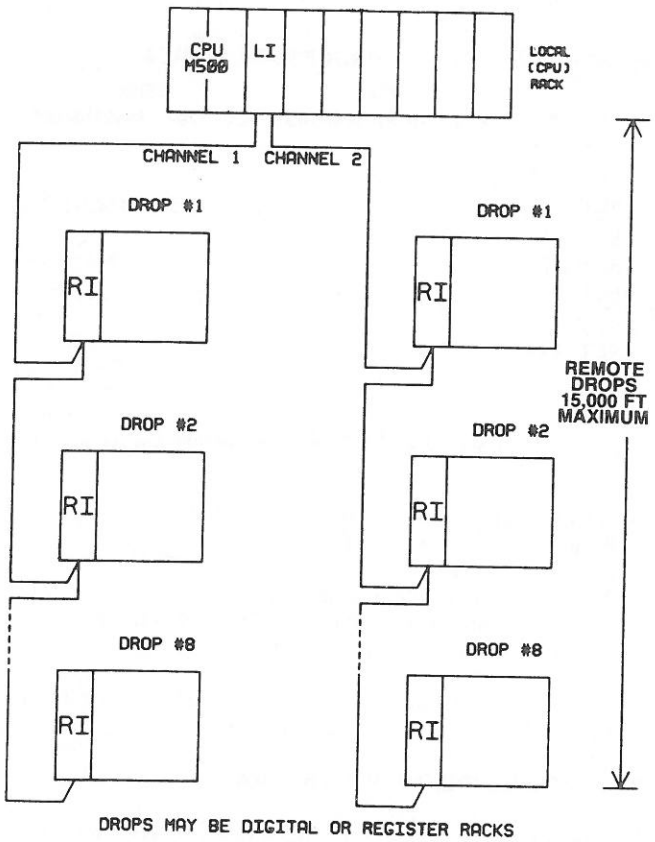

Figure 1.1 - Local/Remote System

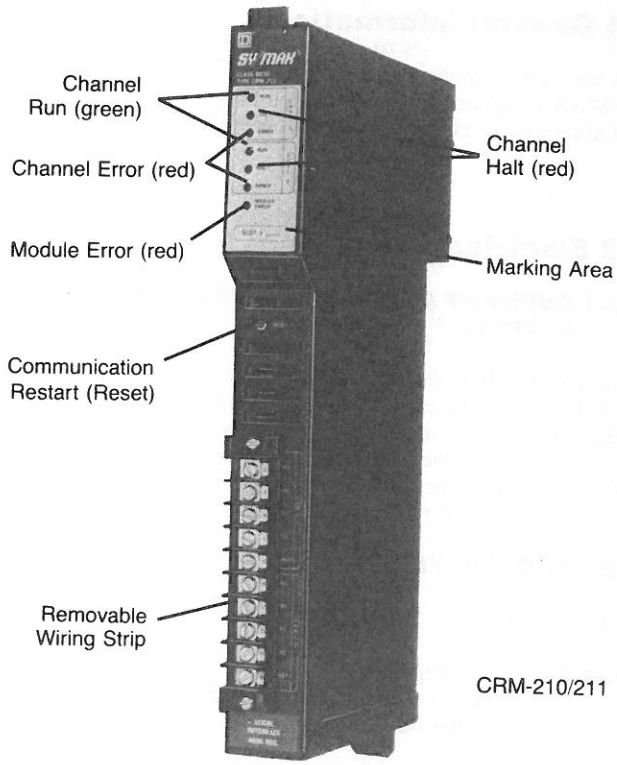

Figure 1.2 - Local Interface Features

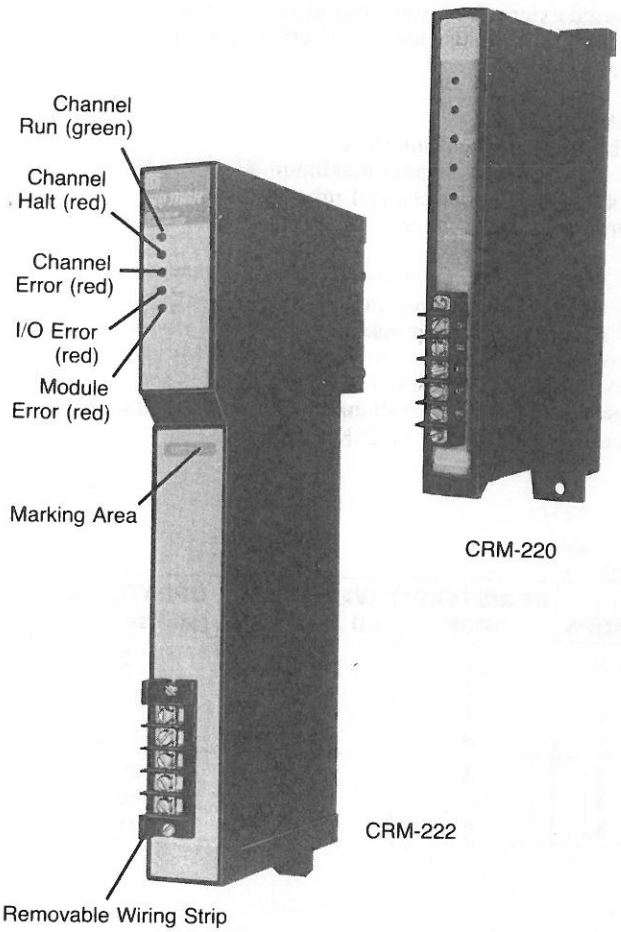

Figure 1.3 - Remote Interface Features

2.0 SPECIFICATIONS

2.1 General information

The local and remote interface modules, as well as the entire SY/MAX Programmable Controller Family is designed and manufactured to comply with U.L. requirements.

2.2 Electrical

2.2.1 CURRENT DRAW (ON SY/MAX POWER SUPPLY)

8030 CRM-210 Local w/512 Registers ..... 1600 mA
8030 CRM-211 Local w/4096 Registers ..... 1600 mA
8030 CRM-220 Remote (low profile module for 4 function digital rack mounting) . 1000 mA
8030 CRM-222 Remote (standard size module for all rack mounting)..... 1000 mA

2.2.2 CAPABILITIES

REGISTERS

CRM-210 = 512 registers
(255 for external drop addressing, 257 for internal data storage*)

CRM-211 = 4096 registers
(255 for external drop addressing, 3841 for internal data storage*)

*Unused external registers may also be used for internal data storage. All registers used for internal data storage are retentive.

CHANNELS
2 Channels per local interface.
255 Registers per channel maximum.
1024 Digital I/O per channel maximum.
8 Drops per channel.

DROPS
128 Digital I/O per drop maximum.
127 Registers per drop maximum.

COMMUNICATIONS
Method — Continuous full duplex serial differential (RS422)
Transmission Rate — 31.25K Baud

DROPS	REGISTERS/ DROP	AVAILABLE I/O POINTS	UPDATE TIME (Milliseconds)
1	1	16	5.1
1	2	32	7.1
1	4	64	11.1
1	8	128	19.1
2	8	256	29.4
4	8	512	50.0
8	8	1024	91.3

Figure 2.1 Maximum Channel Update Times (Digital I/O Only)

DROPS	REGISTERS/ DROP	TOTAL REGISTERS	UPDATE TIME (Milliseconds)
1	4	4	14.6
1	8	8	24.5
1	16	16	34.4
1	32	32	54.3
1	64	64	94.0
1	127	127	172.1
2	8	16	36.0
2	16	32	55.8
2	32	64	95.5
2	64	128	166.5
2	127	254	332.7
4	16	64	103.4
4	32	128	182.8
4	64	254	341.5
6	16	96	220.4
6	32	192	260.4
8	16	128	195.4
8	32*	255	352.9

* One drop has only 31 registers.

Figure 2.2 - Maximum Channel Update Times (Register and Digital I/O)

2.2.3 COMPATIBILITY WITH PROCESSORS

The local/remote interface system is compatible with all Model 500 and 700 SY/MAX Processors. Multiple LIs may be used with Models 500 and 700. The Model 300 can support one LI Module.

The following Class 8030 Model 300 Processors are also compatible:

PROCESSOR	PROCESSOR SERIES	
TYPE	W/O Control Functions*	With Control Functions*
SCP 311	E	
SCP 312	E	
SCP 313	D	
SCP 321	D	
SCP 322	D	
SCP 323	C	
SCP 332	D	
SCP 333	D	
SCP 344	C	

Figure 2.3 - Model 300 Compatibility

*Control functions consist of the following:
1. Programmed halting of drops.
2. Failure override.
3. Auto restart after communications loss.
4. Freeze the outputs of drop upon a detected communication failure or local (CPU) rack error.

For additional information about these functions, refer to Appendix D, LI Control/Status Registers.

2.2.4 COMPATIBILITY WITH RACKS

The local interface module (LI) must be mounted in a register slot of the CPU rack while the remote interface module (RI) is mounted into the CPU slot of a remote rack.

RACK TYPES	LOCAL INTERFACE	REMOTE INTERFACE	
	TYPES CRM-210, 211	Type CRM-220	Type CRM-222
CRK-100, 200	NO	YES	YES
CRK-210, 300 DRK-210, 300 GRK-110, 210	YES	YES	YES
HRK-100, 200 RRK-100, 200	YES	NO	YES

Figure 2.4 - Rack Compatibility

2.2.5 COMPATIBILITY WITH I/O

The local/remote interface system is compatible with:

All register modules.
All 8 point I/O modules.
All 4 point input modules.
All 4 point output modules, Series B or later.
Bus Expander, Class 8030 Type CRM-115/116, Series D or later.

2.3 Environmental

Ambient Temperature
Operating 0°C to 60°C (32° to 140°F)
Storage -40°C to 80°C (-40° to 176°F)

Humidity 95% non-condensing

2.4 Physical

Dimensions (WxHxD)
CRM-210, 211, 222 1.5 x 12.8 x 6.6 in.
3.81 x 32.5 x 16.76 cm
CRM-220 ..... 1.5 x 9.6 x 6.6 in.
3.81 x 24.4 x 16.76 cm

Weight (approximate)
CRM-210, 211, 222 3.0 lbs.
1.36 kg.
CRM-220 ..... 1.0 lb.
0.45 kg.
Terminal strips
CRM-210, 220.... Part Number 25410-02529
CRM-220 ..... Part Number 30605-255-01
CRM-222 ..... Part Number 25410-02526

3.0 INSTALLATION

3.1 General Information

CAUTION: To prevent possible equipment damage, remove power from all local and remote racks before inserting or removing any component including the interface modules or LI/RI communication cables.

3.2 Inspection

Although each module is subjected to strict quality control procedures, give each module a visual inspection before installation. Check for any shipping or handling damage that may have occurred. If damage is found, do not use the module, replace it.

1. Inspect the LEDs to ensure they are visible.
2. Examine the field wiring terminals for damage. Inspect the hold down screw on the lower portion of the LI and RI to verify the screw is securely attached to the module.
3. Examine the upper rear of the module to ensure the mounting plate is secure.
4. Inspect the printed circuit board edge connector for damage.

3.3 Module Keying

Each register or CPU slot on a rack assembly may be keyed. An optional keying pin kit is available for this purpose.

The keying pin may be inserted manually into the slot using the keying pin insertion tool provided with the kit.

The correct positioning of the keying pin for the LI and RI modules follows:

TYPE	DESCRIPTION	PIN LOCATION
CRM-210	Local Interface (LI) Module w/512 Registers	Between 92 & 94
CRM-211	Local Interface (LI) Module w/4096 Registers	Between 92 & 94
CRM-220	Remote Interface (RI) Module (for 4 function digital racks)	None
CRM-222	Remote Interface (RI) Module (for all type rack assemblies)	None

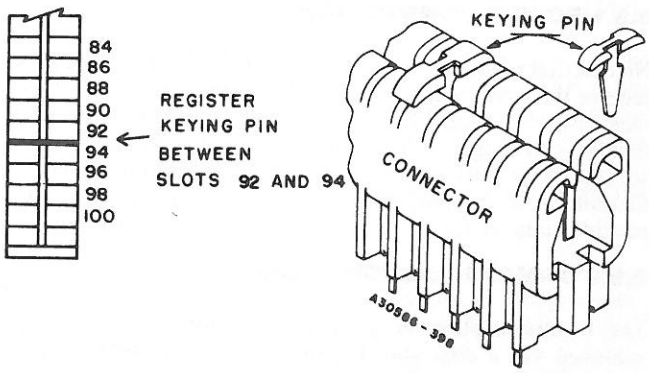

Keying Pin Location Keying Pin Insertion

Figure 3.1 - Module Keying

3.4 Module Location

3.4.1 LOCAL INTERFACE

The local interface module (LI) must be placed in the same rack assembly as the CPU. When a register rack is used to house the CPU, the LI module should be placed in the next closest slot. If more than one LI module is required, place additional modules in adjacent slots.

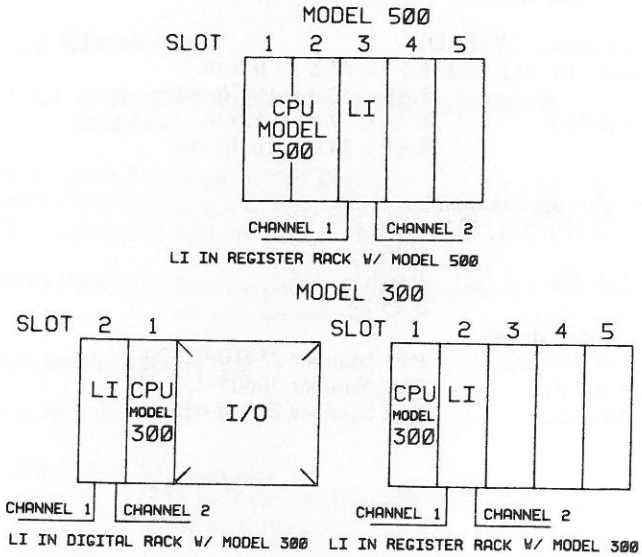

Figure 3.2 - Local Interface Location

3.4.2 REMOTE INTERFACE

The remote interface module (RI) must be placed into the CPU slot of any rack which is to be a drop.

Only one RI is required and allowed for each drop.

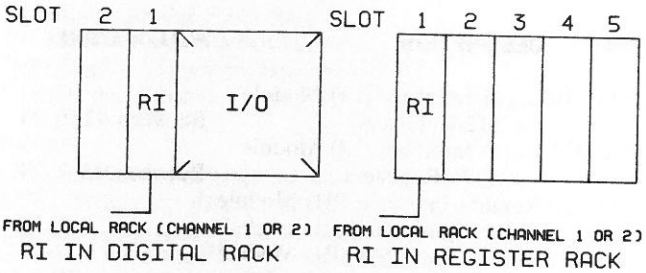

Figure 3.3 - Remote Interface Location

3.5 Field Wiring

3.5.1 POWER CONNECTION

No external power wiring is required. The LI and RI modules receive their power through the edge connector socket of the rack assembly. Insert the LI module in the register slot until firmly seated against the stud (the middle post above the socket in that slot) and tighten the captive mounting screw at the bottom of the module. These two connections not only provide support for the module but also provide a ground.

3.5.2 COMMUNICATION CABLE

The communication between the LI and RI modules is achieved via a dual shielded twisted pair cable. A hinged plastic flap covers the detachable terminal strip. In order to minimize the potential of electrical interference:

1. Route communication cable in different wire ducts than the power wiring is routed.
2. Connect each end of the communications cable shield to the shield terminal on each module.

Transmission cable should be electrically equivalent to:

Cable Type	Maximum Length	Conductor-Conductor Capacitance
Belden 8723	7,500 feet	35 pf/ft.
Belden 9463*	15,000 feet	19.7 pf/ft.

*Dual cables required.

NOTE: ADDITIONAL DATA LINE PROTECTION
In environments where lightning or induced transients over communication lines are likely to cause hardware failures, signal line protection devices are recommended. Even though transient protection is designed into our SY/MAX communication circuits, additional specialized protection devices are suggested in areas where there is a high probability of secondary lightning strikes occurring. The specific environments which are of greatest concern are where communication cable runs are in the outside environment. For more detailed information pertaining to your application, contact your local Square D representative.

3.5.3 LOCAL/REMOTE CONNECTIONS

The preferred method of wiring from one module to the next is daisy chain. However, when Belden cable 8723 is used a star configuration may be used provided a maximum of four branches per channel be wired. A branch may contain 1 to 8 drops wired in a daisy chain fashion, with a maximum of eight drops per LI channel. The total allowable cable distance for each channel remains 7500 ft. Always connect the shield wire to the shield terminals.

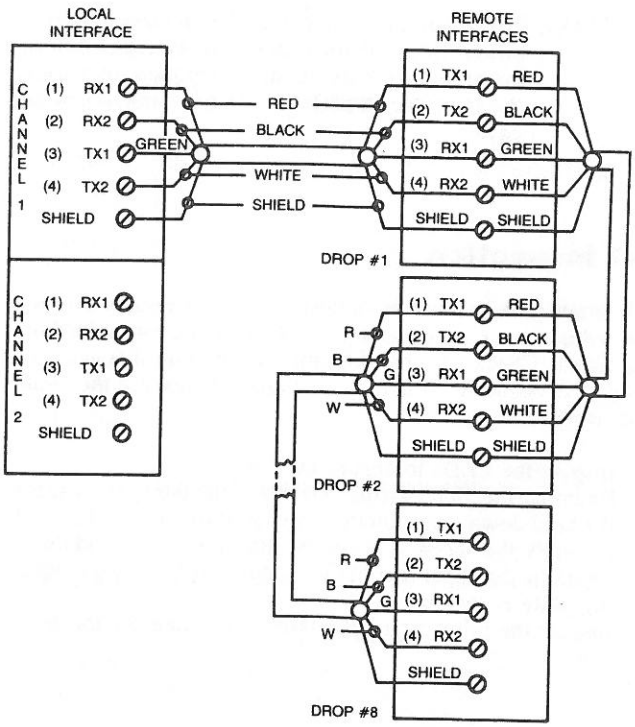

Figure 3.4 - LI/RI Wiring Connections

3.6 RI Switch Settings

The RI Module has four dip switches on the rear of the module near the edge of the circuit board. A module must be assigned as one of the eight drops on a specific channel. The switches must be set for the system to operate properly.

Set the switches for the appropriate drop as shown in Figure 3.5 - RI switch settings.

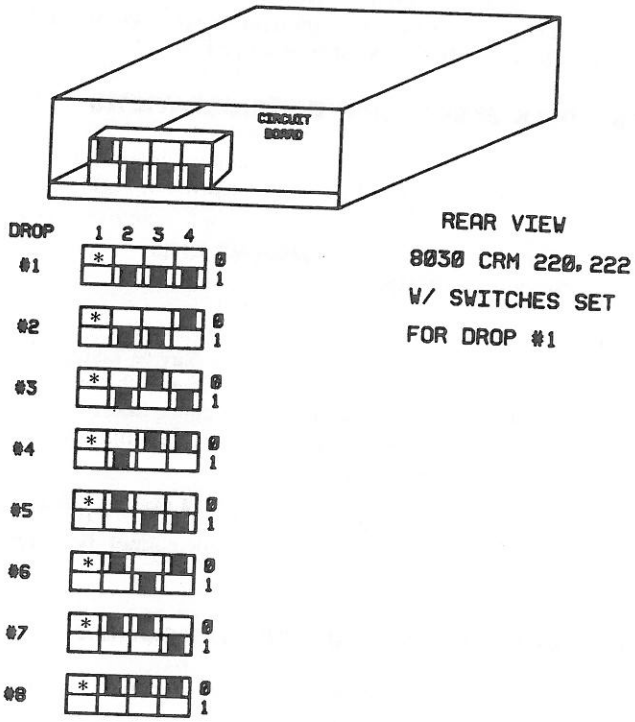

*For each channel, the drop (RI module) farthest from the LI must have switch 1 set ON, to a (1). Only one drop per channel requires this switch to be set. Failure to do so may result in a noise susceptible communications link.

Figure 3.5 - RI Switch Settings

Label terminology may vary. The following equivalent terms are used:

0	O	UP	OPEN	OFF
1	X	DOWN	CLOSED	ON

Either one of these labels will be located on the side of the RI module.

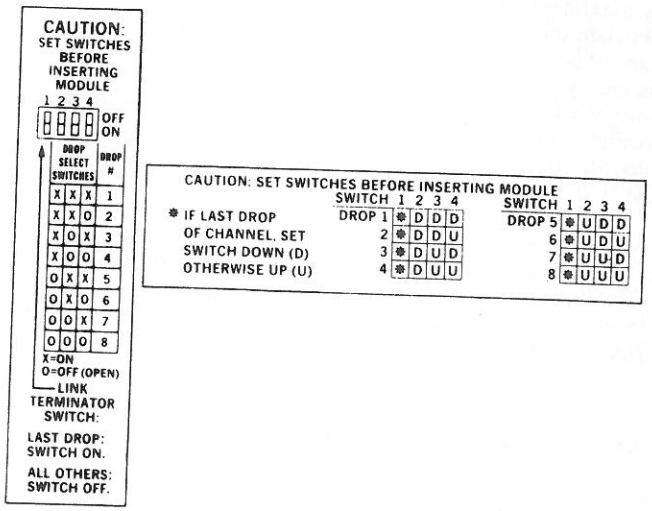

Figure 3.6 - RI Module Labels

4.0 OPERATION

4.1 General Description

Local and remote interface modules allow a programmable controller to communicate with remote I/O (digital and register input and output type devices).

The LI/RI interface system consists of:

1. A local interface module (LI) which plugs into a register slot of the rack containing the CPU.
2. A remote interface module (RI) placed in the CPU slot of a digital I/O rack or the first slot of a register rack.
3. An interconnecting cable between the LI and RI(s) consisting of dual twisted shielded pair.

Both the LI and RI modules have diagnostic LED's indicating the status of the communication link, individual drop operation and module operation.

The local/remote I/O interface system is a high speed serial, multi-channel, multi-drop system. The local interface (LI) receives instructions from the CPU. The LI then serializes this information and transmits it to the appropriate remote interface (RI). An LI module does this over either of its two independent communication channels. Each channel operates full duplex at a rate of 31.25K baud.

The RI interprets this data, verifies and acknowledges it and then acts accordingly. The information being exchanged is stored in an image table located in each LI and RI.

The continuous exchange of information between the LI and RI image tables is independent of the CPU scan. Transmitted information includes ON/OFF commands for I/O as well as storage register information and housekeeping functions (i.e. loss of communications, error control, freeze or reset of I/O).

The LI module stores control register information while the RI maintains its own specific drop information. This information (user programmable bits) defines the action to be taken in the event of a fault at any drop. It can allow the operational drops to keep running or to shutdown. The shutdown state of the outputs will then be either a reset (OFF) or freeze (last state) condition.

Actual programming steps are described in the programming equipment instruction bulletins. For details on user programmable bits, refer to Appendix D, LI Control/Status Registers.

4.2 Local Interface Registers

Two versions of the LI module are available. The first, Class 8030 Type CRM-210, has 512* registers; and the second,

Class 8030 Type CRM-211, has 4096* registers. With either version LI, the first 255** registers are available for external addressing of inputs, outputs, register modules, storage registers or as internals. The remaining registers (257 for CRM-210, or 3841 for CRM-211) are only available for use as internal relay equivalents, timers, counters, and data storage.

*Although the registers exist, the ability to address them is dependent upon the type of CPU used.
**Any of the 255 registers not assigned to drops may be used as internals.

4.2.1 EXTERNAL REGISTERS

A maximum of 255 consecutive registers can be assigned between the two independent LI channels. Each LI channel can support up to 8 drops. (A drop is a remotely located rack assembly.) Any drop may have a maximum of 127 registers assigned to it. The first 8 registers assigned to a drop are available for digital or register I/O. (i.e. 8 registers x 16 bits provide for 128 I/O points per drop). Any registers beyond the first 8 are only for register I/O.

Typically, the registers assigned to drops will be reset to zero (OFF) upon processor halting or power loss. However, it is possible to freeze (maintain last state) registers assigned to drops. For more information, refer to Appendix D, LI Control/Status Registers.

4.2.2 INTERNAL REGISTERS

Internal registers (those not assigned to drops) retain information when the processor halts or there is a loss of main power. The clearing of these registers is dependent upon processor action.

4.2.3 CONTROL REGISTERS

All LI modules have an error code register and a channel control register for each serial channel. These registers monitor and provide additional control of the remote I/O. For more information, refer to Appendix B, Error Codes and Appendix D, LI Control/Status Registers.

4.3 Rack Addressing

Rack Addressing (also referred to as System Definition) is a user programmable identification scheme that enables a SY/MAX Processor to obtain information about a specific I/O point or register.

It maps the physical location of where the processor (CPU) will "look" for a specific address and its associated information when required.

Once the register addresses have been assigned, they are fixed. If a change in address assignments is required, the user rack addressing software must be changed.

4.3.1 PROCESSOR (CPU) CONSIDERATIONS

The CPU determines the maximum system addressing range. SY/MAX Processor capabilities are as shown in Figure 4.1.

4.3.2 ADDRESSING ASSIGNMENT AND DISTRIBUTION

All address assignments must be made in a sequential and ascending order. The first 255 LI registers may be assigned to channel 1 and then to channel 2. Each of these channels can be further divided into 8 drops. The register addresses for each drop may be further distributed in ascending order to individual slots of the remote drops.

Internal addresss begin after external addresses have been assigned. Internal and external registers cannot be intermixed.

4.3.3 LI CONTROL REGISTER ALLOCATION

LI control registers are dynamically assigned on the basis of physical position and rack addressing.

1. LI control registers are assigned in a descending order starting with S8163 for the LI with the lowest numbered CPU rack slot number.
2. LI control registers are further defined by the number of channels used.

For example, if only channel 1 is assigned to the first LI, there will be no control register assigned to channel 2. S8163 is the error code control register. S8162 is the channel control register for channel 1, S8161 is left unassigned.

If an additional LI is put in a higher numbered CPU slot, it would be assigned the *next* available control register, i.e. S8161 becomes the second LI error code register. S8160 is the control register for channel 1 of the second LI. S8159 is unassigned and available for channel 2 or for a third LI's error code register. If only channel 2 is defined, the system automatically assigns a control register to channel 1 whether channel 1 is used or not.

For more information on the operation of the LI control registers, refer to Appendix B, Error Codes and Appendix D, LI Control/Status Registers.

CPU Model	Register Addressing Capability	Self Contained CPU Registers	Maximum Supportable LI Modules	Practical I/O Capability
300	112 (1)	112	1	256
500	2008 (2)	460 (3)	7	2000
700	8000 (2)	0	7	8000

(1) Only the bits of the first 16 registers may be forced ON/OFF.
(2) Only the bits of the first 256 registers in each LI may be forced ON/OFF.
(3) For internal use only as relays and storage registers.

Figure 4.1 - CPU Address Capabilities

4.3.4 LI/RI ADDRESSING WITH MODEL 500

The following example is used to illustrate the concept of address assignment.

This example consists of a Model 500 system with two remote I/O channels. The first channel handles 256 digital I/O points and one register module. Two remote drops are used to handle these requirements. The second channel consists of a register rack with 5 register modules.

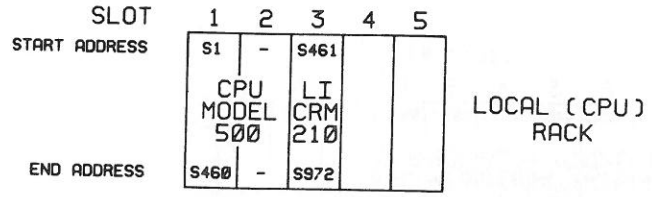

Figure 4.2 - Local (Model 500 CPU) Rack Address Assignments

LOCAL (CPU) RACK

Slot 1 - The Model 500 has been assigned all of its 460 internal registers. (S1 thru S460)

Slot 2 - The Model 500 physically takes up two slots therefore, slot 2 has no address assignments required.

Slot 3 - The LI module (CRM-210) has been assigned all of its 512 registers. (S461 thru S972)

Slot 4, 5 - No address assignments required.

Assigning all available registers to the CPU and LI does not affect the CPU scan. Note that the first register of the LI has a start address of S461, one more than the assigned end address of the processor. The LI end address is S972 which is 512 more than the end address of the processor.

Note that the start and end addresses of the system slots are shown. However, when programming addressing assignments, only ending addresses can be entered. Starting addresses are automatically assigned beginning with the next available register. For a full explanation of the step by step rack addressing programming procedure, refer to the CRT Programmer Instruction Bulletin.

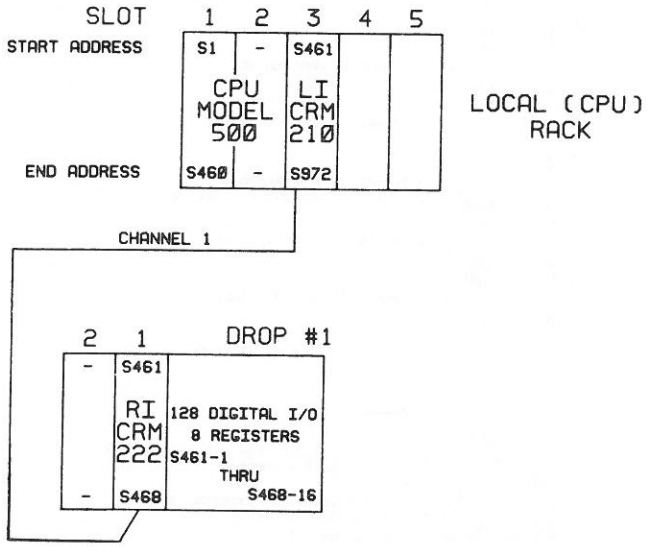

Figure 4.3 - Channel 1, Drop #1 Rack Address Assignments

CHANNEL 1, DROP #1

Slot 1 - To handle 128 digital I/O points, 8 - 16 bit registers are required. (S461-1 thru S468-16)

Note that the addresses for digital I/O are always assigned to slot 1.

Slot 2 - No address assignments required.

CHANNEL 1, DROP #2

The next order of business is to add another drop to an already existing channel. This drop also has 128 digital I/O points but unlike drop #1, it has a register module. The module is in the register slot, (slot 2) which requires 16 register addresses.

Slot 1 - 8 registers are assigned for the 128 digital I/O. (S469-1 thru S476-16).

Slot 2 - 16 registers are required for the register module. (S477 thru S492).

The total requirements for this drop is 24 registers. Observe that the start address for drop #2 is one more than the end address for drop #1. The first digital address for drop #2 is S469-1 and the last digital address is S476-16. Therefore, slot 1 has an ending register address of S476. Slot 2 ends at S492, allowing for the required 16 registers needed by the register module.

This process of adding a drop at a time in a daisy chain fashion could be continued until all 255 registers were assigned to a channel or until all 8 drops had been assigned.

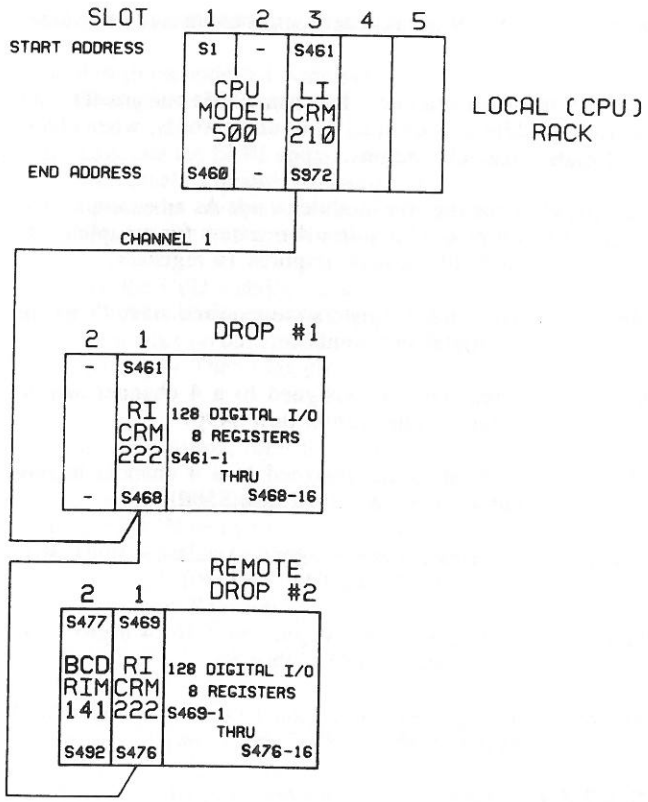

Figure 4.4 - Channel 1, Drop #2 Rack Address Assignments

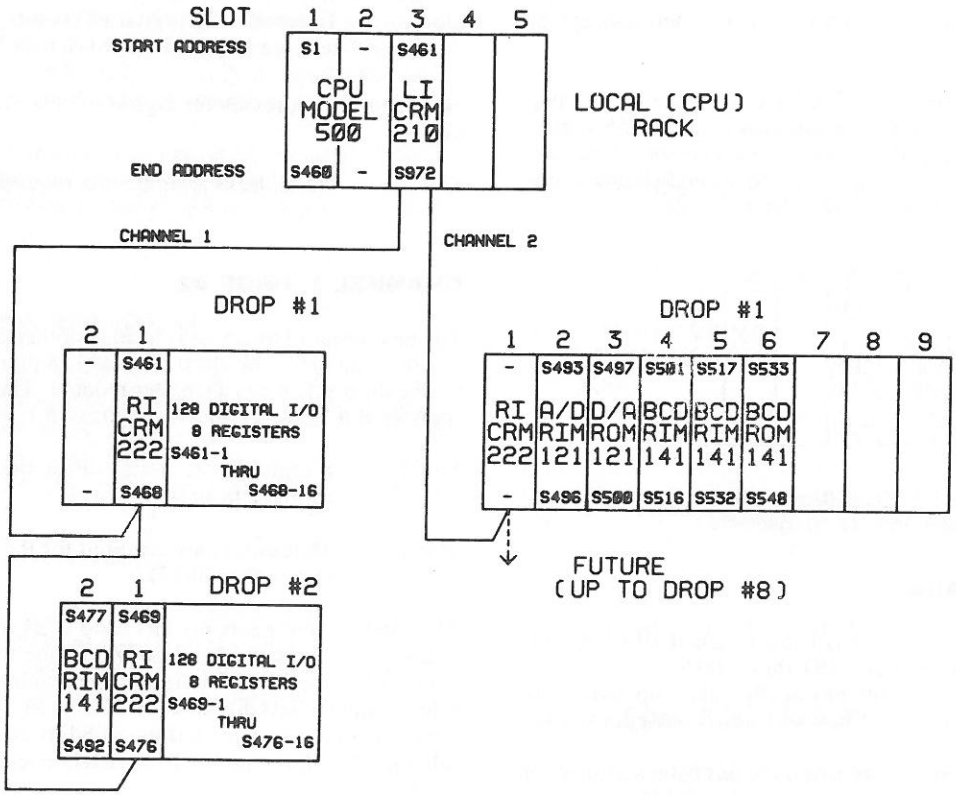

Figure 4.5 - Channel 2, Drop #1
Rack Address Assignment

CHANNEL 2, DROP #1

In this example, a 9 slot register rack is connected to channel 2.

Note that the starting address for channel 2 is one greater than the ending address of channel 1. In other words, when channel 1 ends, channel 2 begins.

Requirements for register modules vary. As an example, a 4 channel analog module requires 4 registers for complete addressing. A BCD I/O module requires 16 registers.

Slot 1 - No address registers are required since there are no digital I/O points.

Slot 2 - 4 registers are assigned to a 4 channel analog input module. (S493 thru S496)

Slot 3 - 4 registers are assigned to a 4 channel analog output module. (S497 thru S500)

Slot 4 - 16 registers are assigned to a 16 (4 digit) BCD input module. (S501 thru S516)

Slot 5 - 16 registers are assigned to a 16 (4 digit) BCD input module. (S517 thru S532)

Slot 6 - 16 registers are assigned to a 16 (4 digit) BCD output module. (S533 thru S548)

Slot 7,8,9- No address assignments required.

The total number of registers required for this drop is 56. Note the beginning and ending addresses for each slot are sequential and in ascending order.

LI ADDRESS DISTRIBUTION MAP

Here is a map of how the first LI has been user programmed in this example.

Observe that the LI has a fixed number of registers and rack addressing has assigned a unique address to each one.

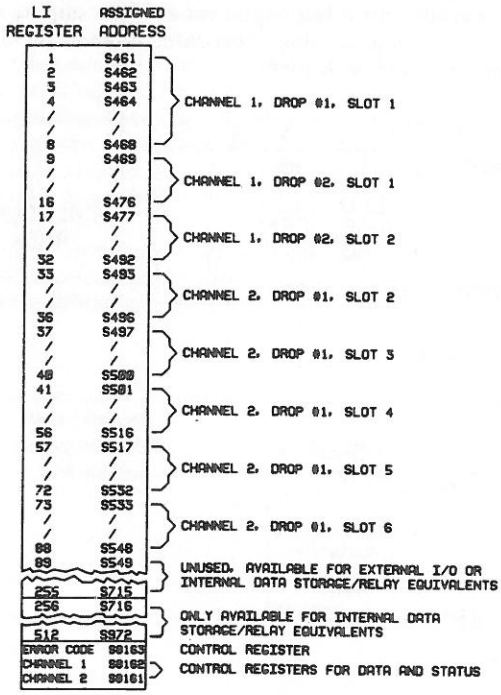

Figure 4.6 - LI Register Map

4.3.5 MULTIPLE LIs

If more drops or registers are required than those that can be supported by the present LI, merely add an additional LI module.*

An LI module only provides storage register locations to a processor which possesses the capability to address them. The LI module does not increase the CPU addressing range capability.

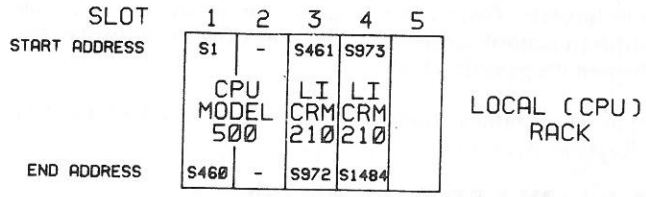

Figure 4.7 - Local (CPU) Rack Addresses with Multiple LIs

LI control register assignments are dependent upon LI position and number of channels used.

*The number of LIs per system is CPU dependent, the Model 300 will support only one LI Module.

4.4 Summary

These steps should be looked at prior to setting up any LI/RI system.

1. Sketch out the physical system configuration, (rack assemblies, power supplies, I/Os, etc.).
2. Determine the address allocations based upon requirements of the system.
3. Consider the system response time. Refer to Appendix A, LI/RI Update Time.

4.4.1 HARDWARE CONSIDERATIONS

1. Determine the physical I/O requirements including future expansion. (Quantity, voltages, racks.)
2. Determine I/O locations and number of drops required as well as I/O per drop.
3. Determine the type of register modules required, including future expansion.
4. Determine the location of register modules, quantity, and types of racks required.
5. All modules used with the local/remote interfaces must be of compatible series.
6. Communications devices should be powered down when connecting and disconnecting communication cabling. If a communication wire were to be shorted, premature chip failure may result.
7. The LI module is always installed in the local CPU rack assembly.
8. The RI module is always installed in slot 1, the CPU slot of the remote drop.

4.4.2 SOFTWARE CONSIDERATIONS

1. Only qualified personnel should ever program or implement action which may override the default system operations. A thorough understanding of the control bits is required. If any control bits are misapplied, adverse consequences may result.
2. Any detected system error will result in the system halting. However, it is possible to override the halting of the total system when an error is in the remote location, dependent upon the severity of the error detected.
3. All digital I/O address on a drop must be assigned to slot 1.
4. No registers need be assigned to slot 1 of a register rack used as a drop.
5. Register Planning

   Register and I/O distribution for present and future needs should be considered prior to attempting any register address allocation (rack addressing).

   For effective distribution of register addresses:

   A. Distribute external addresses evenly among channels. This allows for a uniform LI/RI update time.

   B. Examine the LI/RI update time. If it is too long, add an additional LI module to obtain more channels. This will reduce the number of registers per channel. For more detail, refer to Appendix A, LI/RI Update Time.

Determine the CPU's ability to access the registers in the LI. For more information, refer to Figure 4.1 and the appropriate processor instruction bulletin. Remote drop addressing must be done sequentially. Therefore, plan to add future remote drops to channel 2.

For more information, refer to Appendix C, Channel Expansion.

6. CPU will go into the RUN mode only if all the drops are operational. Note that a drop may be made to appear operational by setting a channel control register Failure Override Bit ON (1). For more information, refer to Appendix D, LI Control/Status Registers.

5.0 TROUBLESHOOTING

5.1 General Information

This section explains the procedures for troubleshooting the local and remote interface (LI/RI) system. Following the outlined procedures will aid in evaluating a malfunctioning system.

5.2 General Procedures

Always do the following:

1. Examine and note what the system is doing and has failed to do.
2. Examine and note the LED states on the LI/RI interfaces. (Refer to Figure 5.1 and Figure 5.2, LI and RI LED Explanation.)
3. With a CRT, examine and note the control register information. (Refer to Appendix D, LI Control/Status Registers.)

There are three primary types of malfunctions which can occur within the SY/MAX Family LI/RI systems.

1. A CPU processor malfunction.
2. Component failure.
3. User software program error.

5.2.1 CPU PROCESSOR MALFUNCTION

If a CPU processor malfunction is suspected, refer to the appropriate processor and CRT programmer instruction bulletins for further troubleshooting procedures.

If, however, it appears the problem may be related to the LI/RI system or user control program software, continue in this section.

5.2.2 COMPONENT FAILURE

Besides the CPU, the malfunctioning of the following hardware components may cause the PC system to halt or continue to run in a partial mode.

LI MODULES
RI MODULES
REGISTER MODULES
I/O MODULES
RACK ASSEMBLY
POWER SUPPLY

Also, the system may halt if there is a lack of, or insufficient power at any location or a communication error.

Before replacing any hardware items, verify the problem by interpreting the LEDs and control register information.

5.2.3 USER SOFTWARE PROGRAM ERROR

A CRT programmer is helpful in analyzing LI/RI problems whether they are user created or system malfunctions. Use the monitor mode to display the following registers:

8175 - processor error code register. (data & status field)
8176 - processor control register. (data field)
8186 - processor read only status control register. (data field)
8163 - first LI Error Code Register. (data & status field)
8162 - first LI channel 1 Control/Status Register. (data & status field)
8161 - first LI channel 2 Control/Status Register. (data & status field)*

Note: The error code registers only display the most critical error detected prior to a total system shutdown. An error code may indicate either a specific register problem or it may be indicating the first register address of a block of registers where a problem has been detected.

Progressively inspecting all of the available CPU and LI control registers will aid in pinpointing the trouble area. Inspection of the channel control register data field (bits 1-8) will indicate what racks are halted due to the user program initiated control action while the status field will display the errored drops (bits 21-28).

*For more information, refer to Section 4.3.3 LI Control Register Allocation.

5.3 LI/RI LED Explanation

For a normally operating system, all of the associated CPU, LI and RI modules should have their RUN LED's illuminated. When a detected system change occurs, the LED's indicate the status of the system. If an error has occured, it will also indicate where the error most likely originated.

However, if any of the RUN LEDs are off, it does not necessarily indicate that a system malfunction has occurred. The system could be in some mode of operation other than RUN such as DISABLE OUTPUTS, or even a HALT condition by virtue of the user program.

In most cases, inspection of the LEDs will directly indicate the status of each communications link and "point" to the error source.

The meaning of the LI and RI modules LED states is depicted in figures 5.1 and 5.2.

If it is impractical to view all the diagnostic LEDs or if they do not readily indicate where the failure has originated, inspection of the error code registers of the CPU and LI will aid in finding a fault.

General error code register information is described in Appendix B, Error Codes.

5.4 Isolation Procedures

Note what the system is doing by examining the following:

1. LEDs

Determine which of the following LEDs are ON, FLASHING, or OFF.

A. CPU (system processor)
B. LI
C. RI

2. Error Registers

Determine the contents of the Error Code and Control Registers.

A. CPU (system processor register S8175)
B. LI register (i.e. S8163 for the first LI in a system) refer to Appendix B, Error Codes for further information.

LOCAL INTERFACE	
All lights OFF indicates loss of 5VDC power.	
RUN (green)	
ON -	Indicates LI is operational and CPU is accessing image table information.
OFF -	Indicates LI is in self-diagnostics or has failed.
FLASHING -	Indicates LI is running but one or more drops on its channels have been programmed to halt. (Bits 1-8 of the LI channel control register.)
HALT (red)	
ON -	Indicates LI is in self-diagnostics and/or has halted operation.
OFF -	Indicates LI is fully operational and CPU is accessing image table information.
FLASHING -	Indicates LI is running but one or more drops on its channels have been programmed to halt. (Bits 1-8 of the LI channel control register.)
CHANNEL ERROR (red)	
ON -	Indicates LI cannot communicate with one or more of its drops which are shutdown.
OFF -	Indicates all drops operational.
FLASHING -	Indicates a module failure on a drop has caused a drop to shutdown on this channel.
MODULE ERROR (red)	
ON -	Indicates a self diagnostic error or internal timeout error has been recognized and halted the CPU.
OFF -	Indicates LI is operational even though a channel HALT or CHANNEL ERROR LED may be ON.
FLASHING -	Not valid

Figure 5.1 - LI LED Explanation

REMOTE INTERFACE	
All lights OFF indicates loss of 5VDC power.	
RUN (green)	
ON -	Indicates remote drop is operational.
OFF -	Indicates RI is shutdown or has not been initialized. Outputs will de-energize provided the shutdown is not a direct result of a communication error, and the Freeze function is also selected. (Some register modules are capable of maintaining register information.)
FLASHING -	Indicates CPU is in Disable Outputs mode. (50% ON, 50% OFF alternately with HALT LED.)
BLINKING -	Indicates LI HALT bit for the drop is set. (5% ON, 95% OFF, alternately with HALT LED.)
HALT (red)	
ON -	Indicates RI is shutdown. If the only LED ON, it indicates rack was shutdown due to program control or has not been initialized.
OFF -	Indicates remote drop is operational.
FLASHING -	Indicates CPU is in Disable Outputs mode. (50% ON, 50% OFF alternately with RUN LED.)
BLINKING -	Indicates LI HALT bit for the drop is set. (95% ON, 5% OFF, alternately with RUN LED.)
CHANNEL ERROR (red)	
ON -	Indicates invalid or loss of communications between RI and LI. HALT LED will also be ON.
OFF -	Indicates valid communication between RI and LI.
I/O ERROR (red)	
ON -	Indicates: (HALT LED should also be ON.) 1. A read after write error to an output. 2. Error caused by a malfunctioning register module. 3. RI malfunction.
OFF -	Indicates RI is properly communicating with modules in same rack.
FLASHING -	Indicates outputs and inputs are frozen (ON or OFF).
MODULE ERROR (red)	
ON -	Indicates self diagnostic error or internal timeout error has occurred.
OFF -	Indicates RI is operational although drop may be shutdown due to system shutdown or program control.
FLASHING -	Not valid

Figure 5.2 - RI LED Explanation

3. Control Registers

   Determine the contents of the respective Channel Control Registers

   A. Channel 1, LI register (S8162 for the first LI in the system)
   B. Channel 2, LI register (S8161 for the first LI in the system) refer to Appendix D, LI Control/Status Registers for further information.

Progressive evaluation and interpretation of these bits indicate how to resolve, eliminate or compensate for the system malfunction.

5.5 Module Replacement Procedure

If it is necessary to replace components, use the following procedure:

1. Keyswitch the CPU to HALT prior to removing power.
2. Remove power from all rack assemblies in a system.
3. Disconnect communication cabling and remove module.
4. Set switches on replacement module.
5. Install module and attach communication cabling.
6. Reapply power to system.
7. Restart the system and verify operation.

5.6 LI/RI Communication Restart (Push Button)

Whenever communication is lost between the LI and an RI, an error code is generated and the Channel Error LED will be ON. Communication may be lost because of the following:

1. Loss of power at the Local CPU Rack.
2. A broken cable between the LI and RI.
3. Loss of power at a Remote Rack (DROP).
4. Hardware malfunction.

Reestablishment of LI/RI communications will always be attempted each time any of the following occurs:

1. Toggling the CPU keyswitch out of HALT.
2. Power cycling the power to the local CPU racks while the CPU is in RUN or DISABLE OUTPUTS.
3. Power cycling the remote drops while the Failure Override Bit is ON.
4. Pushing the LI restart push button while the Failure Override Bit is ON and the CPU is in RUN or DISABLE OUTPUTS.

The RESTART button is operational when all the following exists:

1. CPU must be running.
2. Communications error must have originated on one of the LI channels.
3. Failure Override Bit must be ON.
4. Valid communications must be able to be established to the affected racks, or else no change of state will occur.

NOTE: The RESTART button will only restart drops which are shutdown due to communications errors. It will have no effect if a local (CPU) rack error exists.

WARNING: Pressing the RESTART (RESET) button on the front of the LI module may cause outputs to turn ON or OFF.

LI/RI LED RESPONSES TO ERRORS

CPU STATUS		LI LIGHTS						RI LIGHTS								LI CHANNEL BITS		OPERATING CONDITION
		WITH A DROP FAILED			WITH ALL DROPS OPERATIONAL			FAILED DROP				OPERATION DROP						
RUN	HALT	CHANNEL RUN HALT	CHANNEL ERROR	MODULE ERROR	CHANNEL RUN HALT	CHANNEL ERROR	MODULE ERROR	RUN HALT	CHANNEL ERROR	I/O ERROR	MODULE ERROR	RUN HALT	CHANNEL ERROR	I/O ERROR	MODULE ERROR	FAILURE OVERRIDE BIT 13	FREEZE BIT 9	
R	0	–	–	0	R	0	0	R	0	0	0	R	0	0	0	–	–	Normal (CPU Run)
F	0	–	–	0	R	0	0	F	0	0	0	F	0	0	0	–	–	Disabled Outputs (CPU)
R	0	–	–	0	F	0	0	B	0	0	0	B	0	0	0	–	–	Control Register Halt Bit Set
0	F	R	I	I	R	0	0	H	0	0	X	H	0	0	0	0	0	Transmission Error
0	F	R	F	I	R	0	0	H	0	I	0	H	0	0	0	0	0	Bus or Read After Write Error
0	F	R	I	I	R	0	0	H	0	F	X	H	0	F	0	0	I	Transmission Error
0	F	R	F	I	R	0	0	H	0	I	0	R	0	F	0	0	I	Bus or Read After Write Error
R	0	R	I	0	R	0	0	H	0	0	X	R	0	0	0	I	0	Transmission Error
R	0	R	F	0	R	0	0	H	0	I	0	R	0	0	0	I	0	Bus or Read After Write Error
R	0	R	I	0	R	0	0	H	0	F	X	R	0	0	0	I	I	Transmission Error
R	0	R	F	0	R	0	0	H	0	I	0	R	0	0	0	I	I	Bus or Read After Write Error

0 = OFF
I = ON
– = NOT APPLICABLE
R = RUN
H = HALT
F = FLASHING (50% Duty Cycle)
B = BLINKING (Halt 95% ON, Run 5% ON)
X = EITHER ON or OFF (2)

NOTES: 1. Run light on LI signifies that LI is operational no matter what error conditions(s) exist within the RI or CPU.

2. The state of the remote channel error light is dependent on which device detected communication error first; On-remote and OFF-local.

Figure 5.3 - LI/RI LED Response to Errors

LI/RI FAULT STATUS

FAILURE OVERIDE BIT 13	FREEZE BIT 9	CPU STATUS AFTER FAULT	DROP FAULT								CHANNEL FAULT (Transmission Loss)								PROGRAM HALTED DROP See Notes			
			FAILED DROP				OPERATIONAL DROP				FAILED DROP				OPERATIONAL DROP				HALTED OPERATION DROP			
			LOCAL IMAGE		REMOTE DROP		LOCAL IMAGE		REMOTE DROP		LOCAL IMAGE		REMOTE DROP		LOCAL IMAGE		REMOTE DROP		LOCAL IMAGE		REMOTE DROP	
			INPUTS	OUTPUTS	INPUTS	OUTPUTS	INPUTS	OUTPUTS	INPUTS	OUTPUTS	INPUTS	OUTPUTS	INPUTS	OUTPUTS	INPUTS	OUTPUTS	INPUTS	OUTPUTS	INPUTS	OUTPUTS	INPUTS	OUTPUTS
0	0	HALT	CLEAR	CLEAR	—	TURN OFF	CLEAR	CLEAR	—	TURN OFF	CLEAR	CLEAR	—	TURN OFF	CLEAR	CLEAR	—	TURN OFF	UPDATE	CLEAR	—	TURN OFF
0	1	HALT	CLEAR	CLEAR	—	TURN OFF	LAST STATE	LAST STATE	—	LAST STATE	LAST STATE	LAST STATE	—	LAST STATE	LAST STATE	LAST STATE	—	LAST STATE	UPDATE	CLEAR	—	TURN OFF
1	0	RUN	CLEAR	CLEAR	—	TURN OFF	UPDATE LADDER	UPDATE LADDER	—	UPDATE LADDER	CLEAR	CLEAR	—	TURN OFF	UPDATE	UPDATE LADDER	—	UPDATE LADDER	UPDATE	CLEAR	—	TURN OFF
1	1	RUN	CLEAR	CLEAR	—	TURN OFF	UPDATE LADDER	UPDATE LADDER	—	UPDATE LADDER	LAST STATE	LAST STATE	—	LAST STATE	UPDATE	UPDATE LADDER	—	UPDATE LADDER	UPDATE	CLEAR	—	TURN OFF

NOTES:

1. LI HALT Bit refers to bits 1 to 8 of the LI channel control data register.
2. Regardless of how outputs on a drop get frozen, if communication is re-established, the drop will reset, clear all outputs and local image table information for that drop, and stay in the halted mode until restarted.
3. Restarting the system may be done in any of the following ways.

   A. Toggling the CPU keyswitch.
   B. Power cycling the local (CPU) rack.
   C. Auto Restart function of the LI/RI system.
   D. Pushing the LI Restart button.

   For more detailed information, refer to Section 5.6, LI/RI Communications Restart (Push Button).
4. If the CPU halts its execution due to an error, turning the keyswitch to HALT will not reset frozen outputs on any of the remote drops even if valid LI/RI communication is present.

Figure 5.4 - CPU and LI/RI Response to I/O Faults

5.6.1 FROZEN DROP RESET

An operational drop with frozen outputs may be reset by:

1. Power cycling the remote drop.
2. Setting the drop HALT bit ON while the Failure Override Bit is ON and CPU are operational. For more information on how to apply these bits, refer to Appendix D, LI Control/Status Registers.
3. Turning keyswitch to HALT providing the CPU rack is operational, no errors exist.

5.7 CPU and LI/RI Response to Faults

Figure 5.4 depicts how a system will respond to a detected fault condition within the LI/RI portion of the system.

5.8 Obtaining Additional Assistance

If additional assistance is needed, the following must be available.

1. A concise statement of the problem. Also, determine what the system is actually doing.
2. A physical description of the system indicating the quantities and types of the following:
   A. Inputs and outputs.
   B. Channels.
   C. Drops.
   D. Registers per drop.
   E. I/O per drop.
3. Is this a start-up of a new system or an addition or repair to a previously operable system?
4. How long has the system been operational?
5. Have any overriding control register bits been set?
6. What is the rack addressing as seen on the CRT screen?
7. Check contents of the following registers:
   A. CPU ERROR CODE
   B. LI ERROR CODE
   C. LI CHANNEL CONTROL/STATUS
8. Describe the equipment involved:

	Qty.	Serial Number	Class	Type	Series	Revision
Processor						
Local Interface(s)						
Remote Interface(s)						
Bus Expander(s)						
Rack Assembly(s)						
Register Module(s)						
Communication Module(s)						
CRT Programmer						
Loader/Recorder						
Other Equipment						

Figure 5.5 - Equipment List

APPENDIX A

A.0 LI/RI UPDATE TIME

A.1 General Information

This appendix provides equations for calculation of the LI/RI update time.

Update time refers to the time required to pass information in either direction between the LI image table and the RI image table.

Update time should not be confused with throughput time. Throughput time is the time required from the actuation of an input until an output action occurs. Throughput time also includes I/O module response time as well as CPU processing time. Further information regarding throughput (overall system response) is covered in the Planning and Installation Guide Instruction Bulletin, 30598-175.

A.2 Channel Update Time

Channel update time is dependent on the update time of the drop with the greatest number of registers assigned to it and the total number of registers on the channel. Therefore, by calculating the update time of that particular drop, the worst case channel update time may be determined.

A.3 Drop Update Time

One of two equations are used to calculate drop update time. For the purpose of these equations, drops will be put into two categories, digital and register. The digital drop is a pure digital drop (8 or less registers*) with no register modules. While the register drop will contain register modules or a combination of register and digital modules.

* For 9 or more registers, use register drop equations.

A.4 Update Time Equation Variables

D = Total digital drops on the channel. (0-8)
R = Total register drops (or digital/register drops) on the channel. (1-8)
DR = Total register addresses assigned to all digital drops. (0-64)
RR = Total register addresses assigned to all register drops. (1-255)
X = Register addresses assigned to the drop being evaluated. (1-8) If more than 8 registers are assigned, use X = 8.

Note that actual performance times may be better than calculations for channels with many registers.

A.5 Drop Update Time Equations

Use this equation for a channel with only digital drops.

Digital Channel Drop Update Time (ms)
$= 2.31D + DR + X + 0.79$

Use this equation for all other remote I/O channels.

Register Channel Drop Update Time (ms)
$= 2.31D + DR + 3.15R + 1.24(RR + X) + 1.52$

A.6 Example #1

This example works out the drop update time for a purely digital channel. This example has the following relevant attributes.

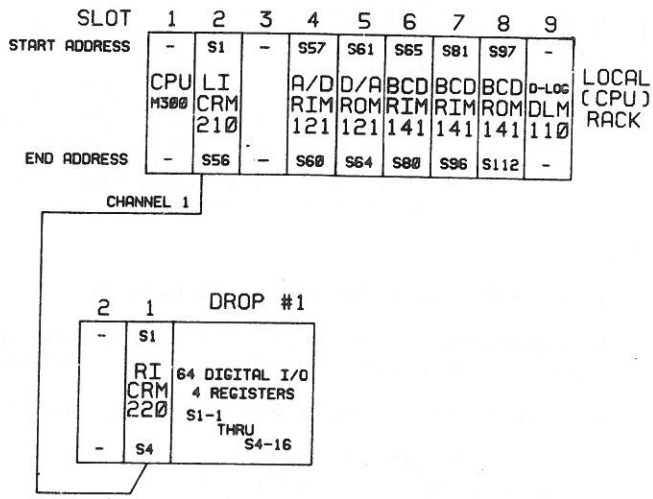

Figure A.1 - Digital Channel

CHANNEL 1 Consists of one drop and 4 registers.
DROP #1 Consists of 4 registers used for digital I/O.
CHANNEL 2 Not used.

Channel 1 Digital Drop Update Time
$= 2.31D + DR + X + 0.79$
$= 2.31(1) + (4) + (4) + 0.79$
$= 11.1$ ms

A.7 Example #2

This example works out the drop update time equation for a combinational (register) channel. This example was previously discussed in Section 4.3.4, LI/RI Addressing with Model 500 and has the following attributes:

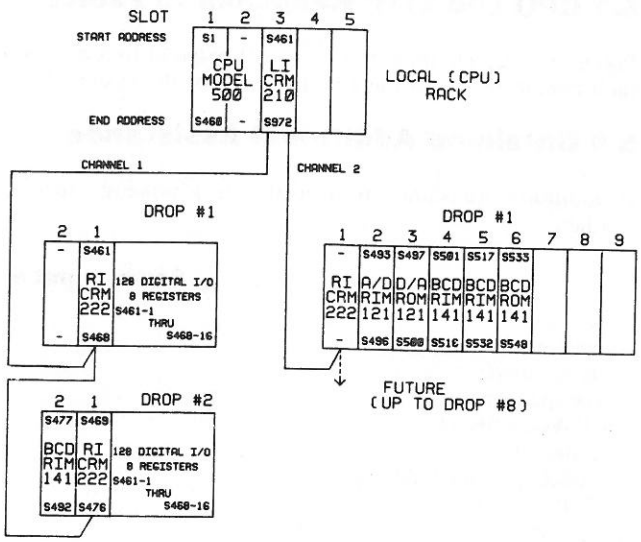

Figure A.2 - Register Channel

CHANNEL 1 Consists of two drops and 32 registers.

DROP #1 Consists of 8 registers used for digital I/O.
DROP #2 Consists of 24 registers, some used for data storage.
CHANNEL 2 Consists of one drop and 56 registers

DROP #1 Consists of 56 registers used for data storage.

Note that only the register drop update time equations can be used since neither channel has only digital drops.

Channel 1 Drop Update Time

$$
\begin{aligned}
&= 2.31D + DR + 3.15R + 1.24(RR + X) + 1.52 \\
&= 2.31(1) + (8) + 3.15(1) + 1.24(24 + 8) + 1.52 \\
&= 54.7\text{ms.}
\end{aligned}
$$

Channel 2 Drop Update Time

$$
\begin{aligned}
&= 2.31D + DR + 3.15R + 1.24(RR + X) + 1.52 \\
&= 2.31(0) + (0) + 3.15(1) + 1.24(56 + 8) + 1.52 \\
&= 84.0\text{ms.}
\end{aligned}
$$

A.8 Register Optimization

By allocating only the number of registers which will be used by a register module, channel update time can be minimized. For example, if only five of the 16 registers of a RIM 141 BCD Output Module are actually needed, assign only five. This register reduction of 16 to 5 will result in a 15ms channel update time savings.

APPENDIX B — ERROR CODES

B.1 Introduction And Description

B.1.1 GENERAL INFORMATION

Errors detected by the processor and error codes annunciated on the CRT provide the operator with information useful in isolating problems.

Some errors are indicated as messages on the screen display while other error indications involve error code numbers. Since the messages are self explanatory, this appendix deals directly with the numbered error codes.

These error code numbers can be broken into two general categories and are indicated in different locations on the CRT screen.

In the first category are the **peripheral to PC system** interaction errors of which 3 classifications of error codes exist. These errors are indicated at the bottom of the screen display or for some special cases, in the status register of a communications rung.

In the second category are the **PC system operational errors** which are errors detected within the processor or any one of the modules contained in a programmable controller system. These errors are indicated in the STATUS Mode display next to the label ERROR NUMBER. The number displayed is also the number contained in the error code control register 8175 or possibly in a Local Interface Module error code control register (when using remote I/O).

B.1.2 PERIPHERAL TO PC SYSTEM INTERACTION ERRORS

These types of errors are associated with attempts to perform illegal operations with the processor or the communication hardware is not functioning properly. This category of error will only be generated when using the keyboard to command processor operations or when the processor is attempting communication with other responding devices.

The three classifications of peripheral to PC system interaction error codes are: Processor, Transmission, and Tape. When an error occurs while a programmer is connected to the processor, one of these messages will be shown on the display along with a number. Should an error occur during the execution of a processor communication rung a Processor Error will be used to indicate the fault. The number code will be shown when the status register of the communication rung is displayed.

Processor Errors

These errors indicate that the operation attempted was not successfully completed. The error code numbers range from 01 thru 99. To resolve the error situation, check the error code description in the following table, use the CLEAR key to clear the error indication if the error has been displayed on a programmer, and take the appropriate recourse action. Error codes indicated by an asterisk (*) in the following Error Code Table, may also be displayed in the status register of a communications rung.

PROCESSOR ERROR CODE TABLE

Error Code No	Error Description
01*	Illegal protocol opcode, the device does not recognize the instruction. Reenter the desired operation.
02	Illegal intermediate code format. Reenter the desired operation.
03*	An illegal address has been attempted.
04	Illegal rack addressing has been attempted.
05*	An instruction has been attempted which is not allowed in the processor. (Example: Square root in Model 300 processor.)
06	Item being searched for, cannot be found.
07*	An attempt has been made to alter data in a protected register. Check Control Register 8176.
08	An attempt has been made to access protected memory. Check Control Register 8176.
09*	An attempt has been made to alter data in a READ only register or a register containing external inputs.
10	An attempt has been made to exceed memory limitations.
11*	Communications error (receiver overflow). Reenter the desired operation.
12	Illegal CPU rack addressing; Register assignments must be divisible by four.
13*	Communications error (link error). This error is generated by the processor. Check Control Register 8175 or the status register of the communication rung. Check cable connections between devices.
14	The operation that has been attempted is not allowed in RUN.
15*	Communication overflow. Check the baud rate for compatibility between communicating devices. Reenter the desired operation.
16	The register count in a communication rung is too large for the processor.
17*	The remote device is inactive. This error code is generated by the Network Interface Module. Check cable connections between devices.
18	The rung number used is not allowed.
19*	An illegal READ parameter has been assigned.
20	An illegal channel number, or no channel number has been assigned.
21*	Trying to change a forced bit or WRITE to an external output while the processor is in HALT.
22	The forcing function is inhibited from the processor COMM port.
23*	An attempt has been made to alter data in a fenced register.
24	An attempt has been made to force a nonforceable register.

25*	CPU error, check Control Register 8175. Refer to the following section on CPU/LI errors.
26	Rack Addressing and user memory overlap.
27*	Memory error. A CLEAR ALL operation is required.
28	An illegal baud rate was selected.
29*	An attempt has been made to send a message with an illegal route.
30	An attempt has been made to alter PROM memory after the PROM inhibit coil was entered in memory.
31*	See **Tape Errors**
32	Operation is not allowed in PROM memory (such as inserting, deleting, or replacing a rung).
33*	See **Tape Errors**
34	For UVPROM processors only: Read after Write error; parity error; or security jumper was removed and no UVPROM inhibit coil was programmed into memory.
35*	See **Tape Errors**
36	Replace rung operations are not allowed on this rung. Use delete and insert operations only.
37*	See **Tape Errors**
38	Unused
39*	Alarm already set within the D-LOG Module.
40	Unused
41*	An illegal register WRITE. The D-LOG module does not accept a register WRITE into certain registers.
42	Unused
43*	An illegal operation has been attempted. D-LOG Module protected.
44	Unused
45*	Operation is not allowed. D-LOG Module tape operation is in progress.
46	Unused
47*	Operation is not allowed due to keyswitch position.
48	Programming of an MCR in subroutine area is not allowed.
49	I/O, Register or Channel is safeguarded; used in Type SCP-544 RAM/PROM Processor — see Appendix E.
50	Rack Addressing is not alterable when forcing is active.
51*	A module is not seated properly or missing, or no rack address assigned to the module, or the address exceeds the capability of the processor.
52	Unused
53*	See **Tape Errors**
54	Illegal MARK number.
55	See **Tape Errors**
56	Unused
57	Unused

58	Unused
59	Unused
60	Illegal MARK number. GOTO or GOSUB with numbers above 8189 not allowed.
61	MARK ST. SUB rung cannot be inserted-append only allowed.
62	RTN (return) rungs are not allowed in ladder area.
63	MARK number previously used in the program. Each MARK instruction must have a unique number assigned.
64	Operation is not allowed while the processor is in RUN. Cannot delete a RTN if any GOSUB contains the same MARK number.
65	Operation is not allowed. Cannot delete MARK ST. SUB rung unless all subroutines are deleted.
66	Operation is not allowed — cannot delete MARK having an associated RTN (return).
67	Operation is not allowed — RTN rungs must have an associated MARK number.
68	Operation is not allowed — only one RTN per MARK number is allowed.
69	Operation is not allowed while the processor is in RUN — GOSUB cannot invoke a subroutine having no RTN.
70	Operation is not allowed while the processor is in RUN — GOTO rung cannot jump to a MARK having an associated RTN.
71	Operation is not allowed while the processor is in RUN — cannot delete MARK until all GOSUBs or GOTOs with the same number are deleted.
72	Operation is not allowed while the processor is in RUN — rung cannot have unused MARK number. A GOTO or GOSUB with an undefined MARK is not allowed. The MARK must be programmed before the GOTO or GOSUB is programmed.
73	Unused
74	Unused
75	Unused
76	Unused
77	Unused
78	Unused
79	Operation is not allowed when the processor is in RUN while the Timed Interrupt is enabled.

Tape Errors

These errors are generated when performing tape operations. When the processor is operating with a Loader/Recorder through the use of communications rungs, the status register of that rung can be checked for the presence of an error condition.

Error Code No.	Error Description
31*	The end of the tape was encountered before the operation could be completed.
33*	Tape Data Error detected, the block of data involved in the Read or Write operation was faulty.
35*	The tape cartridge is not seated properly or is missing, or the "Record" tab on the cartridge has been set to the Write Inhibit position.
37*	An attempt to Skip or Read a file was made when already past the last file on the tape.
53*	Illegal Tape Format — Erase Track Required.
55*	Tape operation has been aborted. Retry the operation.

Transmission Errors

Communication errors due to hardware problems are annunciated on the CRT screen by the message "Transmission Error" followed by a number.

The error code numbers that appear are the numbers 2, 6, 8, 9, 11 and 74. When an error such as this occurs, check all cable connections and use the CLEAR key to clear the error indication. When all connections are secure, retry the operation.

B.1.3 PC SYSTEM OPERATIONAL ERRORS

These error codes indicate PC system operational errors and consist of a five digit decimal value. These error codes or (ERROR NUMBERS) are the contents of the Control Register 8175 data field (bits 1-16). Seven possible classifications of operational error codes exist and they are:

ERROR NUMBER	TYPE OF ERROR
30000-32700	CPU/LI ERROR
29000-29999	MISCELLANEOUS ERROR
20000-28192	SLOT REGISTER ERROR
19000-19016	SLOT ERROR
10000-18192	READ AFTER WRITE ERROR
01000-09999	PROCESSOR COMMUNICATION PORT ERROR
00001-00999	GENERAL ERROR

When an error condition occurs, the appropriate error code is loaded into Control Register 8175 only if the register contains zero or if it presently contains an error code of lower priority (a smaller number). The previous error code is then lost.

The same operational errors are used by the Local/Remote Interface systems to indicate errors in devices under its control. In this case, Register 8175 or the ERROR NUMBER in the CRT Status display will indicate the slot of the Local Interface having the problem. Once located, inspection of the error control register inside the Local Interface will reveal which of the remote devices contains the error. Refer to Section B.2 for greater detail on using the error codes to isolate system faults.

CPU/LI Error (30000-32700)

This error indicates a problem with either the processor (CPU) or Local Interface Module.

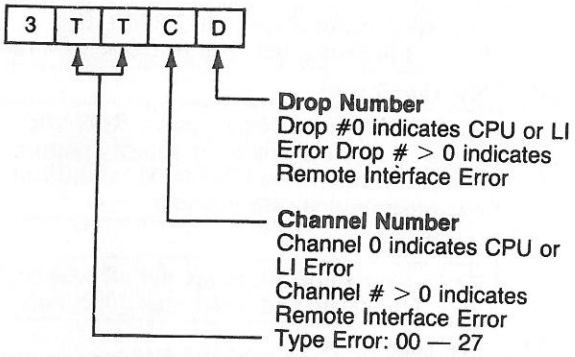

TT	ERROR DESCRIPTION
00	Status Register Read/Write Parity Error▲
01	Image RAM Read/Write-Parity Error▲
02	Internal Register Data Error
03	Illegal PROM Format
04	Illegal Opcode Encountered in RUN
05	Bus Error Signal Error
06	Software Watchdog Error
07	Not Used
08	Not Used
09	User Memory Read/Write-Parity Error●
10	Illegal Data in User Memory●
11	PROM Memory Corrupted
12	Illegal Addressing Map Code
13	Transmission Error Exceeds Tolerance
14	Loss of Transmission
15	More External I/O Registers Assigned Than Module Can Handle
16	Too Many Registers Assigned to the Drop
17	Addressing More than 8 Drops per Channel
18	Addressing Number of Channels Exceeded Module Capabilities
19	Addressing Map Checksum Error
20	Bus Error — Watchdog Time Out
21	BPU Diagnostic Error
22	Parity Circuit non-functional
23	Clear Line Error
24	Executive Scratch RAM Error
25	Watchdog Tolerance Error
26	Hardware Diagnostic Error
27	Module Inactive

●Control registers 8183 (most significant) and 8184 (least significant) will contain the memory word address in error.
▲If S8175=30000 or 30100, the status field will contain the bit error mask and S8184 will contain the address of the failing register.

Miscellaneous Errors (29000-29999)

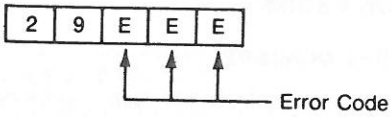

EEE	Error Description
000	Subroutine Nesting Error●
100	Time to Process the Timed Interrupt Subroutine has Exceeded the Time Base.●
101	Timed Interrupt Routine Missing
102	Time to Solve a Rung has Exceeded the Tolerance Set Within a Timed Interrupt.●
500	Number of Assigned Local Interface Registers must be at least 8 for 1 defined channel, and 12 for 2 defined channels.
501	Insufficient Local Interface Control Registers

●Control register 8164 will contain the rung number where the error took place.

Slot Register Error (20000-28192)

In the event of a Slot Register Error, the ERROR NUMBER (last four digits) will point out the first register number assigned to the slot containing a faulty register module. Further inspection of that register's status field will provide additional diagnostics.

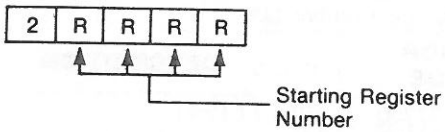

Slot Error (19000-19016)

In the event of a Slot Error, the ERROR NUMBER will point out the slot number experiencing the error.

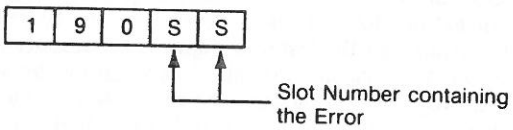

Register Read After Write Error (10000-18192)

A read after write error indicates a particular bit in a register has not maintained the condition written to it by the processor. The error number (last four digits) will point out which register encountered the problem.

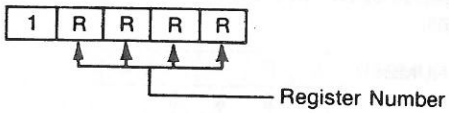

By displaying the status field (bits 17-32) of the control register containing the error code, the bit or bits causing the malfunction will be indicated (by a 1). Since each register contains both a status field and a data field, control register 8184 is used to indicate which set of bits contains the problem.

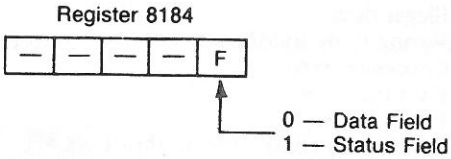

If the faulty register is used to control outputs and control register 8184 indicates the bad bits are contained in the data field, most likely, an output module has caused the problem. Following is a diagram which can be used to isolate the output module having the problem.

In addition, note that a parity error can also be detected in a register and is indicated by a zero in all bit positions.

Status Field of Control Register 8175 or of Local Interface Error Code Control Register

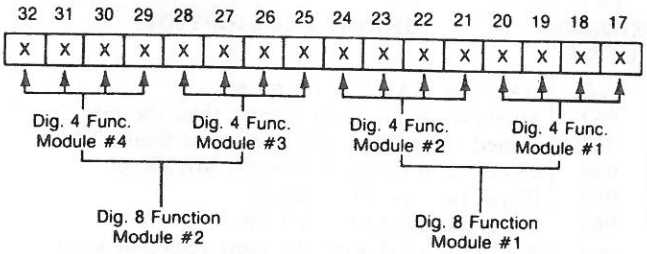

Checks:

a. If X=0, Bit was read correctly.

b. If X=1, Bit was read incorrectly.

c. If all X's=0, Parity error was detected.

Processor Communication Port Error (01000-09999)

To clear a communication port error, toggle the processor keyswitch from HALT to RUN, or Clear S8175. If this does not clear the error, cycle power to the processor. These errors can be seen in the STATUS Mode Display by the ERROR NUMBER. Also check remote device and cable connections.

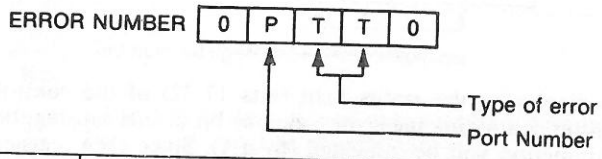

TT	ERROR DESCRIPTION
11	Communications overflow.
12	Buffer overflow.
13	Illegal data.
14	Wrong reply (odd/even).
15	Checksum error.
16	Framing error.
17	Parity error.
18	Inability to communicate thru Port #P.
19	Retry timeout.

General Errors (00001-00999)

The ERROR NUMBER in the Status Display indicates the problem.

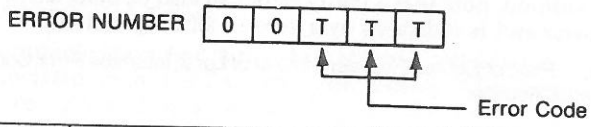

TTT ERROR CODE	ERROR DESCRIPTION
960	HALT or HALT/RUN bit set.
962	Tolerance equal to or greater than the rate.
963	Timed Interrupt time base is less than 3.
964	GOTO and GOSUB to same MARK.▲
965	Illegal Internal Error Code.
966	User Subroutine Stack Error.▲
967	A MARK rung with the same reference number is required.▲
968	GOTO to MARK with RTN (return).▲
969	GOSUB to MARK with no RTN (return).▲
970	Scan Time of processor is greater than 1 second or scan limit in S8167 has been exceeded.●
979	Rack Addressing missing.
980	Keyswitch in RUN and no program in memory.
981	PROM inhibit coil not in memory (PROM processor).
983	Safeguarding rung not in memory.
984	Undefined register programmed in user memory.●

●S8184 will contain the rung number being executed when the error occurs.
▲S8184 will contain the MARK number.

B.2 Using Error Codes To Isolate P.C. System Faults

B.2.1 GENERAL CONCEPT

When a P.C. system, which was once operating correctly malfunctions, one of three situations can arise: either the whole P.C. system shuts down, one or more drops shut down, or a run time communication port error is detected. Once the malfunction is identified as existing in one of these three categories, the P.C. SYSTEM OPERATIONAL ERROR CODES can be used to isolate the fault. Recognition of the first category is obvious however, the second category can exist only when the P.C. system incorporates remote I/O and the override bit is set in the Local Interface Module.

The third category of malfunction deals with communications to external devices and requires that control register 8175 be monitored by the program for errors in the range 01000 to 09999. These types of errors are different from those described in the "Processor Errors" section in that they are generated by the processor itself and not by the external device.

B.2.2 WHEN THE SYSTEM SHUTS DOWN

When the processor halts, register 8175 should be the first point of interrogation. The error code indicated will be one in the following number ranges:

ERROR CODE	DESCRIPTION
30000-32700	CPU/LI Error
29000-29999	Miscellaneous Error
20000-28192	Slot Register Error
10000-18192	Read After Write Error
00001-00999	General Errors

In the case of the 20000-28192 Slot Register Errors two courses of action may be taken depending on the register number indicated by the last four digits. If the register is the first assigned to a register module, interrogating the status field of that register will indicate the error. (Refer to appropriate register module Instruction Bulletin.) If the register number is the first assigned to a Local Interface Module (when using remote I/O), then further interrogation of the LI error code register is required. (Refer to Appendix D to determine the address of the LI error code register/s.) When the LI error code register is interrogated, the number will be in the following ranges:

LI ERROR CODE	DESCRIPTION
30000-32728	CPU/LI Error
20000-28192	Slot Register Error
10000-18192	Read After Write Error

In the case of the 10000-18192 Read After Write Errors, the affected bit or bits are indicated in the status field of the **LI error code control register.**

Following is a flow chart which illustrates the previously described procedure.

P.C. SYSTEM SHUTS DOWN

STEP 1: INTERROGATE S8175

IF 30000-32700; Refer to "CPU/LI Error"

IF 29000-29999; Refer to "Miscellaneous Error"

IF 20000-28192; Refer to STEP 2, following

IF 10000-18192; Look at status field of S8175 for an indication of the affected bits and refer to "Read After Write Error"

IF 0001-0099; Refer to "General Error" and interrogate control register S8184 when indicated

STEP 2: USING THE REGISTER NUMBER INDICATED BY THE LAST FOUR DIGITS DETERMINE THE SLOT TO WHICH THE REGISTER IS ASSIGNED

IF assigned to a register module; Look at status field of the register number indicated by the error code then refer to appropriate register module Instruction Bulletin for the meaning of the error number

IF assigned to a local interface; Interrogate the LI error code register then refer to STEP 3

STEP 3: INTERROGATE THE LI ERROR CODE REGISTER

IF 30000-32728; Refer to "CPU/LI Error"

IF 20000-28192; Using the register number from error code (last four digits), determine slot to which register is assigned. The register module in that slot, generated the error. Look at status field of that register then refer to appropriate register module Instruction Bulletin for the meaning of the error number.

IF 10000-18192; Look at status field of LI error code register for an indication of the affected bits and refer to "Read After Write Error"

EXAMPLES:

Shown is an arbitrary P.C. system configuration with four different fictitious malfunctions (which are not the only ones possible) marked by numbers. Following are the steps one would go through to isolate each type of problem (based on the previous flow chart). The four problem areas are the:

— CPU
— Local Register Module
— Remote Register Module
— Remote I/O Module

FOUR P.C. SYSTEM MALFUNCTIONS

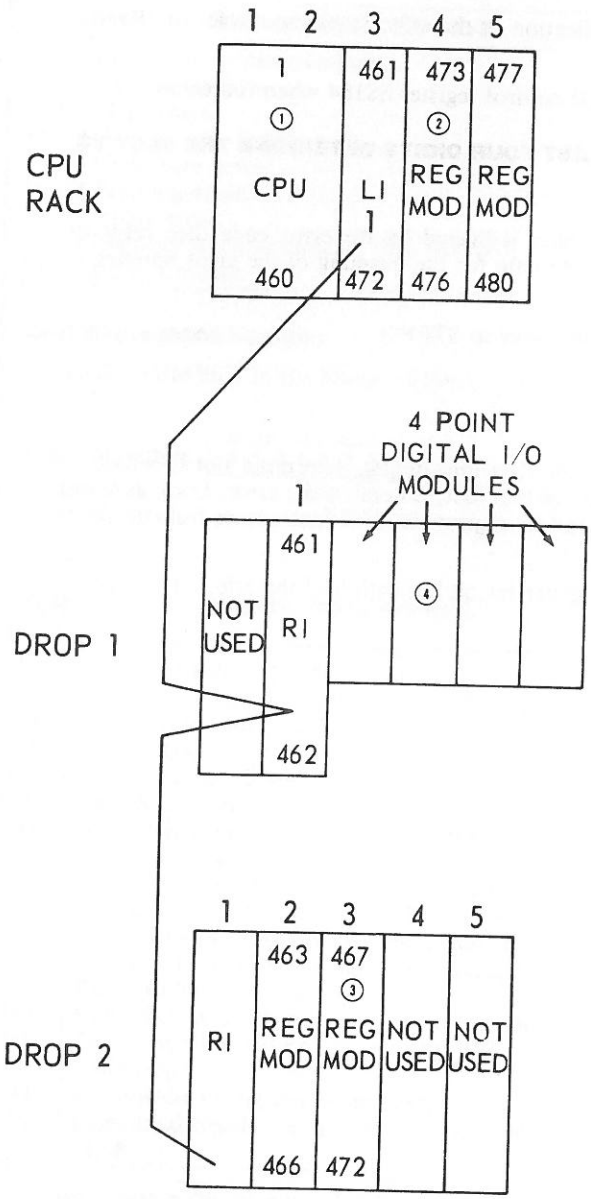

Figure B.1 — A Typical P.C. System

*NOTE: Arbitrary register assignments have been added to this diagram to aid in the following explanation.

1. Malfunction in CPU

A malfunction in the CPU would cause the system to shut down therefore the "P.C. System Shuts Down" flow chart should be used.

Result of STEP 1: Since a malfunction in the CPU itself, caused the system to shut, interrogating control register 8175 would result in an error code in the range of 30000-32700. By referring to the "CPU/LI Error" section the specific error can be determined.

2. Malfunction in a Local Register Module (Located in CPU Rack)

A major malfunction in a register module located in the CPU rack would cause the system to shut down, therefore the "P.C. System Shuts Down" flow chart should be used.

Result of STEP 1: Interrogating control register 8175 would result in a 20473 error code.

Result of STEP 2: The error code indicates the register module in slot four of the CPU rack has malfunctioned since it is the module containing register 473 as the first register address. By looking at the status field of register 473 and then referring to the appropriate register module Instruction Bulletin, the specific error can be determined.

3. Malfunction in a Remote Register Module

A malfunction in a register module located in a remote rack will cause the total system to shut down if the override bit in the local interface module (LI) is **not** set. If this is the case, the "P.C. System Shuts Down" flow chart should be used.

Result of STEP 1: Interrogating control register 8175 would result in a 20461 error code.

Result of STEP 2: The register number indicated in the error code is 461, which is the first register in the LI. Interrogating the LI error code register (in this case 8163) will provide additional information as to which module in the remote I/O system caused the shut down.

Result of STEP 3: Interrogating the LI error code register (8163 in this case) would result in a 20467. Since the register module in DROP two SLOT three contains register 467, that module is responsible for the system shut down. By looking at the status field of register 467 and then referring to the appropriate register module Instruction Bulletin, the specific error can be determined.

4. Malfunction in a Remote I/O Module

A malfunction in an output module located in a remote rack will cause the total system to shut down if the override bit in the local interface module (LI) is **not** set. If this is the case, the "P.C. System Shuts Down" flow chart should be used.

Result of STEP 1: Interrogating control register 8175 would result in a 20461 error code.

Result of STEP 2: The register number indicated in the error code is 461, which is the first register in the LI. Interrogating the LI error code register (in this case 8163) will provide additional information as to which module in the remote I/O system caused the shut down.

Result of STEP 3: Interrogating the LI error code register (8163 in this case) would result in a 10461. Looking at the status field of 8163 will provide the bit mask, indicating which output module associated with register 461 caused the failure.

B.2.3 WHEN A REMOTE RACK SHUTS DOWN

When the P.C. system incorporates remote I/O and a remote rack or racks halts without causing the rest of the system to halt, the error code register of the Local Interface module controlling that drop will contain the error number of the fault. When the LI error code register is interrogated, the number will be in the following ranges:

LI ERROR CODE	DESCRIPTION
30011-32728	CPU/LI Error
20000-28192	Slot Register Error
10000-18192	Read After Write Error

In the case of the 10000-18192 Read After Write Errors, the affected bits are indicated in the LI error code register.

Following is a flow chart which illustrates the previously described procedure.

EXAMPLES:

Using the malfunctions three and four in Figure B.1 as examples, following are the steps one would go through to isolate each type of problem (based on the previous flow chart). The two problem areas are the:

— Remote Register Module
— Remote I/O Module

1. Malfunction in a Remote Register Module

A malfunction in a register module located in a remote rack will cause just that rack (drop) to shut down only if the override bit in the local interface module (LI) is set. If this is the case, the "Remote Rack/s Shuts Down" flow chart should be used.

Result of STEP 1: Interrogating the LI error code register (8163 in this case) would result in a 20467. Since the register module in DROP two slot three contains register 467, that module is responsible for the system shut down. By looking at the status field of register 467 and then referring to the appropriate register module Instruction Bulletin, the specific error can be determined.

2. Malfunction in a Remote I/O Module

A malfunction in an output module located in a remote rack will cause just the rack (drop) to shut down only if the failure override bit in the interface module (LI) is set. If this is the case, the "Remote Rack/s Shuts Down" flow chart should be used.

Result of STEP 1: Interrogating the LI error code register (8163 in this case) would result in a 10461. Looking at the status field of 8163 will provide the bit mask indicating which output module associated with register 461 caused the failure.

B.2.4 PROCESSOR COMMUNICATION PORT ERROR DETECTED

These errors are different from those Processor Errors associated with communications listed earlier in this appendix. The difference is that Processor Communication Port Errors are detected by the processor rather than the external communicating device. The only Processor Error that has any relationship to Processor Communication Port Errors (01000-09999) is Processor Error code 13. When error 13 is indicated in a status register of a communication rung, interrogation of control register 8175 will result in the display of one of the Processor Communication Port Errors (01000-09999).

These errors can also be detected when an external device is asking for information from the local processor. In this case, there is no communication rung status register to indicate the fault. Therefore, it is up to the user to implement the means to annunciate these types of errors.

REMOTE RACK(S) SHUTS DOWN

↓

STEP 1: INTERROGATE APPROPRIATE LOCAL INTERFACE ERROR CODE REGISTER

IF 30000-32728; Refer to "CPU/LI Error"

IF 20000-28192; Using the register number from error code (last four digits), determine slot to which register is assigned. The register module in that slot, generated the error. Look at status field of that register then refer to appropriate register module Instruction Bulletin for the meaning of the error number.

IF 10000-18192; Look at status field of LI error code register for an indication of the affected bits and refer to "Read After Write Error"

APPENDIX C

C.0 CHANNEL EXPANSION

C.1 General Information

This appendix provides information to expand an LI/RI system. Expansion may be accomplished in two ways. The first consists of adding to an existing drop, while the second is to add an additional drop.

Regardless of what type of expansion method is used, the user must develop and enter the ladder logic program for the newly added I/O points. For the specific programming procedures, refer to the CRT Programmer Instruction Bulletin.

C.2 I/O Expansion Considerations

1. The additional I/O must fit within the processor (CPU) addressing capability.

2. The additional I/O must be able to be supported by the existing LI, if not, an additional LI module(s) will be required.

   Note: Model 300 can support 1 LI only.

3. Expansion of a physical drop requires that external registers are available for use at that location by either a result of:

   A. Previously allocated address assignments.

   B. A reallocation of addresses.

4. The addition of more registers on a channel will increase the LI/RI update time. However, if the register(s) were previously on that channel, the LI/RI update time should not be significantly increased by additional drops.

The following is a brief description of the two basic expansion alternatives, drop expansion and drop addition.

C.3 Drop Expansion

Drop expansion by a mere addition of hardware alone can be accomplished if, and only if, the previously entered rack addressing allows for it. Therefore, the current system configuration and the defined rack addressing has to be reviewed when contemplating expansion an existing PC system.

Expansion can be accomplished in one of two ways:

1. Replace the existing rack with a larger assembly.

2. With a four function digital I/O rack assembly, an expander module (class 8030 Type CRM-115/116) may be used to add a second Digital I/O rack to the drop.

C.4 Drop Addition

Adding a drop can be performed at any time within the limitations of the CPU and LI(s) being used.

The mere addition of the hardware to support a drop to an existing LI channel alone will not make a drop operational.

Alteration of the existing rack addressing assignments and associated ladder program most likely will be required.

WARNING: Care must be taken when altering existing rack addressing. Automatic shifting of addresses will occur from the point of alteration. Registers may be changed to locations which were not intended by the designer to be used as I/O points, thus possibly causing unexpected control action to occur.

Once hardware and software modifications are started, complete and verify that they are correct before putting the system into Run or Disable Outputs.

For information on how to alter rack addressing assignments, refer to the CRT Programmer Instruction Bulletin.

When adding a drop or changing rack addressing for a specific channel, the LI/RI update time may be altered. Refer to Appendix A, LI/RI Update Time for more detailed information.

APPENDIX D

D.0 LI CONTROL/STATUS REGISTERS

D.1 General Information

Control registers 8001 through 8163 (contained in the processor) are used to monitor, and in some cases, control the Local/Remote Interface (LI) system. Not only is the condition of the LI system reflected in these control registers, but information pertaining to register modules and I/O modules is also located in these registers.

The CRM-210 and CRM-211 are two channel LI modules in which three registers are used to communicate directly with the processor (CPU). The first register is an error code control register. The second is a control register for channel 1 and the third is a control register for channel 2.

The number of control registers used to monitor a particular LI system is based on the number of local interfaces used in the system and the number of channels included in each local interface. Each register consists of two parts known as the status field and data field. The data field can be programmed by the user for control functions. The status field, as the name implies, is used just to monitor status of specific system conditions.

D.2 Register Allocation

For the first LI Module in a system, the error code control register is S8163. The channel control registers are S8162 for channel 1 and S8161 for channel 2.

The following is a listing of the error control and channel registers for systems using both channels on each LI up to 7 LI modules.

The contents of the error code control registers are discussed in greater detail in Appendix B, Error Codes. The format for the control data and status follow.

REGISTER	L.I.	LOCATION	FUNCTION
S8163	First	(Right of CPU)	Error Code
S8162	First		Channel 1 Control Data and Status
S8161	First*		Channel 2 Control Data and Status
S8160	Second*	(Right of first LI module)	Error Code
S8159	Second*		Channel 1 Control Data and Status
S8158	Second*		Channel 2 Control Data and Status
S8157	Third*	(Right of second LI module)	Error Code
S8156	Third*		Channel 1 Control Data and Status
S8155	Third*		Channel 2 Control Data and Status
S8154	Fourth*	(Right of third LI module)	Error Code
S8153	Fourth*		Channel 1 Control Data and Status
S8152	Fourth*		Channel 2 Control Data and Status
S8151	Fifth*	(Right of fourth LI module)	Error Code
S8150	Fifth*		Channel 1 Control Data and Status
S8149	Fifth*		Channel 2 Control Data and Status
S8148	Sixth*	(Right of fifth LI module)	Error Code
S8147	Sixth*		Channel 1 Control Data and Status
S8146	Sixth*		Channel 2 Control Data and Status
S8145	Seventh*	(Right of sixth LI module)	Error Code
S8144	Seventh*		Channel 1 Control Data and Status
S8143	Seventh*		Channel 2 Control Data and Status

* Indicated LI register assignments may vary, dependent upon LI position and rack addressing assignments. Control registers are dynamically assigned in accordance with rack addressing and not solely based upon LI count. For more information, refer to Section 4.3.3, LI Control Register Allocation.

Figure D.1 - LI Control/Status Register Assignments

D.3 Local Interface Module Control Data Register

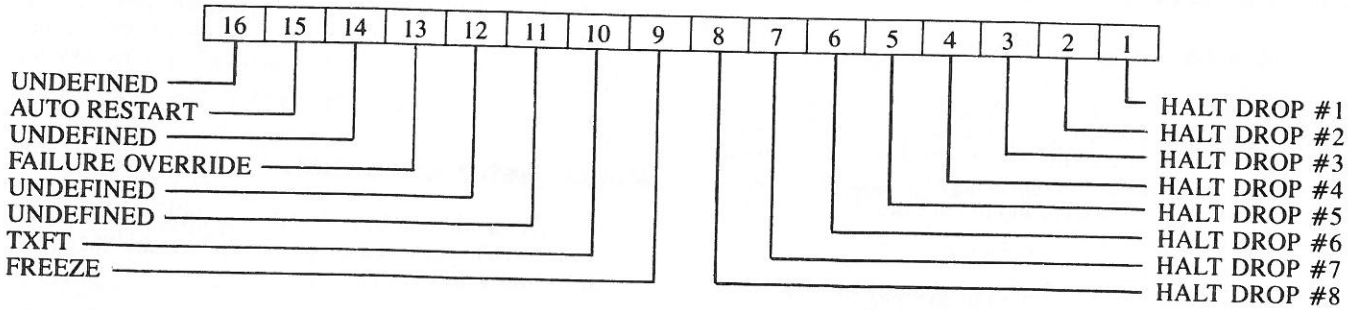

Channel Control Register Bit	Name	Description
1 2 3 4 5 6 7 8	HALT DROP #1 HALT DROP #2 HALT DROP #3 HALT DROP #4 HALT DROP #5 HALT DROP #6 HALT DROP #7 HALT DROP #8	When OFF (0) the drop will operate as the ladder logic indictates. When ON (1) the drop will be shutdown. 1. Input status still valid 2. Outputs turn OFF 3. Register I/O clear (depending upon module type)
9	FREEZE	When ON (1) and a loss of transmission or transmission error or local rack error occurs, all outputs are maintained in their last state.
10	TXFT	Transmission Fault Tolerance determines whether 3 or 20 consecutive transmission errors occur before a channel error is acknowledged. OFF(0) = 3 errors ON(1) = 20 errors
11	Undefined	
12	Undefined	
13	FAILURE OVERRIDE	When ON (1) allows the channel to continue operating if a drop error on the channel occurs. When OFF (0) and drop error is present, channel will shutdown and processor will halt.
14	Undefined	
15	AUTO RESTART	When ON (1) allows the channel to attempt to re-establish valid communications with any drop shutdown due to transmission errors. (Bit 13 must be set to enable bit 15 to be recognized.) This control bit accomplishes a similar function as the restart button on the LI module.
16	Undefined	

Figure D.2 - LI Control Data Register

D.4 Local Interface Module Control Status Register (Read Only)

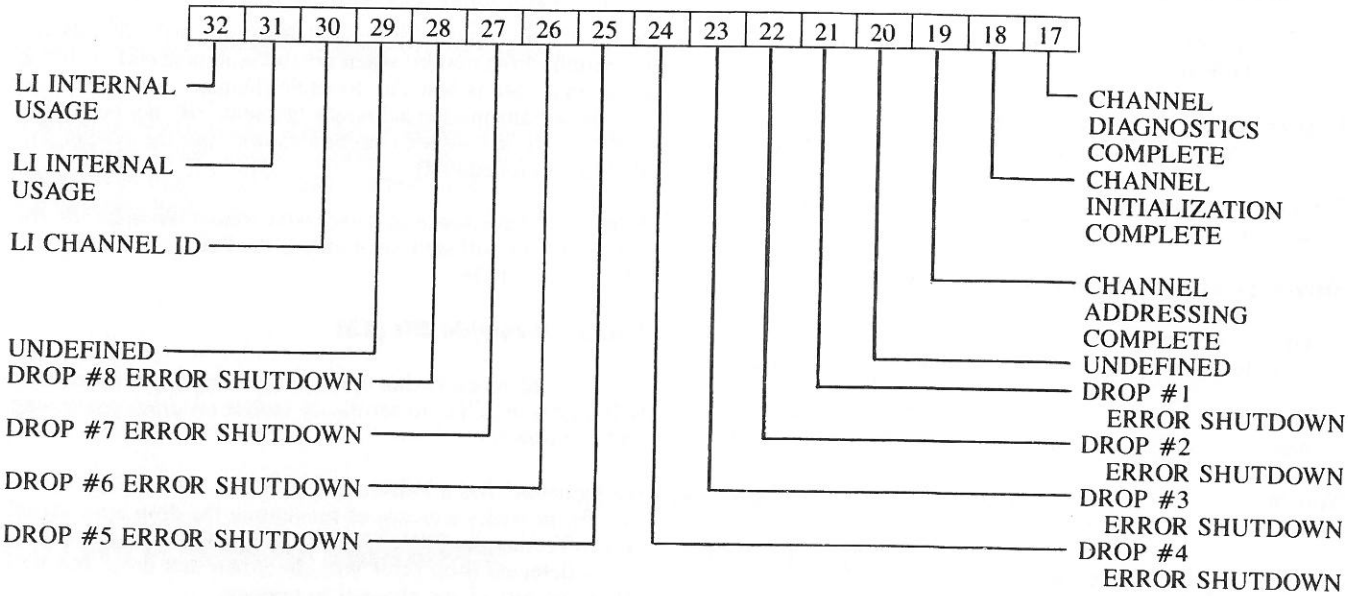

Channel Control Register Bit	Name	Description
17	Channel Diagnostics Complete	When ON (1) LI channel completed its diagnostics.
18	Channel Initialization Complete	When ON (1) 1. RIs have completed their diagnostics 2. Valid LI/RI communication 3. Image table updating sequence complete
19	Channel Addressing Complete	When ON (1), indicates the CPU has loaded valid rack addressing information into the LI.
20	Undefined	
21 22 23 24 25 26 27 28	DROP #1 ERROR SHUTDOWN DROP #2 ERROR SHUTDOWN DROP #3 ERROR SHUTDOWN DROP #4 ERROR SHUTDOWN DROP #5 ERROR SHUTDOWN DROP #6 ERROR SHUTDOWN DROP #7 ERROR SHUTDOWN DROP #8 ERROR SHUTDOWN	If drop has been rack addressed: When OFF (0) drop is operating When ON (1) drop is shutdown due to error. If drop has NOT been rack addressed: When OFF (0) no drop exists When ON (1) drop exists without addressing
29	Undefined	
30	LI Channel ID	When OFF (0), indicates a 1 channel LI.
31	LI Internal Usage	
32	LI Internal Usage	

Figure D.3 - LI Control Status Register

D.5 Detailed Description of Control Data/Status Bits

The LI channel control register, bits 1-16, are initially reset OFF (0) when the LI is installed. Once altered by programming equipment, data entry, or by the ladder program, these bits will retain their state until altered again.

Halt Bit(s) (1-8)

Any drop on a channel may be programmed to halt, that is, to turn OFF all of its associated outputs. This is done by setting its LI channel DROP HALT bit ON (1).

A drop programmed to halt will have valid updated input status contained within the LI image table.

Freeze Bit (9)

When the FREEZE BIT (bit 9) is set ON (1) by the user, all the outputs on all the drops of a particular channel will retain their last state, ON or OFF when any of the following exist:

1. A communication error at a drop (ie. cut cable)

2. The CPU HALT BIT (S8176-3) is set ON (1).(ie. CPU error or programmed Halt)

3. Power loss at the local (CPU) rack.

Note: Although the freeze bit may be set on (1), the operation of the freeze function depends upon the detected error.

In the following cases, the drops will not be frozen, but set OFF (0).

1. Drop with internal error (ie. power loss, faulty RI, read after write error) will have its outputs reset OFF (0).

2. CPU turned into HALT via keyswitch or S8176-1 will cause all drops to reset OFF (0).

Turning Off Frozen Drops

1. Power cycling a drop with frozen outputs will reset, turn OFF all the outputs, regardless of the processor state.

2. When valid communications exist, setting a particular LI halt bit ON (1) will result in turning off frozen outputs.

Note that if the CPU is halted due to an error, turning the key switch to halt *will not reset* frozen drops.

Restarting Frozen Drops

1. Placing the CPU in either Run or Disable Outputs, by either turning the CPU keyswitch or setting the appropriate control register bits (S8176), will allow all drops with valid communications to restart in accordance with the user program.

2. Power cycling the CPU when it is in either Run or Disable Outputs.

3. To automatically restart all drops, the CPU must be running. Also, the Failure Override Bit (bit 13) and the Auto Restart Bit (bit 15) must be previously set ON (1). This will function provided valid communications exist between the operational CPU and drop(s).

4. Pushing the RESTART (RESET) button on the LI, if and only if, the CPU and communications are fully operational. (Failure Override must be set ON (1).

Transmission Fault Tolerance Bit (10)

In harsh electromagnetically noisy environments, the possibility of nuisance system shutdowns could occur. If communications are disrupted, the LI/RI system is designed to establish a valid data transmission 3 times before acknowledging these errors to the processor.

Transmission Error Detection

Two types of data transmission error detection methods are used in the LI/RI communications link.

The first detection method counts the number of times a specific block of data is determined to be invalid. The second detection method counts the number of consecutive blocks of data which are determined to be invalid.

The accumulative values for each type of transmission error on each of the independent channels is kept internally by the LI and RI module. When any one good transmission occurs on a channel, the respective transmission error counters for that channel are reset to zero.

The user has the option of increasing the transmission fault tolerance level from 3 to 20 transmission errors. This is done by setting the Transmission Fault Tolerance Bit ON (1). Be aware that by setting the number of transmission errors to 20 will require additional time for the system to recognize a transmission error and cause a shutdown.

Note that the transmission fault tolerance only affects the operation of the system when invalid data is detected. In the event that data is lost due to cable damage, hardware malfunctions transmission acknowledgements will not be present in the LI/RI full duplex communication link, the system will shutdown immediately.

When the LI acknowledges excessive transmission errors, the entire system will shutdown unless the Failure Override Bit, (Bit 13) is set ON (1).

Failure Override Bit (13)

The LI is designed so that upon recognizing any drop error, it will signal the CPU to terminate ladder program processing and shutdown.

Each channel has a Failure Override Bit. The Failure Override Bit provides a means of preventing the drop error signal from affecting the CPU. With the Failure Override Bit set ON (1), a detected drop error will shutdown that drop, but will allow the rest of the channel to operate.

CAUTION: 1. Care must be taken whenever the Failure Override Bit is set ON (1), because the system will continue to operate when drop errors occur. However, it is still possible to halt drops thru ladder programming by setting ON (1) selected Drop Halt Bits.

2. If Failure Override Bit has been set ON (1) and a drop error shutdown occurs, followed by the Failure Override Bit being turned OFF (0), the channel will shutdown. The channel shutdown will in turn cause the system to shutdown.

This bit allows for more system flexibility, therefore improving troubleshooting and start-up capabilities.

Auto Restart Bit (15)

If a drop has been shutdown due to transmission error, setting bit 15 ON (1) will allow the LI to automatically attempt to re-establish valid communication to that drop. It should be noted, however, that the processor must be operating in Run or Disable Outputs. In order to keep the processor running under error conditions, the Failure Override Bit (Bit 13) must be ON (1).

This bit acts in the same manner as does the RESTART (RESET) button on the front of the respective LI module. The AUTO RESTART BIT has the advantage of attempting to bring a drop back on line as soon as possible without requiring personnel to push the LI RESTART button. For more information on the RESTART button, refer to Section 5.6 LI/RI Communication Restart (Pushbutton).

Drop Error Shutdown Bit(s) (21-28)

Drop Error Shutdown bits are used for diagnostic purposes. They are also used to initiate control functions when the Failure Override Bit is set ON (1).

The Drop Error Shutdown bit of a non-existent or an undefined drop will be displayed as ON (1)*, because the LI is not communicating with the drop. The drop error bit of an unde-

fined drop being ON (1)* will not affect the shutdown operation of the system.

Note that these bits will be extremely useful when implementing applications which use ladder control programs to affect conditional failure overriding and programmed shutdowns.

* Some programmers are capable of displaying information which is relevant only to the present system configuration. For additional information, refer to a programming instruction bulletin.

APPENDIX E

E.0 LI/RI POWER-UP SEQUENCE

E.1 General Information

This appendix will describe the power-up sequence for the LI/RI I/O system.

E.2 LI Light Sequence

The following sequence of events occurs when the LI is energized, or the processor keyswitch goes from HALT to RUN or DISABLE OUTPUTS:

1. The MODULE ERROR LED blinks ON, OFF, ON, OFF, and remains OFF if no detected error* exists within the LI.

2. The CHANNEL ERROR and HALT LED's are ON and turn OFF when all the self-diagnostic routines are completed.

3. The green channel RUN LED will turn ON when the LI is communicating.

*The MODULE ERROR LED will turn ON if this module has initiated a rack error condition, thus halting the system when:

1. A self-diagnostic error is detected.

2. Missing defined racks (unless the Failure Override Bit is ON (1)).

3. An illegal rack addressing map is detected.

E.3 RI Light Sequence

The following sequence of events occurs when the RI is energized:

1. All red LED's turn ON and then OFF.

2. The red HALT LED will turn OFF when the green RUN LED turns ON.

3. The green RUN LED turns ON when the RI is communicating to its rack assembly and the CPU is in Run or Disabled Outputs.

When the processor keyswitch goes from HALT to RUN or DISABLE OUTPUTS, only steps 2 and 3 occur.

The MODULE ERROR LED will remain ON only when a self-diagnostic error is detected.

E.4 LI/RI Initialization

1. When power is applied, self-diagnostic routines are initiated and verified within the LI, RI, CPU, and other register modules. Completion of the self-diagnostics insures that these modules are operational.

2. The LI then verifies communications with all of its drops.

3. The CPU will initiate the loading of the user defined rack addressing map into the LI.

If valid LI/RI communications cannot be established, an error will be generated by the LI module. This error will halt the processor unless the failure override bit of that LI channel control register has been set ON (1).

APPENDIX F

F.0 LI/RI ADDRESSING WITH MODEL 300

F.1 General Information

The following two examples are used to illustrate the concept of the Model 300 local and remote address assignments. The first utilizes a Model 300 housed in a digital I/O rack. The second has the Model 300 in a register rack. In both examples, there are 256 digital I/O and 6 register modules.

When examining these Model 300 examples, observe the following points:

1. Since the Model 300 can support only one LI and address a maximum of 112 registers, adding an LI *does not* increase the number of useable registers, but does permit the use of remote I/O.

2. Assign as many registers as possible to the LI. This type of register assignment allows for flexible remote I/O configurations.

3. The register assignments are distributed in an equitable manner between the two channels of the LI. This method allows for a uniform LI/RI update time.

4. The digital I/O are assigned to the first 16 registers because these are the forcible registers within the Model 300's 112 useable registers.

F.2 Local (Model 300 CPU) Digital Rack Assignments

This first example demonstrates the use of a Model 300 being housed in a digital rack to support local I/O while also supporting remote I/O. The local (CPU) rack is supporting 64 digital I/O points and a 2 channel LI module with remote drops. 192 digital I/O points and 6 register modules are assigned to the drops among the two channels.

The maximum update time for any drop on channel 1 is 54.7ms. The maximum update time for the drop on channel 2 is 84.0ms. For more information, refer to Appendix A, LI/RI Update Time.

F.2.1 LOCAL (CPU) RACK

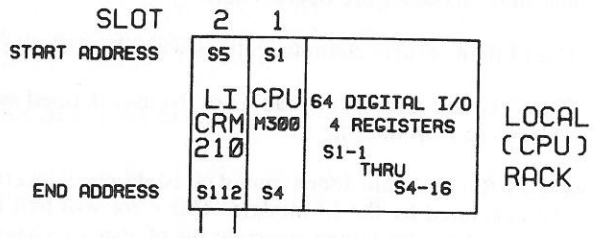

Figure F.1 - Local (Model 300 CPU) Digital Rack Address Assignments

Slot 1- Four registers have been assigned to the Model 300 for the 64 local digital I/O. (S1-1 thru S4-16)

Note that in a digital rack, addresses for digital I/O are always assigned to slot 1.

Slot 2- The remaining 108 registers are assigned to the LI module (CRM-210) so the CPU may access and use them as either external or internals. (S5 thru S112)

F.2.2 CHANNEL 1, DROP #1 RACK ADDRESS ASSIGNMENTS

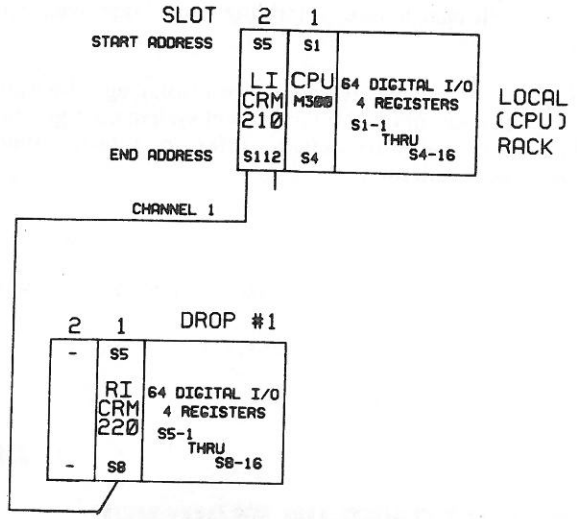

Figure F.2 - Channel 1, Drop #1 Rack Address Assignments

A total of 64 digital I/O points are assigned to this remote drop. Note that this drop uses a low profile RI (Class 8030 Type CRM-220) which is designed to fit into four function I/O rack assemblies only. This same addressing scheme can be used if a Type CRM-222 were used.

Slot 1- The RI module (CRM-220) has been assigned four registers for the 64 remote digital I/O. (S5-1 thru S8-16)

Slot 2- No address assignments required.

F.2.3 CHANNEL 1, DROP #2 RACK ADDRESS ASSIGNMENTS

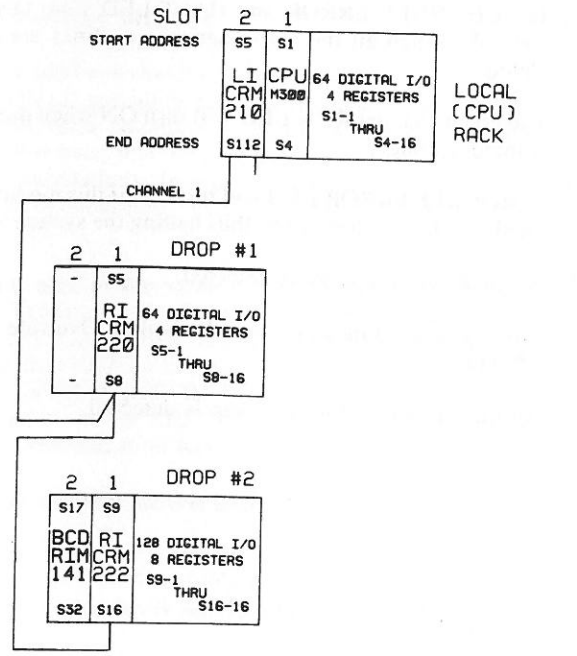

Figure F.3 - Channel 1, Drop #2 Rack Address Assignments

The second drop is similar to the first in that it has digital I/O. However, this drop has double the digital I/O points and is also using a BCD input module.

Slot 1- The RI module (CRM-222) has been assigned 8 registers for the 128 remote digital I/O. (S9-1 thru S16-16)

Slot 2- 16 registers have been assigned for the BCD input module. (S17 thru S32)

F.2.4 CHANNEL 2, DROP #1 RACK ADDRESS ASSIGNMENTS

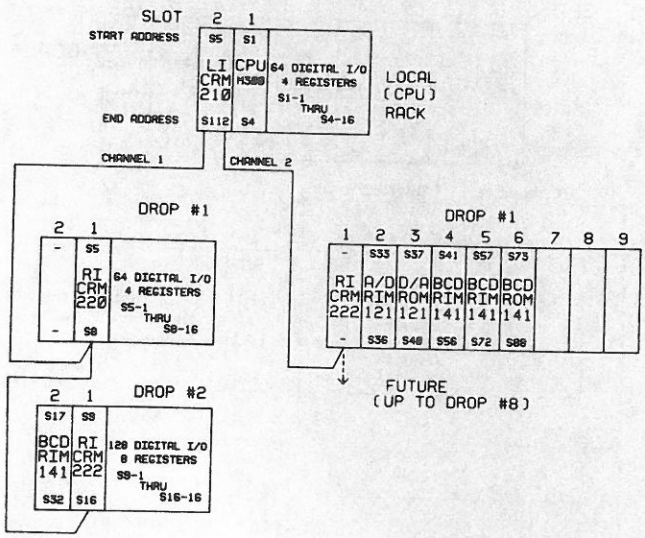

Figure F.4 - Channel 2, Drop #1
Rack Address Assignments

For this next drop, a 9 slot register rack is connected to channel 2. Note that the addresses for channel 2 start at one greater than the ending address for channel 1. In other words, when channel 1 ends, channel 2 begins.

Requirements for register modules vary. As an example, a 4 channel analog module requires 4 registers for complete addressing. A BCD I/O module requires 16 registers.

Slot 1- No address registers are required since there are no digital I/O points.

Slot 2- Four registers are assigned to a 4 channel analog input module. (S33 thru S36)

Slot 3- Four registers are assigned to a 4 channel analog output module. (S37 thru S40)

Slot 4- 16 registers are assigned to a 16 (4 digit) BCD input module. (S41 thru S56)

Slot 5- 16 registers are assigned to a 16 (4 digit) BCD input module. (S57 thru S72)

Slot 6- 16 registers are assigned to a 16 (4 digit) BCD output module. (S73 thru S88)

Slot 7-9*- No address assignments required.

* Slot 9 and above cannot be addressed by the Model 300. (These slots may be used to power any register module which require only power and does not require registers such as a D-LOG or SY/NET module).

F.3 Local (Model 300 CPU) Register Rack Address Assignments

This second example demonstrates the use of a Model 300 in a register rack. The local (CPU) rack will house the processor, LI and 5 additional register modules.

Note how the addresses are assigned in very much the same manner as the previous example and specifically the digital I/O and register modules.

The first 16 of the 112 total addressable registers of the Model 300 are used for digital I/O since they may be forced.

The Model 300 Processor can support one LI module. The addition of a LI module *does not* increase the number of additional registers, however, it does permit the use of remote I/O.

In order to maximize the number of registers available to the LI, and facilitate for easier future expansion, the ending addresses are calculated for the slots by subtracting the number of registers required for each module in the CPU rack from the available registers. (i.e. The ending address for the last addressed slot, in this case slot 8, is 112 and the preceding slot's ending address should be 112 minus the number of registers required for this module.)

The maximum update time for any drop on channel 1 is 17.4ms. The maximum update time for the drop on channel 2 is 44.4ms. For more information on how to calculate LI/RI update times, refer to Appendix A, LI/RI Update Time.

F.3.1 LOCAL CPU RACK

SLOT	1	2	3	4	5	6	7	8	9*	
START ADDRESS	-	S1		S57	S61	S65	S81	S97	-	LOCAL (CPU) RACK
	CPU M300	LI CRM 210		A/D RIM 121	D/A ROM 121	BCD RIM 141	BCD RIM 141	BCD ROM 141	D-LOG DLM 110	
END ADDRESS	-	S56		S60	S64	S80	S96	S112	-	

* SLOT 9 CANNOT BE ADDRESSED BY THE MODEL 300. (THIS SLOT MAY BE USED TO POWER A D-LOG OR SY/NET MODULE)

Figure F.5 - Local (Model 300 CPU)
Register Rack Address Assignments

Slot 1- No address registers are required since there are no digital I/O points.

Slot 2- 56 registers are assigned to the LI (CRM-210) for the 2 remote I/O channels and future expansion. (S1 thru S56)

Slot 3- No register assignments required. (Spare slot for future expansion.)

Slot 4- 4 registers are assigned to a 4 point analog input module. (S57 thru S60)

Slot 5- 4 registers are assigned to a 4 point analog output module. (S61 thru S64)

Slot 6- 16 registers are assigned to a BCD input module. (S65 thru S80)

Slot 7- 16 registers are assigned to a 16 (4 digit) BCD input module. (S81 thru S96)

Slot 8- 16 registers are assigned to a 16 (4 digit) BCD output module. (S97 thru S112)

Slot 9- This slot is not addressable by the Model 300. (This slot can be used to support a module which only requires power. For example, a D-LOG (DLM-110) or SY/NET (CRM-510).)

F.3.2 CHANNEL 1, DROP #1 RACK ADDRESS ASSIGNMENTS

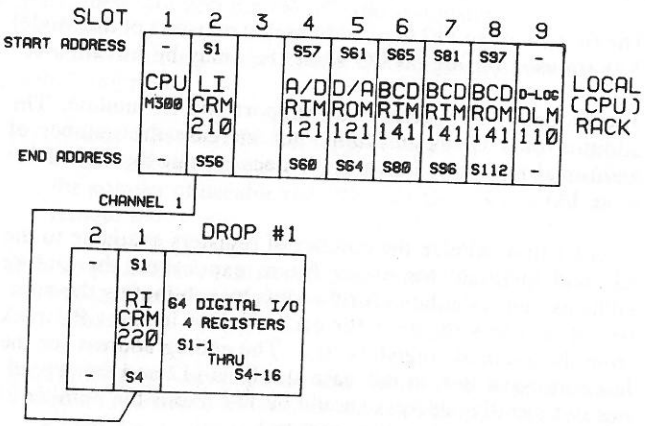

Figure F.6 - Channel 1, Drop #1
Rack Address Assignments

This drop will support 64 I/O. It uses a Type CRM-220 RI module which means that the drop must use 4 function I/O rack assemblies.

Slot 1- Four registers are required for the 64 digital I/O. (S1-1 thru S4-16)

Slot 2- No address assignments required.

F.3.3 CHANNEL 1, DROP #2 RACK ADDRESS ASSIGNMENTS

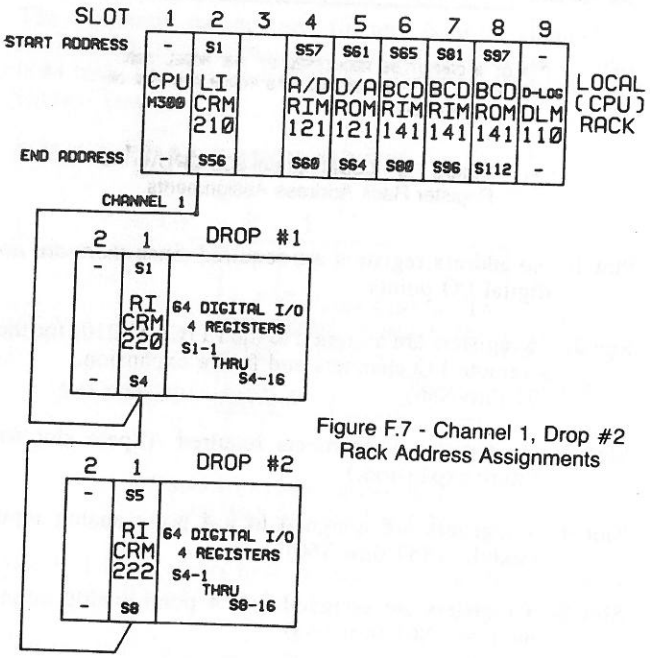

Figure F.7 - Channel 1, Drop #2
Rack Address Assignments

This drop is identical to Drop #1 in that it has 64 digital I/O and differs in only that a Type CRM-222 is used. The Type CRM-222 RI can be used in any type of rack assembly, 4 or 8 function I/O rack as well as register rack assemblies.

Slot 1- 4 registers are required for the 64 digital I/O. (S5-1 thru S8-16)

Slot 2- No address assignments required.

F.3.4 CHANNEL 2, DROP #1 RACK ADDRESS ASSIGNMENTS

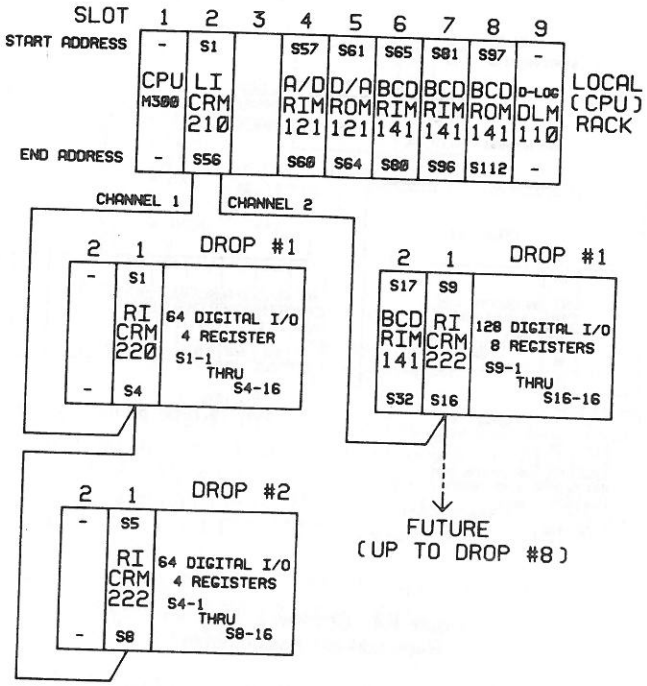

Figure F.8 - Channel 2, Drop #1
Rack Address Assignments

This drop supports 128 digital I/O and a BCD input module.

Slot 1- 8 registers are assigned to support the 128 digital I/O. (S9-1 thru S16-16)

Slot 2- 16 registers are assigned to the BDC input module. (S17 thru S32)

Instruction Bulletin

Subject: **SY/MAX®**

CLASS 8020 TYPE SCP-521, 522, 523, 544
MODEL 500 PROCESSOR

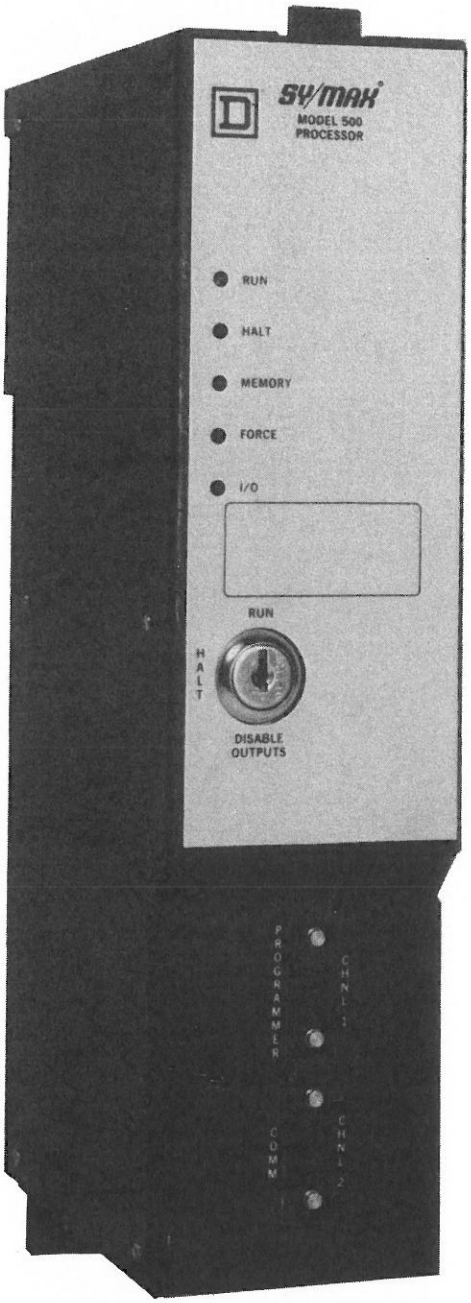

DESCRIPTION:

MODEL 500 HARDWARE

The following describes in detail the hardware features of the SY/MAX Model 500 Processor. Information on other SY/MAX PC Family devices used in conjunction with the Model 500 Processor are available in other SY/MAX Instruction Bulletins.

The Model 500 is a small, yet very powerful processor designed for small to medium applications. It is enclosed in a sheet metal steel case, and contains processor logic and memory for storing the user's ladder diagram control program.

CAUTION

Square D Processors with different capabilities may be physically interchangeable. Replacement processors should be of the same Class and Type. ANYTIME a replacement is made, processor operation and user program must be compatible. Refer to the appropriate instruction bulletins.

ATTENTION

This device contains static sensitive I.C.'s and is subject to damage by electrostatic discharge. Do not handle device by gold edge contacts.

Copyright © Square D Company, 1986

Supersedes 30598-105-02, 9/85
Printed in U.S.A.

SQUARE D

AJR

TABLE OF CONTENTS

Section	Title	Page
1.0	PROCESSOR FEATURES	6
2.0	SUMMARY OF PROCESSOR SPECIFICATIONS AND CAPABILITIES	7
2.1	Dimension Drawings	7
2.2	Instruction Set	8
3.0	REGISTERS AND I/O	11
4.0	ADVANCED INSTRUCTION CAPABILITIES	11
5.0	PROCESSOR MEMORY	11
5.1	RAM	11
5.2	RAM/UV PROM Mix	11
6.0	PROCESSOR TYPES	12
7.0	KEYSWITCH	12
7.1	Run	12
7.2	Halt	12
7.3	Disable Outputs	12
8.0	INDICATING LIGHTS	12
8.1	Run	12
8.2	Halt	12
8.3	Memory	13
8.4	Force	13
8.5	I/O	13
8.6	All Lights Off	13
8.7	All Lights On	13
9.0	COMMUNICATION PORTS	14
9.1	PROGRAMMER Port	14
9.2	COMM Port	15
9.3	Connectable Devices	16
9.3.1	HAND-HELD OR CRT PROGRAMMER	16
9.3.2	OTHER PROCESSORS	16
9.3.3	SY/NET NETWORK INTERFACE	16
9.3.4	LOADER/MONITOR	16
9.3.5	CARTRIDGE TAPE LOADER/RECORDER	16
9.3.6	PRINTER	16
9.3.7	D-LOG DATA CONTROLLER MODULE	16
9.4	Baud Rates	16
9.5	Forcing	16
9.5.1	INHIBITING THE FORCE OPERATION	16
9.5.2	RELEASING FORCED I/O	17
9.5.3	FORCING AND THE TIMED INTERRUPT FUNCTION	17

10.0 MEMORY ACCESS - SECURITY 18

10.1 Definitions 18
10.2 Introduction 18
10.3 Ladder Security 19
10.3.1 LADDER PROGRAM-SECURITY SUMMARY 19
10.3.2 REGISTER DATA-SECURITY SUMMARY 19
10.3.3 COMMUNICATIONS-SECURITY SUMMARY 20
10.4 Preemptive Port/Route Edit Lock-out 20
10.5 Inhibit Rung Coil 20
10.6 Inhibit and Safeguard Rung 21
10.7 Password Register - Restriction Register 22
10.8 Memory Protect Bit 23
10.9 Force Inhibit Bit 23
10.10 Register Protect Bit 24
10.11 Fencing Registers, 8173-8174 24

11.0 PROCESSOR INSTALLATION 24

11.1 Hardware Configuration 25
11.2 Register Modules 25
11.3 System Configurations 25
11.3.1 CONFIGURATION PROCEDURE 25
11.3.2 SYSTEM ADDRESSING 25

12.0 PROCESSOR TECHNICAL DATA 26

12.1 Memory Utilization 26
12.1.1 RELAYS 26
12.1.2 MEMORY USE TABLE 27
12.2 Scanning Techniques 27
12.3 Processor Block Diagram 28
12.4 Start-Up Sequence 28
12.5 Power Down 28
12.6 Output Reset Operation 28
12.7 Internal Circuit And Operational Checks 29

13.0 PROCESSOR CONTROL REGISTERS 29

13.1 Introduction to Control Registers 29
13.2 Control Register Description 29

14.0 ADVANCED INSTRUCTION SET 35

14.1 Introduction 35
14.2 Matrix LET Instructions 35
14.3 Matrix IF Instructions 37
14.4 Processor Scan Control 39
14.4.1 INTRODUCTION 39
14.4.2 GOTO INSTRUCTION 40
14.4.3 GOSUB INSTRUCTION 40
14.4.4 TIMED INTERRUPT SCAN CONTROL 40
14.5 Immediate Communications Update 41
14.6 Asynchronous Shift Register (FIFO) 42
14.6.1 INTRODUCTION AND GENERAL DESCRIPTION 42
14.6.2 EIGHT CHANNEL FIFO REGISTER 43
14.6.3 SIXTEEN CHANNEL FIFO REGISTER 45

15.0 ADDITIONAL SPECIAL INSTRUCTIONS 46

15.1 Definition of Terms 46
15.2 Register Usage 47
15.3 Overflow Errors 47
15.3.1 THE ACCUMULATOR 47
15.3.2 CONDITIONS CAUSING AN OVERFLOW ERROR 48
15.4 Programming SPECIAL Instructions 47
15.5 List of Special Instructions 49
15.6 Indirect Register Read Operations 49
15.7 Accumulator Manipulations 49
15.8 Miscellaneous Instructions 50

APPENDIX A — EXECUTION TIMES 51

APPENDIX B — ERROR CODES 54

APPENDIX C — RAM/PROM PROCESSOR 62

APPENDIX D — FEATURES OF THE REVISION 7, SERIES M (AND LATER) MODEL 500 PROCESSOR 67

LIST OF FIGURES

Figure	Description	Page
1.1	Processor Features	6
2.1	Processor Dimensions	7
2.2	Instruction Set Table	8
6.1	Processor Type Numbers	12
7.1	Keyswitch	12
8.1	Status Lights	13
9.1	Communication Port Pin Out	14
9.2	Programmer Port Connections	14
9.3	COMM Port Connections	15
9.4	Changing BAUD Rates	16
10.1	Operation of the Inhibit Rung Coil 8176-16	21
10.2	Safeguard Rung	21
10.3	Communication Port Safeguard Codes	22
10.4	Restriction Code Bit Table	23
11.1	Processor Installation	25
11.2	Hardware Configuration	25
12.1	Ladder Diagram Rung with 7 Words	26
12.2	Ladder Diagram Rung with 8 Words	26
12.3	Ladder Diagram Rung with 7 Words	27
12.4	Ladder Diagram Rung with 8 Words	27
12.5	Ladder Diagram Rung with 8 Words	27
12.6	Ladder Diagram Rung with 6 Words	27
12.7	Ladder Diagram Rung with 6 Words	27
12.8	Memory Use Table	27
12.9	Scan Speed of Instructions	28
12.10	Processor Block Diagram	28
13.1	Control Register	29
13.2	Time-Out Bit Pattern Table	32
13.3	BAUD Rate Bit Pattern Table	33
14.1	Matrix LET Instruction	35
14.2	Level Matrix LET Operation	36
14.3	Incremental Matrix LET Operation	37
14.4	Incremental Transitional LET Operation	37
14.5	Repeat Matrix LET Operation	37
14.6	Matrix IF Instruction	37
14.7	Level Matrix IF Operation	38
14.8	Repeat Matrix IF Operation	39
14.9	Repeat Transitional IF Operation	39
14.10	Operation of the GOTO Instruction	40
14.11	Operation of the GOSUB Instruction	40
14.12	TLET Instruction Used to Enter Interrupt Rate and Interrupt Tolerance	41
14.13	Operation of the Timed Interrupt	41
14.14	Example of Immediate Communications Update	42
14.15	Five Zone, Eight Channel FIFO Stack Operation	42

LIST OF FIGURES

Figure	Description	Page
14.16	FIFO Stack Results	43
14.17	FIFO Register Operation In The Model 300 and 500 Processors	43
14.18	Asynchrous Shift Register (FIFO) Rung	43
14.19	Operation of Eight Channel FIFO Register	44
14.20	Eight Channel FIFO Register	44
14.21	Operation of Sixteen Channel FIFO Register	45
14.22	Sixteen Channel FIFO Register	46
15.1	Accumulator Operation	47
15.2	Special Function Operation	47
15.3	Overflow Error Flow Chart	48

APPENDIX B

B.1	Typical P.C. System	60

APPENDIX C

C.1	Type SCP-544 Processor Memory Map	62
C.2	Type SCP-544 Processor PROM Memory Chip Socket	63
C.3	Control Program Configuration	64
C.4	Safeguard Rung	64
C.5	Communication Port Safeguard Codes	64
C.6	Inhibit Rung	65
C.7	Program Example for PROM Subroutines	65
C.8	Program Example for RAM Unprotected Subroutines	66

The products and services described in this manual are useful in a wide variety of different applications. Therefore, the user and others responsible for applying the products and services described herein are responsible for determining their acceptability for each application. While efforts have been made to provide accurate information within this manual, the Square D Company assumes no responsibility for the accuracy, completeness, sufficiency or usefulness of the information contained herein.

Under no circumstances will the Square D Company or any of its subsidiaries be responsible or liable for any damages or losses, including indirect or consequential damages or losses, arising out of either the use of any information contained within this manual or the use of any products or services referenced herein.

No patent liability is assumed by the Square D Company with respect to the use of any of the information, products, circuits, programming or services referenced herein.

The information contained within this manual is subject to change without notice.

1.0 PROCESSOR EXTERNAL FEATURES

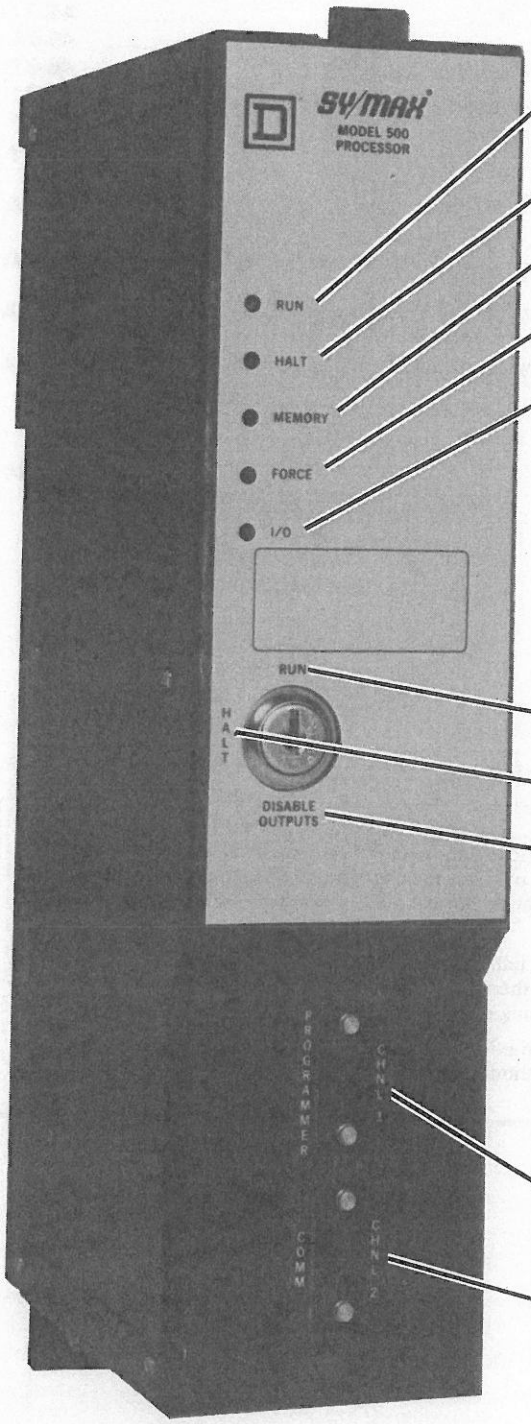

STATUS INDICATORS

RUN (GREEN) — When illuminated, processor is scanning ladder diagram program and operating on I/O's. When flashing, processor is operating on ladder diagram program, but is not energizing any outputs.

HALT (RED) — When illuminated or flashing, processor has halted its execution and is no longer scanning program.

MEMORY (RED) — When illuminated, the red HALT light will flash, indicating that the processor has halted due to a memory error.

FORCE (RED) — When illuminated or flashing, one or several I/O have been forced to an on or off state thereby overriding the ladder diagram program.

I/O (RED) — When illuminated, the red HALT light will flash, indicating that the processor has halted due to a malfunction in the I/O system. The I/O system is regarded as any I/O or register module that the processor controls in a rack assembly.

KEYSWITCH

In this mode, the processor operates on all I/O according to the control program.

In this mode, the processor does not operate and all external outputs are turned off.

In this mode, the processor operates on the control program; however, all external outputs are disabled I/O LED's function per the program operation.

COMMUNICATION PORTS

Communications port to programming and peripheral equipment.

Communications port used for inter-processor communications, access to a computer, loader/monitor, etc.

Figure 1.1 — Processor Features

2.0 SUMMARY OF PROCESSOR SPECIFICATIONS AND CAPABILITIES

Rated Processor Current Draw On SY/MAX Power Supply
- Type SCP-521 ..... 4000ma
- Type SCP-522 ..... 4000ma
- Type SCP-523 ..... 4000ma
- Type SCP-544 ..... 4000ma

Environmental:
- Ambient Temp (Operational) ..... 0° to 60°C
- Ambient Humidity ..... 0 to 95% R.H. (Non-condensing)
- Storage Temperature ..... -40° thru +80°C

Dimensions (WxHxD):
- (Without Key) ..... 3.0 x 13.2 x 6.6 inches (7.62 x 32.5 x 16.76 cm)

Weight (Approx.): ..... 4.0 lbs./1.81 kg.

Scan Speed: ..... Approximately 2.6 ms/k (relay logic only)

Noise Testing ..... Designed to meet NEMA ICS 2-230 (Showering Arc) and ANSI C37.90a (Surge Withstand Capability).

Capabilities:
- Logic ..... Microprocessor-based
- Memory Size 2k, 4k, 8k
- Memory Type ..... RAM or RAM/PROM
- Memory Utilization ..... 1 word per contact, coil
- Memory Overhead ..... 47 words
- Diagnostic Lights ..... RUN, HALT, MEMORY, FORCE, I/O
- Total Addressable Registers ..... Flexible to 2008, 16 Bit data registers (460 registers of which are processor resident).
- External I/O ..... Over 2000 (any mix in groups of 4 or 8 I/O points per module)
- Internal Relay Equivalents ..... Over 2,000
- Data Storage Registers ..... Flexible to 2008, 16 Bit data registers (may contain a 5 digit signed decimal value from -32768 to +32767)
- Register Module Compatibility .. Model 500 processor must be software Revision 7, Series M or later in order to function with the local transfer interface system (8030 CRM-230/232). Also not compatible with Series A or B analog output modules (8030 ROM-121) when installed in CPU rack.

2.1 Dimension Drawings

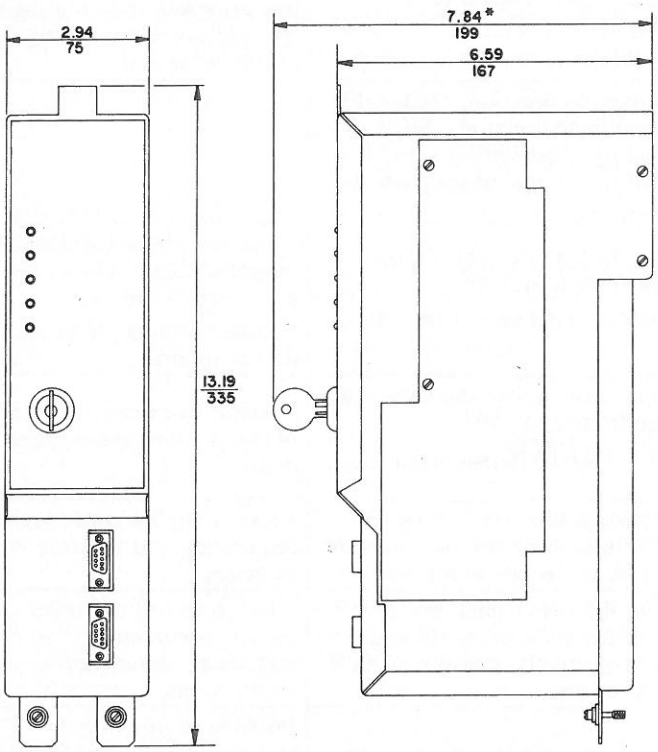

*When the Model 500 Processor is inserted into a Class 8030 Type RRK register rack assembly, the total depth is 8 inches including key.

Figure 2.1 — Processor Dimensions

2.2 Instruction Set (See the programmer instruction bulletin for details.)

Instruction	Display	Description	Remarks
Contact	--⊣⊢-	Represents on/off status of an input, output, internal relay, or register bit.	Input devices can be monitored in HALT.
Coil	----( )-	Represents an output connected to the processor.	Upon a transition to RUN, all coils are de-energized on the first scan. During the second scan, all coils are updated depending on the solution of the logic in that rung.
Internal Relay	R- ----( )-	Represents a control relay function.	Operation is much the same as an output but does **not** directly control output devices.
Latch/Unlatch Relay	----(L)- ----(U)-	Duplicates the action of a mechanically held latching relay; This is accomplished through the use of two internal relay coils with the same address. Once a latch coil is energized, it remains on until the unlatched coil is energized, even if power is removed.	Latched and unlatched rungs must be programmed sequentially. The second rung programmed will override.
Transitional Coil	----(T)-	An internal or external coil which will only energize on a transition of the logic from open to closed. The output will remain on for a single processor scan. The logic must turn the coil off and transition closed again to re-energize the output coil.	Requires two consecutive I/O addresses, one to record the transition and one to remember the last state. For this reason, a transitional coil must be assigned an ODD address number. The processor will then use the next I/O address for recording the state of this same coil.
Master Control Relay	MCR ----( )-	MCR ON allows logic to function. MCR OFF disables outputs and logic functions. MCR controls all succeeding rungs until a new MCR coil is programmed or the end of program is reached.	
Timer	TMR	Timer register can store a four digit decimal value with a range from 0 to 9999. Selectable time bases are .01 sec, .1 sec, .1 min.	Programming techniques allow for programming of ON or OFF delay and interval timers. Replaces timing relays and motor driven timers.
Counter	CTR	Counter register can store a four digit decimal value with a range from 0 to 9999. UP, DOWN, and UP/DOWN counters are standard.	Possible to cascade counters to obtain a count greater than four digits.
Synchronous Shift Register	SHFT	Used to shift individual bits of a storage register in either a forward or reverse direction. Possible to shift 1, 8, or 16 bits at a time.	Used in applications requiring sequencing and replaces drum switches.
Asynchronous Shift Register (First In, First Out)	FIFO	Data is loaded into the FIFO stack and exits out the last zone of the stack using IN and OUT commands respectively. Possible to shift 8 or 16 channels at a time.	Used to record the order of events as they occur, such as in conveyor and alarm annunication applications.
Data Comparison	IF (=,≠, ≥,<)	Compares functions between storage registers or between a storage register and a constant. When an IF comparison is true, the IF box acts like a short.	Possible to program 3 comparisons on one line. Capable of comparing a 5 digit number from -32,768 to +32,767. Math functions can be used in IF statements.
Data Transfer	LET	Transfers data from one storage register to another or presets a constant into a storage register.	Capable of presetting or transferring a 5 digit number from -32,768 to +32,767. Math functions can be used in LET statements.

Instruction	Display	Description	Remarks
Transitional LET, IF	TLET TIF	Transition sensitive; restricts the operation of the LET or IF instruction to one operation for each open to closed transition of the input condition.	
Indirect Register Read	RDSTAT RDDATA FNDBIT	Indirect register read of status field. Indirect register read of data field. Locate and clear the first bit (lowest bit number) set in the indirect register being read.	
Binary to BCD	BCD	Conversion of binary data in a storage register to the binary coded decimal (BCD) equivalent of that data, within a LET or IF instruction.	Allows the processor to drive a BCD type LED display.
BCD to Binary	BIN	Conversion of binary coded data (BCD) in a storage register to the binary equivalent of that data. Used in a LET or IF instruction.	Used in applications to convert the on/off status from a thumbwheel switch to a binary number which the processor can operate on.
Five Function Math Addition Subtraction Multiplication Division Square Root Absolute Value Negate	 + - × ÷ SQRT ABS NEGATE	Math operations are performed left to right. Programmed in either IF or LET instructions. Change sign of current result.	The result of any math operation must not exceed -32,768 or +32,767 or an overflow condition will occur. Also, the intermediate value of -2,147,483,648 or +2,147,483,647 for complex math operations must not be exceeded.
Accumulator Manipulations	ACCALT ADDALT SUBALT DUPALT DUPACC SWAP 16 SWAP 32	Exchange current accumulator with the alternate accumulator. Add current intermediate result to the alternate accumulator. Subtract current intermediate result from the alternate accumulator. Copy alternate accumulator into current accumulator. Copy current accumulator (intermediate result) into alternate accumulator. Exchange low and high bytes of the current intermediate result. Exchange low and high words of the current intermediate result.	These manipulations allow the user to preserve 32-bit precision when performing calculations which extend beyond a single rung.
Identify Number Type	NUMTYP	Identifies mathematical classification of current intermediate result.	
Forcing	CRT INITI- ATED	Forcing overrides the actual input status or outputs as controlled by the ladder diagram.	
Serial communications to other processors or peripherals	TREAD TWRTE TALRM TPRNT	Transfer storage register and I/O status between devices which may be located up to 10,000 ft. apart. All are transition sensitive.	Requires no additional interface hardware other than cable.
Read	T READ	Transfers storage register data from remote device to local processor.	
Write	T WRTE	Transfers storage register data from a local processor to a remote device.	
Alarm	T ALRM	Transfers a numerical value from a local processor to a register in a remote device. The number can range from -32768 to 32767.	
Print	T PRNT	Transfers ASCII coded messages from a local processor to any device that communicates in ASCII. See section 13.2 (Registers 8001 to 8005) for available formats.	Simplified means of producing alarm messages, production reports, etc.

Instruction	Display	Description	Remarks
AND	Λ	A logical function used within an IF or LET command which has the peoperty such that if X and Y are logic quantities, then the function "X AND Y" is defined by the following table: X Y X AND Y 0 0 0 0 1 0 1 0 0 1 1 1	
OR	V	A logical function used within an IF or LET command which has the property such that if P and R are logic quantities, then the function "P OR R" is defined by the following table: P R P OR R 0 0 0 0 1 1 1 0 1 1 1 1	
Exclusive OR	⊕	A logical function used within an IF or LET command which has the property that if S and T are logic quantities, then the function "S XOR T" is defined by the following table: S T S XOR T 0 0 0 0 1 1 1 0 1 1 1 0	
Random Number Generator	RANDOM	Generates random number.	
GOTO	GOTO	Instruction to cause the program to skip over a section of the program to a designated position in the program. Position is determined by a MARK rung placed in memory.	Shortens processor scan time and immediately jumps to a designated position.
Subroutines	GOSUB MARK ST SUB RTN	Group of ladder diagram rungs that can be executed from the user's ladder diagram only by enabling a GO SUB instruction which is programmed in the main program. Subroutines consist of a start of a subroutine (MARK), one or more ladder rungs, and a return (RTN). All subroutines must be programmed after the ST SUB instruction which denotes the beginning of the subroutine area. Nesting (subroutines within subroutines) are allowed up to 8 levels deep.	Applications include variable sequence machines, recipe programs, repeated programs.
Timed Interrupt, Communications Inhibit, Scan Time Limit	Reg. 8165	A special safeguard rung using register 8165 allows the following features: 1. Communications Inhibit 2. Program Viewing Inhibit 3. Safeguard Registers 4. Timed Interrupt-Scan Control 5. Scan Time Limit Refer to Section 10 for details.	Protect Programs used in conjunction with 8176 ⊢——( )—⊣ –16 Scan Control

Instruction	Display	Description	Remarks
Matrix	M LET M IF M	A matrix is a group of storage registers handled as a unit. Formulates multi-register data transfers and math functions. Also allows multi-register compare statements.	Application includes machine diagnostics, menu selection, etc.
Immediate Communications Update	8176 ----( )- -11 or 12	Processes incoming data values from other devices which were received during processor scanning.	

Figure 2.2 — Instruction Set Table

3.0 REGISTERS AND I/O

The SY/MAX Model 500 Processor performs relay ladder diagram logic, counting, and timing functions, shift register functions, data manipulation, serial communications, and diagnostics, along with several powerful advanced instruction capabilities. See Section 2.2 for the complete instruction set listing.

The Model 500 Processor has the ability to address up to 2008 registers for the performance of its control functions. Up to 460 of these registers may reside within the processor with the remainder residing within the local interface modules and within other register modules such as analog I/O's, BCD multiplexed I/O, high speed counters, etc. System addressing is used to enable the processor to communicate with these registers. Refer to Section 10.3.2.

The Local Interface Module registers can be used for external digital I/O in addition to internal relays and data storage registers. Each local interface module has two communication channels and the capability of addressing 8 racks (drops) per channel. A maximum of 128 digital I/O can be connected per drop, therefore the external digital I/O capacity of each local interface module is 2048.

Although the Model 500 Processor can physically support seven local interface modules, this extremely large quantity of digital I/O would far exceed the memory capacity of the Model 500 Processor (2K, 4K or 8K). The Model 500 Processor memory size limits the amount of digital I/O it can control through its ladder program. For example, although one I/O point occupies one word in memory, it would, however, in practice need an estimated 4 words of memory to perform typical relay logic. A realistic I/O capacity of 2048 is the recommended I/O maximum for an 8K processor; 1024 I/O for a 4K processor and 512 for a 2K processor.

4.0 ADVANCED INSTRUCTION CAPABILITIES

The Model 500 Processor has all the functions of the Model 300 Deluxe Processor with the addition of several powerful capabilities which are all standard on the Model 500 Processor. 1) The math functions addition, subtraction, multiplication, division, and square root are standard. 2) Scan control is now possible, which allows the use of subroutines and jumps to make program execution more efficient. 3) Matrix operations allow the manipulation of blocks of data for comparison and math functions which is useful for machine diagnostics. 4) Immediate Communications Update Function allows communication messages to be serviced during the scan of the ladder program. 5) Logical functions such as AND, OR, Exclusive OR provide easy data comparisons. 6) Communication Instructions allow the processor to communicate with other SY/MAX Processors without requiring any special interfacing hardware. 7) A full complement of software protection features which includes ladder, register, and communications security, plus program view inhibit (Revision 7, Series M or later only). Refer to Section 14 for further details on the Advanced Instruction Set or Section 15 for the additional SPECIAL Instructions (Revision 7, Series M or later only).

5.0 PROCESSOR MEMORY

The memory for storing the ladder diagram program is contained in the processor and is available in 2K, 4K, and 8K (24-bit word) sizes of RAM and 8K of RAM/UV PROM.

5.1 RAM (Random Access Memory)

Random Access Memory is widely used for programmable controllers. Volatile memories, such as RAM, utilize a battery to maintain the ladder diagram program upon power loss. The batteries are contained in the power supply which is available as a separate product.

5.2 RAM/UV PROM Memory Mix

This memory is available in one processor type, the Class 8020 Type SCP-544. This processor has an 8K word memory size with a memory combination of RAM and UV PROM. The UV PROM can be programmed to a maximum of 5461 words. The remaining unused memory can be programmed as RAM memory to a total memory size of 8K of both UV PROM and RAM. This allows critical circuits such as safety interlocks and emergency shutdown sequences to be programmed in the UV PROM memory where they cannot be changed, while the RAM memory can be used for other functions which can be altered. Refer to Appendix C for further details.

6.0 PROCESSOR TYPES

Based on the requirements of a particular application, four versions of Model 500 processors are available to fit the needs of the application.

CLASS 8020 TYPE	MEMORY TYPE		MEMORY SIZE		
	RAM	RAM/ PROM	2K	4K	8K
SCP-521	X		X		
SCP-522	X			X	
SCP-523	X				X
SCP-544		X			X

Figure 6.1 — Processor Type Numbers

7.0 KEY-OPERATED MODE SWITCH

The key-operated selector switch allows the processor to be locked into any one of three operating modes. The key may be removed in any position.

7.1 Run

In this mode the processor operates and all external outputs are under control of the ladder diagram program.

7.2 Halt

In this mode the processor is not operating on the program. All external outputs are turned off.

7.3 Disable Outputs

In this mode the processor operates on the ladder diagram program, but all external outputs are held off. Internal outputs and storage registers (counters, timers, etc.) operate according to the program. I/O LED's operate per the user program. This mode allows the control program to be tested without energizing any external outputs, thus preventing the possibility of machine or process damage should the program be incorrect.

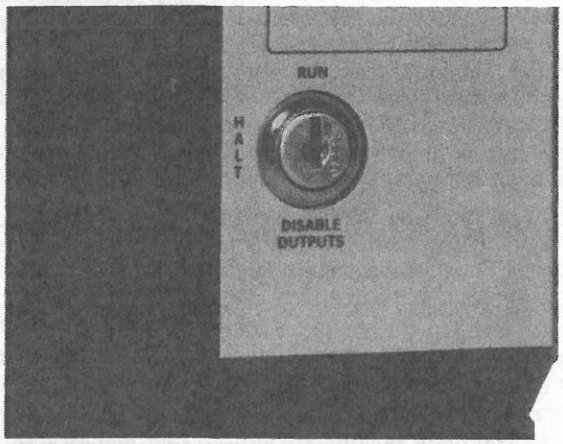

Figure 7.1 — Keyswitch

8.0 PROCESSOR INDICATING LIGHTS

The processor indicating lights indicate the operating status of the processor (HALT or RUN), the general nature of HALT errors, and whether any register bits have been forced.

8.1 Run (Green)

ON — A green LED (Light Emitting Diode) illuminates when the processor is running and the system is operating correctly.

OFF — The LED is off if the processor halts due to the key selector switch being placed in the HALT position, or if the processor is instructed to halt via the programming equipment or user program. The LED will also be off if the processor halts due to system malfunction.

If needed, the processor can be forced into the HALT mode by the ladder diagram program or by the correct sequence of keystrokes on a programming device by setting bits 8176-1 or 8176-3 within the processor. These bits are called the HALT BIT and the HALT/RUN BIT respectively. For detailed information on these bits refer to Appendix A.

FLASHING — The RUN LED flashes if the processor is in the DISABLE OUTPUTS mode due to:

1) Keyswitch placed in the DISABLE OUTPUTS position.
2) Processor commanded to run in the DISABLE OUTPUTS mode by the programming equipment.
3) Processor commanded to run in the DISABLE OUTPUTS mode by ladder diagram program operation.

8.2 Halt (Red)

ON — Several diagnostic checks are made continuously within the processor to insure its proper operation. Should a malfunction be detected within the processor, the processor halts, and the red LED is illuminated. Whenever the HALT LED is on continuously, this indicates that the processor itself has failed. Under any other failure, the LED will flash and the other diagnostic lights can be interpreted to indicate the cause of the failure.

In the event of a processor error indication the following steps should be taken:

1. Remove line power from the output devices. **No other action should be taken before this step is completed.**
2. Turn the processor keyswitch to the HALT position.

3. Diagnose and correct the fault.
4. Verify correct operation of the system with the keyswitch in the DISABLE OUTPUTS position.
5. Restore power to the outputs and turn the keyswitch to RUN.

OFF — If the LED is off, the processor is either operating in the RUN mode or the DISABLE OUTPUTS mode (depending on whether the RUN LED is on continuously or flashing).

FLASHING — If the HALT LED is flashing, one of the following conditions has occurred:

1) The key selector switch has been placed in the HALT position.
2) User program or programming device has instructed the processor to halt. In this case, the light will continue to flash until the HALT BIT is cleared and the processor key selector switch is toggled to HALT and back to RUN.
3) A memory or I/O error has occurred in which case either the MEMORY or I/O light will be on.

8.3 Memory (Red)

ON — A red LED illuminates when the processor has detected an error in the user memory. This condition can also be caused by trying to run the processor (keyswitch in RUN or DISABLE OUTPUTS) when no ladder diagram program or system addressing exists in memory. When the memory LED is on, the HALT LED will be flashing, indicating the processor has halted due to this error condition.

OFF — User memory is operational.

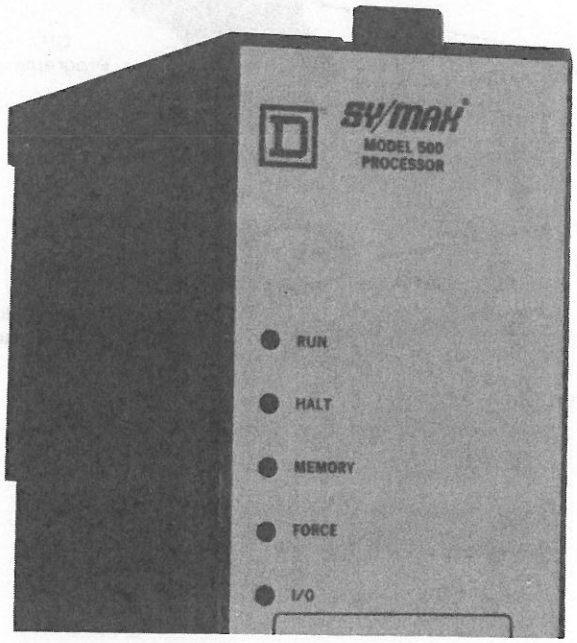

Figure 8.1 — Status Lights

8.4 Force (Red)

ON — The forcing LED indicates that one or more inputs or outputs have been forced to the on or off state, and that forcing via channel 2 (COMM port) is disabled (8176 bit 5=1). Forcing overrides the actual input status or output commands per the ladder diagram program. This forcing may have been via the programming equipment or communication system.

OFF — When the LED is off, this indicates no I/O's are being forced.

FLASHING — If the forcing LED is flashing this indicates that one or more inputs or outputs have been forced to the on or off state, and forcing is allowed (8176 bit 5=0) for channel 2 (COMM port).

8.5 I/O (Red)

ON — This LED is illuminated when a malfunction has occurred within the internal registers or external input/output system. In this case, the HALT LED will be flashing, indicating the processor has halted due to this error condition. By entering the DATA mode and displaying Control Register 8175 further diagnostic information can be obtained. Refer to Appendix B "Error Codes" for details.

OFF — I/O system operational.

8.6 All Lights Off

If all indicating lights are off, this indicates loss of power to the processor. Conversely, if power is applied, at least one LED will be on or flashing.

8.7 All Lights On

If all indicating lights are on, this indicates incorrect power-up sequence; check power supply and cabling.

9.0 COMMUNICATION PORTS

There are two, 9-pin differential communication ports on the lower front portion of the Model 500 processor. These ports provide the necessary connections to the programming equipment and other peripheral devices. The PROGRAMMER port allows complete access to the system while the COMM port can be set-up to allow only certain prescribed functions. See Section 10, Memory Access-Security.

Both ports independently support block READ/WRITE commands for a maximum count of 128 registers.

Both ports have an automatic time-out feature available for monitoring communication integrity when using READ, WRITE, or ALARM statements. See Section 13.2, Register 8168.

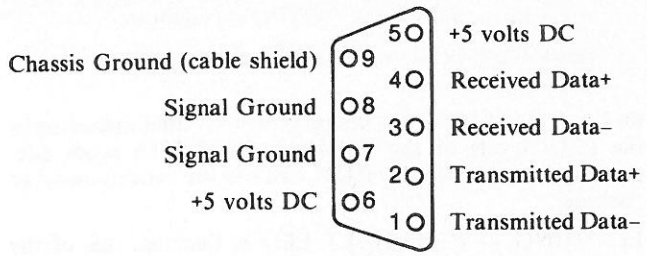

Figure 9.1 — Communication Port Pin Out

9.1 PROGRAMMER Port — CHNL 1

Programming devices, such as the hand-held or CRT programmer, as well as peripheral devices can be connected to the processor via the PROGRAMMER port. Devices attached to the PROGRAMMER port have full access to the processor. See Figure 9.2 for an example of PROGRAMMER port connections.

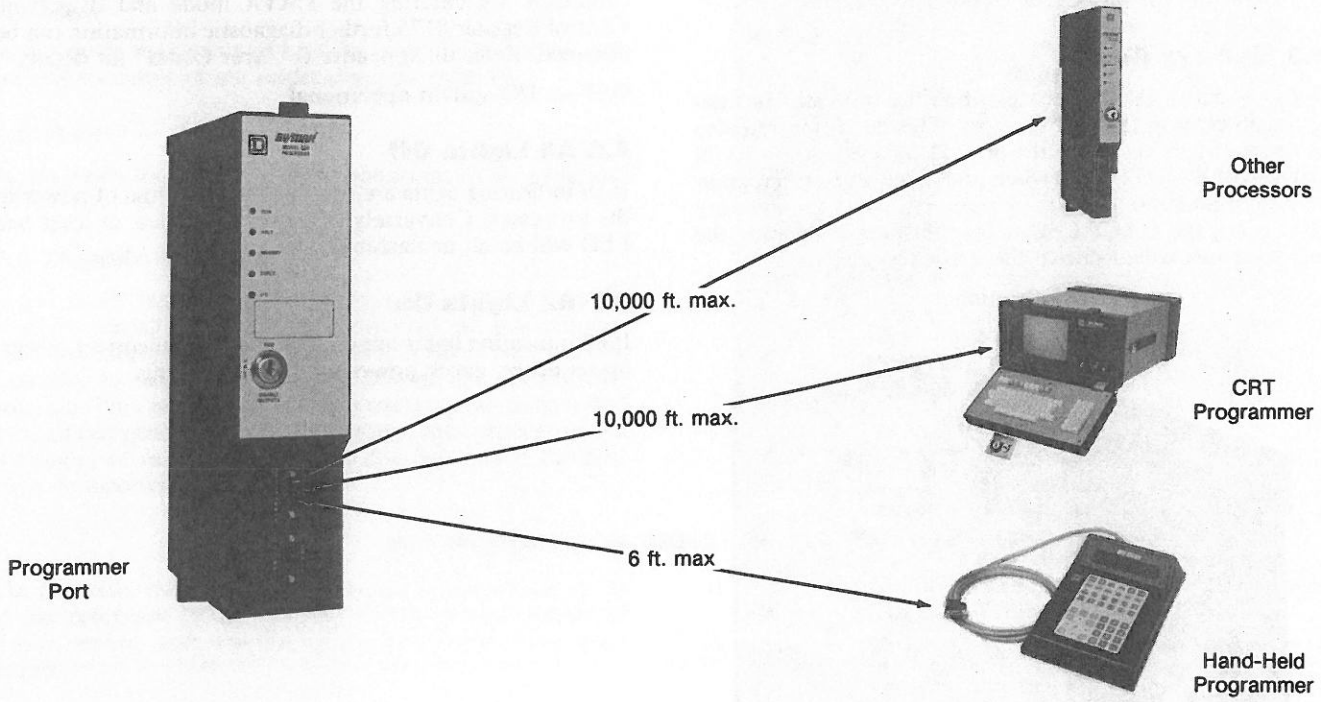

Figure 9.2 — Programmer Port Connections

9.2 COMM Port — CHNL 2

Any one of several devices, peripheral as well as programming, can be connected to the COMM port, thereby greatly expanding the processor's capability and range of applications. The PROGRAMMER and COMM port are identical except for the fencing characteristics of the COMM port. See section 10.11 for details. Figure 9.3 shows an example of peripheral connections.

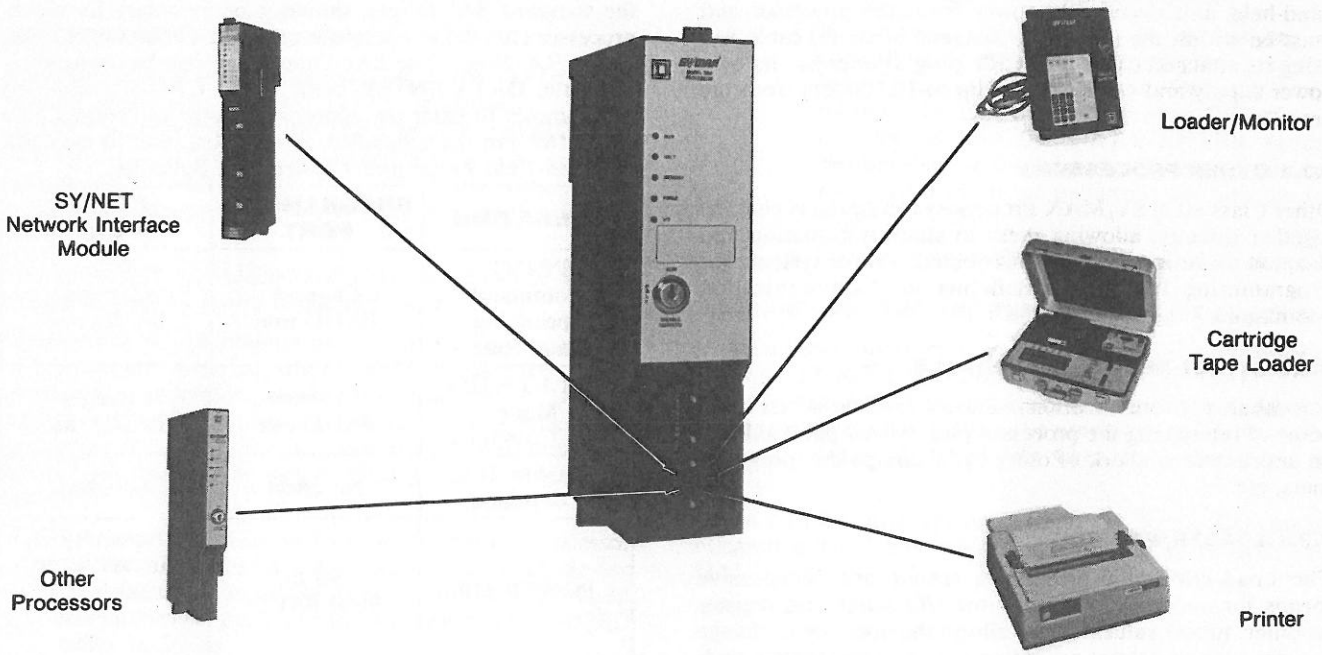

Figure 9.3 — COMM Port Connections

9.3 Connectable Devices

9.3.1 HAND-HELD OR CRT PROGRAMMER

Either the hand-held or the CRT programmer can be connected to the processor. Both devices provide complete monitoring, programming and diagnostic capabilities. The hand-held unit derives its power from the processor and must be within the maximum distance of six (6) cable feet using its attached cable. The CRT programmer has its own power supply and can be placed up to 10,000 feet from the processor.

9.3.2 OTHER PROCESSORS

Other Class 8020 SY/MAX Processors can be daisy chained together directly, allowing them to share information and function as an independent distributed control system. See Programming Instruction Bulletins for Communication commands.

9.3.3 SY/NET NETWORK INTERFACE

A local area communications network module which is capable of interfacing the processor (via twisted pair cable) to an entire data network of other PC's, computers, programmers, etc.

9.3.4 LOADER/MONITOR

The Loader/Monitor provides a simple and inexpensive means for an operator to monitor I/O status and register (counter, timer) values. It also allows the operator to change register values without providing access to the control (ladder diagram) program.

The Loader/Monitor is also capable of displaying alphanumeric messages programmed in processor memory. This provides an inexpensive yet powerful method of alarm annunciation, report generation, and data logging.

The Loader Monitor connects directly to the SY/MAX processor and is designed to be panel mounted within 10 feet of the processor. The addition of a power supply and special cabling will extend the distance up to 10,000 feet. Refer to the Loader/Monitor Instruction Bulletin for further details.

9.3.5 CARTRIDGE TAPE LOADER/RECORDER

By attaching the Cartridge Tape Loader/Recorder, it is possible to record the ladder diagram program onto tape for developing a spare program source. If the program were somehow altered or lost, it could then be quickly reloaded without the need for manual reprogramming with a CRT or hand-held programmer.

9.3.6 PRINTER

Connecting a printer to the communication port allows any messages generated by the processor to be recorded on a hard copy printout. This provides a permanent record of any alarms or data without the need of any additional interfacing equipment.

9.3.7 D-LOG DATA CONTROLLER MODULE

This device is designed to process data from the Model 500 Processor. The D-LOG Module mounts in a register slot and uses register and I/O data to generate documentation such as reports, alarm messages, and graphic displays.

9.4 Baud Rates

The standard communication rate of CHNL 1 and 2 is 9600 BAUD. This is the data rate used when the processor is connected to most peripheral devices (CRT and hand-held programmer, loader/monitor, cartridge tape loader/recorder, etc.). Several methods are available to change the standard BAUD rate, should it be necessary for either processor channel to operate at other than 9600 BAUD. See Figure 9.4. Note: The BAUD rate may also be changed by using the DATA ENTER mode of the CRT or hand-held programmer to enter the appropriate code into control register 8169. For more detailed information, refer to the CRT or Hand-Held Programmer Instruction Bulletins.

OPERATION	PROGRAMMER PORT	COMM PORT
PRINT Command Specifying Baud Rate	Changes BAUD rate	Changes BAUD rate
DATA ENTER Mode LET Command	Changes BAUD rate	Changes BAUD rate
CLEAR ALL Command	No effect	No effect
POWER UP	Set to 9600 BAUD	If memory is corrupt set to 9600 BAUD otherwise no effect

Figure 9.4 — Changing BAUD Rates

9.5 Forcing

The forcing capability allows the user to turn an input or output ON or OFF from the keyboard of the CRT programmer. This is accomplished regardless of either the actual state of the field device (limit switch, etc.) or the logic rung for an output or storage register. The processor's status LEDs will indicate whether any register bits have been forced.

For any FORCE operation to take place, the programmer keyswitch must be in the OVERRIDE position and the register containing the I/O or bit must be a FORCEABLE register. The first 256 registers of each local interface module are forceable registers.

CAUTION: Since FORCING overrides the actual logic of the control program, only a qualified programmer should use the FORCE capability.

9.5.1 INHIBITING THE FORCE OPERATION

With the Model 500 processor, it is possible to inhibit the FORCE capability of the COMM port (CHNL 2) by setting BIT 5 of register 8176 ON (1 = FORCE inhibit, 0 = Forcing Allowed). This capability does not apply to the PROGRAMMER port (CHNL 1). Two methods can be used to inhibit forcing: 1) program a rung into your ladder program which energizes the coil addressed S8176-05, or 2) with the CRT programmer in the DATA ENTER mode, enter a 1 into bit 5 of register 8176.

Once set, S8176-05 will remain ON until it is turned OFF by either a DATA ENTER operation or a CLEAR ALL MEMORY operation.

NOTE: When forcing has been inhibited through the use of BIT S8176-05, attempts to force I/O through the COMM port results in error code number 22 displayed on the CRT screen.

See also Section 10.7 for use of FORCING restrictions in conjunction with password security.

9.5.2 RELEASING FORCED I/O

There are several methods of releasing FORCED I/O. One method of releasing all FORCED I/O is through the use of the CRT programmer and the selection of the FORCE and CLEAR ALL softkeys. Also, forced I/O can be released **individually** through the use of the CRT programmer. Refer to the CRT programmer instruction bulletin for further details.

Another means of releasing **all** FORCED I/O can be accomplished by cycling power to the processor.

Forcing will be maintained as long as the processor can communicate with another SY/MAX device (CRT programmer, processor, network interface module, D-LOG module, etc.). When the communication link is broken, **all** forcing will be cleared, this includes the disconnection of all cables from the ports as well as turning the CRT programmer OFF.

NOTE: 1. One exception to this rule is when a processor continues to have a remaining SY/MAX device connected to **one** of its communication ports. In this case, the processor will retain all FORCED conditions.

2. If an external output has no controlling rung in the ladder program, and the output has been forced ON, it will remain ON after being released. To turn the output OFF after it is released, cycle the processor keyswitch between HALT and RUN or remove power to the processor, or use the DATA ENTER mode.

3. If an internal register (internal relay coil) has no controlling rung in the ladder program, and has been forced ON, it will remain ON after being released. To turn the internal relay OFF after it is released, use the DATA ENTER mode. Neither cycling the processor keyswitch nor removing power to the processor will turn the internal relay OFF.

4. Forcing an unlatched coil ON will latch the coil.

9.5.3 FORCING AND THE TIMED INTERRUPT FUNCTION

When a timed interrupt is programmed and the processor is in RUN, FORCED I/O cannot be released by the FORCE-CLEAR ALL command, by disconnecting the programmer, nor by removing power from the programmer. These methods will release all forced I/O when the processor is in HALT.

When a timed interrupt is programmed, forced I/O can be released individually while the processor is in RUN or HALT.

10.0 MEMORY ACCESS - SECURITY

The standard Model 500 processor system provides security measures to control the unauthorized access to user ladder programs, labels, rack addressing and data storage registers using programming equipment and/or other devices connected to the system.

10.1 Definitions

Editing:	The use of external equipment to insert, replace, delete or clear rungs, rack addressing, and labels that exist in the processor memory.
Register:	Storage of I/O status, data values, or control information.
Non-Priority Register Read:	Access to registers through programming equipment to display or copy data values stored in a Model 500 data register.
Non-Priority Register Write:	The use of programming equipment to enter or store a new data value in a Model 500 data register.
Priority Register Read:	The use of non programming devices to recall a Model 500 data register stored value. Typically, this type of communication occurs between 2 or more processors.
Priority Register Write:	The use of non programming devices to write or store a new value into a Model 500 data register. Typically, this type of communication occurs between 2 or more processors.
Programming Equipment:	SY/MATE™ programming package, SY/MAX CRT (SPR-200, 250, 300) SY/MAX hand-held programmer (SPR-100) and the loader/monitor (SLM-100).
User Memory	The memory in which the user ladder program, rack addressing and labels are stored.
Storage Register Memory	Memory where data register values are stored in the Model 500, separate from user memory.

10.2 Introduction

The Model 500 processor has numerous security features which are listed below. Refer to the section numbers that follow each feature for instructions on usage.

The features are classified into two types: 1) those features that protect ladder memory and 2) those that protect the data storage registers.

Each feature is listed by a keyword that associates the feature with its method of implementation.

Some methods are capable of enabling more than one security feature. For instance, the safeguard rung contains eight parameters. When the user specifies any of the parameters as being equal to zero, those security features governed by their respective parameters are disabled.

Each security feature listed in the summary refers the reader to the section containing detailed instructions for implementation.

10.3 Ladder Security

The figures below illustrate a summary of the ladder-security measures available to the Model 500 system user. Each layer of protection refers to a section where the protection features are explained.

10.3.1 LADDER PROGRAM - SECURITY SUMMARY

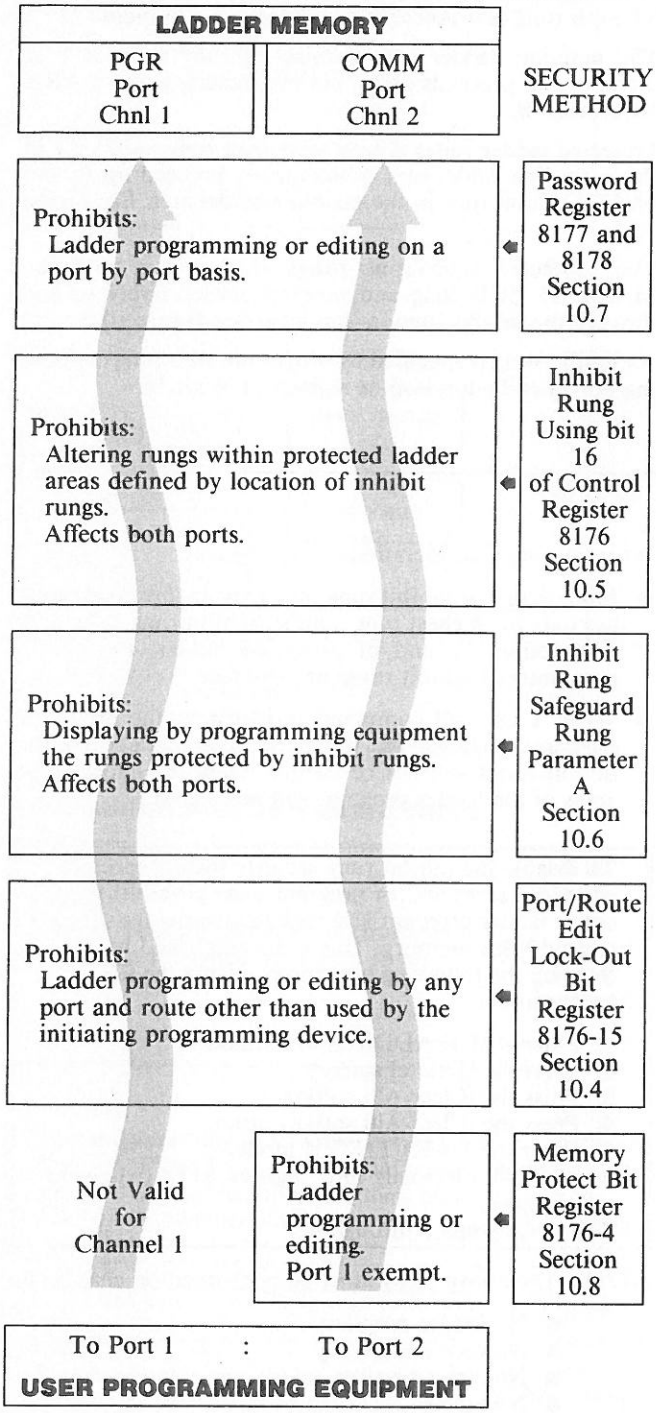

10.3.2 REGISTER DATA - SECURITY SUMMARY

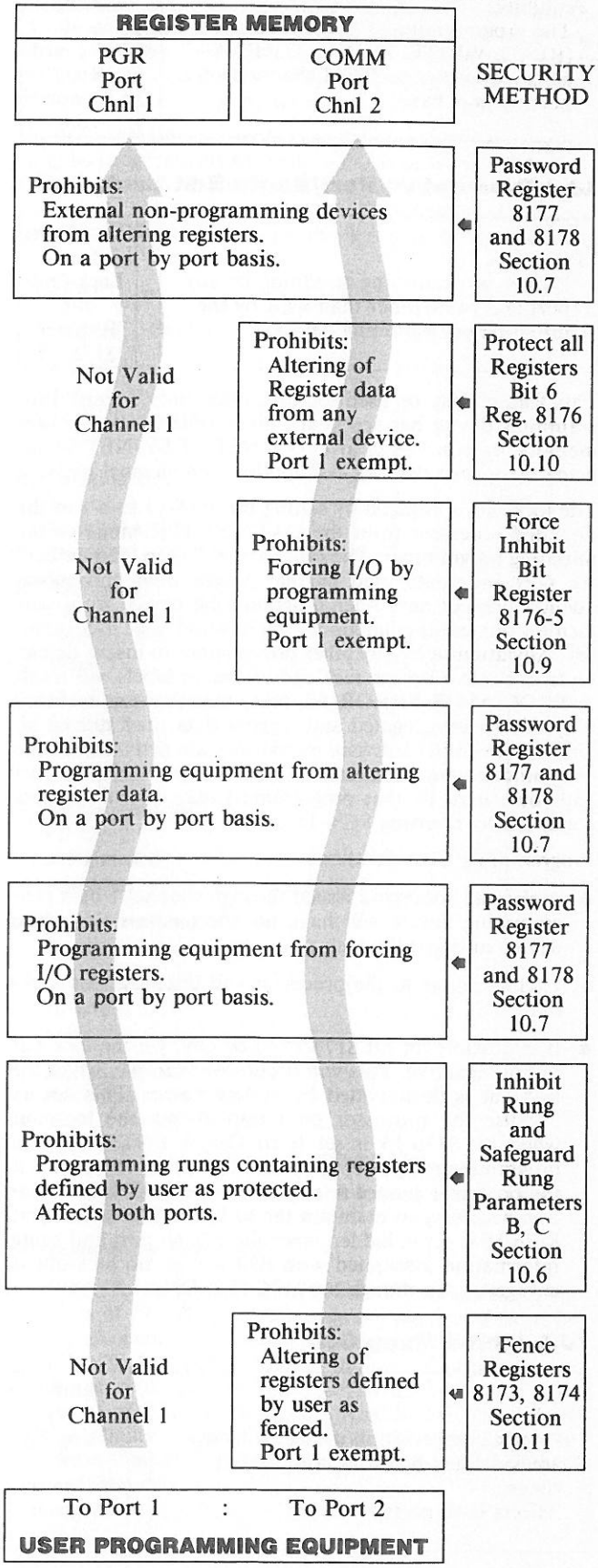

10.3.3 COMMUNICATIONS - SECURITY SUMMARY

Prohibits: The programming of COMM rungs (READ, WRITE, PRINT, ALARM) assigned to user specified channels on a port by port basis.	←	Inhibit Rung with Safeguard Rung Section 10.6

10.4 Preemptive Port/Route Edit Lock-Out

Prohibits: Ladder programming or editing by any port and route other than used by the initiating programming device.	←	Port/Route Edit Lock-Out Bit Register 8176-15

This feature may be used to ensure that only a single programming device has access at a given time to altering user memory in a processor over SY/NET. If SY/NET is not being used, then the lock-out applies on a channel basis.

The lock-out is engaged by setting bit 8176-15 to a 1 in the intended processor from the DATA ENTER mode of the initiating programmer. The processor will then "remember" the port and route used by that programmer and subsequently prevent any other programming device from performing any editing functions which would alter user memory. Any attempt by any other programmer to insert, delete, replace, or clear ladder, rack addressing, or labels will result in PROCESSOR ERROR 49. Note that the user memory may still be interrogated and register data may still be altered, unless other software restrictions are active. Only the programmer which activated the lock-out (i.e. the same port and route used by that programmer) may de-activate this condition by resetting 8176-15 to a 0.

Programming Considerations

- A clear-all command issued through channel 1 by a programming device will have no effect unless this same device initiated the lock-out.
- Cycling power to the processor will disengage the lock-out.
- It is possible for bit 8176-15 to be ON, yet the lock-out to not be active. This will occur, for example, when the lock-out is de-activated by cycling power. This occurs because the processor only implements the lock-out when bit 8176-15 is set from DATA ENTER by the programmer; if power is cycled, the bit remains set but the processor cannot retain the port and route information necessary to maintain the lock-out. Similarly, if bit 8176-15 is set in ladder, since there is no port and route information associated with that action, no lock-out is engaged, even though bit 8176-15 is ON.

10.5 Inhibit Rung Coil

Prohibits: Altering rungs within protected ladder areas defined by location of inhibit rungs. Affects both ports.	←	Inhibit Rung Using bit 16 of Control Register 8176

A maximum of two areas of the user ladder program can be protected from being edited.

The two areas that make up a ladder program are:

MAIN LINE LADDER
SUBROUTINE LADDER

The subroutine area consists of all the subroutines that exist in the user ladder program. This area starts with the MARK ST SUB rung and proceeds to the last rung in memory.

The mainline ladder area consists of rung number 1 in memory and proceeds up to, but not including, the MARK START SUB.

Protected ladder rungs always start with rung number 1 in the main line ladder and consecutively proceed up to and thru the inhibit rung in the mainline ladder area. See Figure 10.1.

The protected subroutine rungs always start with the MARK ST SUB rung and proceed consecutively to and through the inhibit rung in that area. See Figure 10.1.

An inhibit rung is specified by programming a rung containing only a coil addressed as register 8176 bit 16.

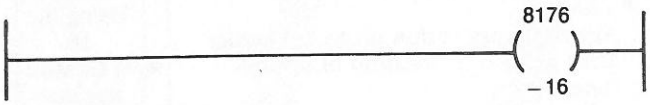

Programming Considerations

- More than one inhibit rung may exist in any given area, but only the highest rung number inhibit rung in an area will define the end of protected ladder. Previously programmed inhibit rungs are ignored.
- When a clear-all command is issued to the processor over any channel, the protected areas defined by the inhibit rungs will not be cleared. Only the unprotected areas of the ladder program will be cleared.

To disable the inhibit rung security feature (protected ladder areas and/or program view prohibit) the entire ladder program and rack addressing must be cleared from memory. This is accomplished by performing the following operations. Using the CRT programmer:

1. Enter RACK ADDRESSING mode.
2. Press the [Delete] softkey.
3. Press the [Clear-All] softkey.
4. Press the [Clear-All] softkey again.
5. Enter the DATA ENTER mode.
6. Store -1 (decimal) into register 8177 (password register).
7. Repeat steps 1 through 4.

NOTE: The above steps must be performed on channel 1.

- No ladder program
- No rack addressing
- No register values
- No labels
- No security protection features enabled

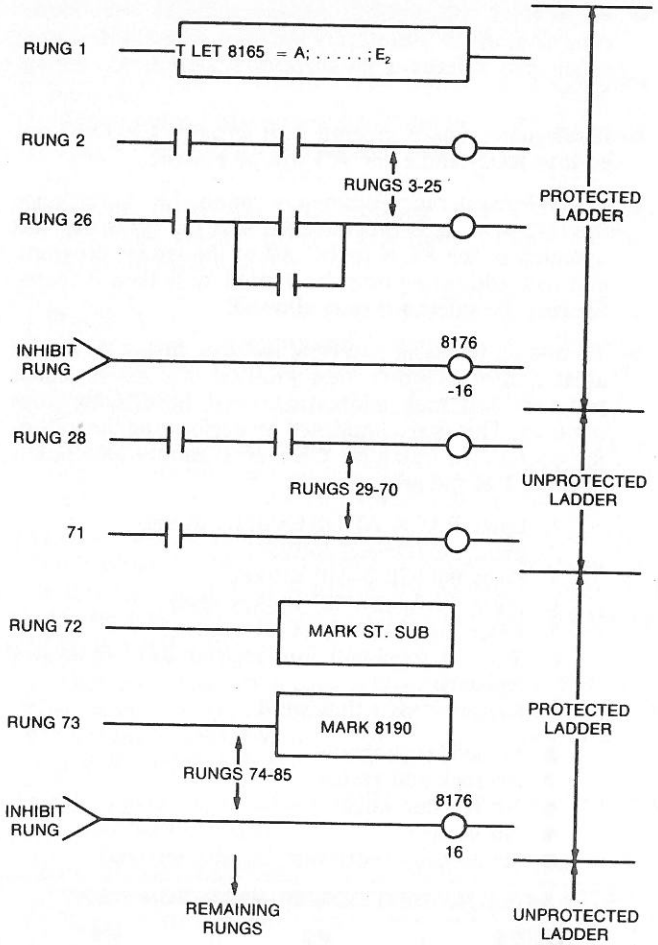

Figure 10.1 — Operation of the Inhibit Rung Coil 8176-16

10.6 Inhibit and Safeguard Rung

Prohibits: Displaying by programming equipment the rungs protected by inhibit rungs. Affects both ports.	Inhibit Rung with Safeguard Rung Parameter A
Prohibits: The programming of COMM (READ, WRITE, PRINT, ALARM) rungs assigned to user specified channels on a channel by channel basis.	Inhibit Rung with Safeguard Rung Parameter A
Prohibits: Programming rungs containing registers defined by user as protected. Affects both ports.	Inhibit Rung with Safeguard Rung Parameters B, C

The safeguard rung allows a variety of security-protection features to be enabled. To utilize the safeguard features the special T-LET rung as described below must be programmed as the first rung in ladder memory. To activate the described parameters contained in the special T-LET rung, an inhibit rung with coil addressed as 8176-16 must be programmed and the CPU keyswitch must be turned from HALT to RUN or be power-cycled.

Proper programming technique dictates that the safeguard rung be programmed while the CPU is in HALT. When the CPU keyswitch is subsequently turned to RUN or power-cycled, the defined parameters are activated during the processor's dummy scan, i.e. the first scan before executing real world I/O control.

Rung #1

—[TLET S8165 = A ; B_1 ; B_2 ; C_1 ; C_2 ; D; E_1 ; E_2]—

- A COMM rung inhibit and restrict program view
- B_1 Starting address-Group 1 safeguarded registers
- B_2 Ending address-Group 1 safeguarded registers
- C_1 Starting address-Group 2 safeguarded registers
- C_2 Ending address-Group 2 safeguarded registers
- D Scan time limit (milliseconds)
- E_1 Tolerance-Scan Interrupt (2.5 msec. counts)
- E_2 Rate-Scan Interrupt (2.5 msec. counts)

Figure 10.2 — Safeguard Rung

Figure 10.2 illustrates the required format of the safeguard rung.

Safeguard Rung Parameters

A When A is a number from 000 to 003 certain combinations of COMM port channels are prevented from being assigned to communication rungs (READ, WRITE, PRINT, ALARM). Note an inhibit coil must exist in the program and the CPU keyswitch be turned from HALT to RUN or be power-cycled in order to activate this feature. Figure 10.3 illustrates the association between the number 000-003 and the restricted COMM port channels.

> When 100 is added to the value 000-003, and the new value 1XX is entered as Parameter A, the ability to view, display, record or print rungs protected by the inhibit rungs (8176-16) is prohibited from both ports.

Safeguarding registers implies prohibiting those registers from being programmed in counters, timers, asynchronous shift, synchronous shift, and to the left of the equal sign in any data "LET" command or from using bits of those registers as coils.

These registers are also protected from other SY/MAX processors writing to them, unless the other processors WRITE communication rung is protected within an inhibit rung ladder area.

B_1 Starting register address in one of two possible groups of consecutively numbered register addresses to be safeguarded. It can be any value from 1 to 8192.

B_2 End register address. It must be greater than or equal to B_1.

B_1, B_2, C_1 and C_2 must be separated by a semicolon generated by the semicolon softkey.

C_1 Starting register address in group 2 safeguarded registers. Can be any value from 1 to 8192.

C_2 Ending register address in safeguarded register group 2. Must be greater than or equal to C_1.

If no inhibit coil exists in the user ladder program, the safeguard register parameters B_1;B_2 or C_1;C_2 are ignored.

If B_1, B_2, C_1, or $C_2 = 0$, that group of registers will not be safeguarded.

D Establishes the scan time limit in milliseconds. Maximum scan time allowed is 32.765 seconds. If the processor exceeds the scan time limit, it will halt and error 970 will be displayed on the CRT status screen. When D is 0, the processor assumes a scan time limit default value of 1 second. Resolution is in 2.5 msec. increments, rounded up. For example, if D = 98, 99, or 100, the scan time limit will fall between 100 and 102.5 msec.

E_1 Timed interrupt tolerance. Refer to Section 14.4.4

E_2 Timed interrupt rate. Refer to Section 14.4.4

General Programming Considerations for the Safeguard Rung

- Although the parameters within the LET box are right justified, it is recommended that 0s be placed in the parameter locations for unused protection features.
- The register assigned to this safeguard T-LET box must be register 8165.
- Only 1 safeguard rung is allowed in the entire user ladder program. It **must** reside as rung number 1 in the ladder memory.
- If safeguard rung is inserted as rung 1 while the CPU is in RUN, it will be interpreted by the CPU as a normal transitional LET statement rather than as the safeguard rung, and be executed accordingly.
- Parameters A;B_1;B_2;C_1;C_2 require at least one inhibit rung exist in the user ladder program. If no inhibit rung exists, the safeguard parameters A;B_1;B_2;C_1;C_2 are ignored.
- If safeguard rung is programmed illegally, CPU will not go into RUN and error 983 will be posted.
- The safeguard rung parameters cannot be altered once the inhibit rung is programmed and the processor has operated in the RUN mode. All of the ladder program, and rack addressing must be deleted; only then is reconfiguring the safeguard rung allowed.
- To disable the safeguard rung features, protected ladder areas and/or program view prohibit, the entire ladder program and rack addressing must be cleared from memory. This is accomplished by performing the following operations. Using the CRT programmer **attached to channel 1 of the processor:**

  1. Enter RACK ADDRESSING mode.
  2. Press the [Delete] softkey.
  3. Press the [Clear-All] softkey.
  4. Press the [Clear-All] softkey again.
  5. Enter the DATA ENTER mode.
  6. Store -1 (decimal) into register 8177 (password register).
  7. Repeat steps 1 through 4.

  - No ladder program
  - No rack addressing
  - No register values
  - No labels
  - No security protection features enabled

SAFEGUARDED COMMUNICATION PORT		
CODE	**#2**	**#1**
X00	NO	NO
X01	NO	YES
X02	YES	NO
X03	YES	YES

Figure 10.3 — Communication Port Safeguard Codes

NOTE: The viewing of protected ladder programs from both ports can be prohibited by letting X = 1. Code = 100 to 103.

10.7 Password Register - Restriction Register

The Model 500 processor utilizes a register (8178) for storing an access code and register (8177) for storing a "password" value. The following restrictions can be imposed upon any combination of channels.

Prohibits: Ladder programming or editing. On a port by port basis.	←	Password Register 8177 and 8178

- Restrict the programming or editing of ladder logic using any programming device. Bit 4 and 8 of register 8178.

Prohibits: Programming equipment from forcing I/O registers. On a port by port basis.	←	Password Register 8177 and 8178

- Restrict the action of forcing of register outputs using programming equipment. Bit 2 and 6 of register 8178.

Prohibits: Programming equipment from altering register data. On a port by port basis.	←	Password Register 8177 and 8178

- Prevent the writing to or changing of data values stored in all the registers using programming equipment. Bit 3 and 7 of register 8178.

Prohibits: External non-programming devices from altering registers. On a port by port basis.	←	Password Register 8177 and 8178

- Prevent the alteration of data values stored in all the registers by processor to processor communications (priority communications). Bit 1 and 5 of register 8178.

The bit pattern in register 8178 (restriction code) determines which COMM port channel operates with which restriction(s). Figure 10.4 illustrates the bit pattern associated with the restriction type and COMM port channel the restriction applies to.

To enable the restriction code, a non-zero password number must be entered via a CRT in the DATA mode into register 8177. If the password value = 0 (8177=0000), the restriction code will not be enabled.

A "-1" appearing in register 8177 indicates the restriction code has been enabled.

The restriction code can be altered or disabled only by the exact password value (except for -1) entered into register 8177. When this is done, register 8177 will display 0.

To disable the password register-restriction code feature, a clear-all memory command on channel 1 is allowed, regardless of the restriction code in effect. This will reset the password register to zero, and delete any rungs not protected by inhibit rungs.

10.8 Memory Protect Bit

Not Valid for Channel 1	Prohibits: Ladder programming or editing. Port 1 exempt.	←	Memory Protect Bit 4 Control Register 8176

When bit 4 of register 8176 is "ON", all of user memory (ladder program, rack addressing and user labels) is protected from being edited. This protection feature affects COMM port channel 2.

COMM PORT CHANNEL		BIT	RESTRICTION
REG. 8178	1	1	Processor to processor communications. Restrict writing data values to the data registers in the Model 500.
		2	Restrict the forcing of I/O registers in the Model 500 using programming equipment.
		3	Programming equipment to processor communications. Restrict writing data values to the data register in the Model 500.
		4	Restrict the ability to program or edit the user ladder program.
	2	5	Processor to processor communications. Restrict writing data values to the data registers in the Model 500.
		6	Restrict the forcing of I/O registers in the Model 500 using programming equipment.
		7	Programming equipment to processor communications. Restrict writing data values to the data registers in the Model 500.
		8	Restrict the ability to program or edit the user ladder program.

Figure 10.4 — Restriction Code Bit Table

To enable this feature, two methods can be used.

1. Program a rung containing only a coil addressed as bit 4 of register 8176.

2. With a CRT in the DATA ENTER mode, enter a 1 in bit 4 of register 8176.

To disable this feature delete this rung and reset bit to "0".*

10.9 Force Inhibit Bit

Not Valid for Channel 1	Prohibits: Forcing I/O by programming equipment. Port 1 exempt	←	Force Inhibit Bit 5 Control Register 8176

When bit 5 of register 8176 is "ON" the forcing of I/O registers using programming equipment via COMM port channel 2 is prohibited. This restriction feature is ignored by channel 1.

To enable this feature, two methods can be used:

1. Program a rung containing only a coil addressed to bit 5 of register 8176.

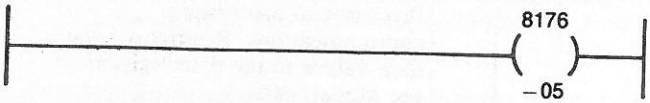

2. With a CRT in the DATA ENTER mode, enter a 1 in bit 5 of register 8176.

To disable this feature delete this rung and reset bit to "0".*

10.10 Register Protect

Not Valid for Channel 1

Prohibits:
Altering of register data by any external device.
Port 1 exempt

Protect All Registers Bit 6 Control Register 8176

When bit 6 of register 8176 is "ON" the altering of data stored in all the data registers using programming equipment on COMM port channel 2 is prohibited. This restriction feature is ignored by channel 1.

To enable this feature, two methods can be used:

1. Program a rung containing only a coil addressed to bit 6 of register 8176.

2. With a CRT in the DATA ENTER mode, enter a 1 in bit 6 of register 8176.

To disable this feature delete this rung and reset bit to "0".*

10.11 Fencing Registers, 8173-8174

Not Valid for Channel 1

Prohibits:
Altering of registers defined by user as fenced.
Port 1 exempt

Fence Register Using Control Registers 8173 and 8174

Registers 8174 and 8173 contain, respectively, the beginning and ending addresses of a user defined block of data and/or control registers that are **unprotected.** All registers outside of this block are protected from being altered by other devices or equipment. The default values on initial power-up are 1 and 8176.

11.0 PROCESSOR INSTALLATION

The Model 500 Processor is inserted into the two left-most slots of the Register Rack Assembly (Class 8030 Type RRK-100 or 200). The low level power (5V DC) for the processor logic is also provided through the processor edge connector. Power for the entire PC system is provided by a Class 8030 Type PS Power Supply connected to the rack assembly.

The following installation practices must be followed:

- Only one Model 500 may be installed in a CPU rack.
- After installing the module in the CPU rack, secure firmly in the rack by setting the locking bar across the top of the register rack in place and fastening the captive screws at the bottom to the rack. All other register modules installed in the CPU rack must also have their captive screws fastened.
- The Model 500 Processor requires 5 VDC to operate; consequently, the SY/MAX power supply being used must be properly sized and capable of delivering this voltage through the appropriate cable attached from the P1 connector on the power supply to the CPU rack. Refer to the Power Supply Instruction Bulletin 30598-156-XX.
- The processor and power supply must be mounted vertically and be located so as to allow for adequate heat dissipation.

Upon starting up a Model 500 "out of the box", assuming proper operating conditions have been met, the user may encounter "CLEAR MEMORY NEEDED" on the CRT display. Following the keystroke sequence outlined under "Power Up Procedure" in Section 2.2 of the CRT instruction bulletin will initialize the processor to accept a user program.

Note: Proper processor operation is heavily dependent on the factors described above, as well as other good installation practices such as proper grounding, noise suppression, and adequate incoming power. Refer to the SY/MAX Planning and Installation Guide, Instruction Bulletin 30598-175-XX. The user must bear in mind that erratic processor operation may be attributable to factors outside of the processor itself, and other sources of potential problems such as the power supply, cable, rack, etc., should be considered before one concludes that the processor itself must be replaced.

Note: To maintain battery back-up (and thus maintain stored program information — Processor RAM memory **and** data storage registers), the Model 500 Processor and Local Interface Modules **must** remain plugged into the rack assembly and the Type PS Power Supply **must** remain attached to the rack assembly containing the processor module. See Power Supply Instruction Bulletin for battery use, requirements, and specifications.

*NOTE: Deleting rung does not turn off bit and will not by itself disable the feature.

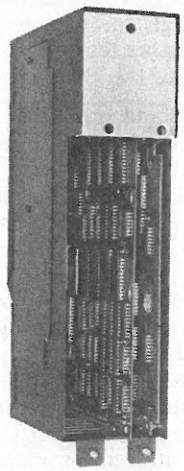

Figure 11.1 — Processor Installation

11.1 Hardware Configuration

The Model 500 Processor resides in the 2 left-most register slots (i.e. slots #1 and #2) of the register rack assembly (Class 8030 Type RRK-100 or 200). Each card receptacle of the register rack assembly is designated as a slot with the left most slot as slot #1. Since the Model 500 Processor is 2 slots wide, it occupies slots #1 and #2. However, the processor edge connector must be inserted into slot #1 only. See Figure 10.1. Therefore, the processor address location is slot #1. Other SY/MAX Processors follow the same convention.

Since the Model 500 Processor **cannot** be inserted into a digital I/O rack (Class 8030 Type CRK, DRK, GRK, or HRK), the system must utilize interface modules to operate with the various digital I/O systems. The digital I/O interface system requires a remote interface module for each digital I/O rack plus one or more local interface modules in combination with the processor. All varieties of the digital I/O racks listed above can be used in any combination to make up a Model 500 I/O system. See Instruction Bulletin 30598-247-XX "SY/MAX Local/Remote Interface" for details.

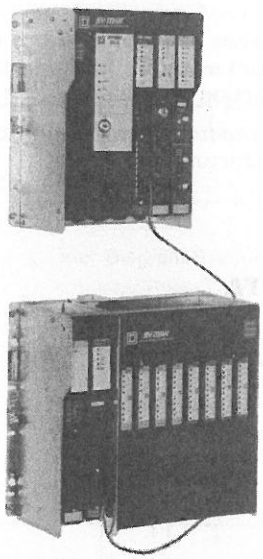

Figure 11.2 — Model 500 Hardware Configuration

11.2 Register Modules

Register modules (sometimes called intelligent I/O) usually contain their own microprocessor and can handle input or output data of a more complex nature than digital I/O. These register modules include analog I/O's, BCD multiplexed I/O's, and high speed counter modules. These modules can be inserted into card receptacles called register slots. A register slot is located in the following digital I/O rack assemblies: Class 8030 Types CRK-210, CRK-300, DRK-210, DRK-300, GRK-110, GRK-210, HRK-100, and HRK-200. Three register slots are located in the Class 8030 Type HRK-150. Also all slots of register racks RRK-100 and RRK-200 will accept the above referenced register modules.

11.3 System Configurations

A Model 500 system consists of a processor, register rack, power supply, I/O racks with power supplies and the various interface and functional modules. Total flexibility exists with regards to configuring and addressing the system components. The following generalized procedure can be used.

11.3.1 CONFIGURATION PROCEDURE

A. Determine the physical location of the Central Processing Unit (Model 500 CPU) rack and all other desired digital I/O and register racks. NOTE: Remote racks can be located a total cable length of 15,000 feet away from the CPU rack since communication transfer is performed serially.

B. At each location, list the digital I/O requirements (both type and quantity) along with any other register modules. This will determine module counts, the number and type of racks required and power supply quantities.

C. The data accumulated from procedures A and B can then be used to select the number of local interface modules and remote interface modules needed. See Instruction Bulletin 30598-247-XX, SY/MAX Local/Remote Interface for further details.

11.3.2 SYSTEM ADDRESSING

A Model 500 Processor can control a maximum of 2008 address registers. A register contains 16 data bits that can be assigned as 16 external I/O points, or as 16 internal relays or as one data storage register. When used as a data storage register, each register may contain a 5 digit signed decimal number value from -32,768 to 32,767. The definition of how the address is used is based upon the device to which it is assigned. For example, a set of addresses assigned to a rack with digital I/O modules will normally only be contacts and coils in the user program. Likewise, a timer requires an address register to store the numerical value associated with the elapsed time. The addresses can be assigned in a variety of ways based on the rules as dictated in the instruction bulletin for the interface modules and the respective register modules.

NOTE: The Model 500 Processor contains 460 addressable registers that **cannot** be used for external digital I/O but they can be applied as processor internal relays or data registers.
Although each data register is versatile as to its use, it can only be used for one purpose throughout your program, (i.e. if register 1 is assigned as an external output it cannot also be assigned as a timer register.)

The following procedure can be incorporated as a general addressing scheme:

A. Since the number of digital I/O and register modules have been determined from the previous procedure, the number of registers required to address each rack can be determined. A system layout sketch will show the CPU rack and all other racks with I/O wiring. This layout will also insure the proper assignment of racks to Local Interface channels. Each Local Interface module has two channels and the capability of addressing 8 racks (referred to as drops) per channel.

B. The Central Processing Unit (CPU) register rack is the rack that houses the Model 500 Processor, Local Interface Modules, and register modules. The rack addressing Mode, "RK ADDR.", of the Deluxe CRT Programmer or Systems Definitions Mode, "SYS DEF." of the standard CRT Programmer can now be used to address the system.

It is important to remember that RACK ADDRESSING requires some user memory to store addressing information. For each rack assigned, (CPU and Remote racks), one word of memory is required. Plus each assigned ending slot address requires one word of memory. For example, a system consisting of a CPU rack containing a processor and three register modules requires 5 words of user memory for RACK ADDRESSING.

C. Assign register addresses to each utilized register slot of the CPU rack beginning with the Model 500 Processor. The Model 500 Processor is always inserted in slot #1 and addresses 1 thru 460 may be assigned to the Model 500 Processor.

D. Other modules can be located in register slots to the right of the processor. Addresses for the register slots **must** be assigned in ascending order in multiples of 4, with a **minimum of 4 registers per slot. This also applies to digital I/O modules which plug into the CPU rack; they also must be assigned 4 registers even though a 16-point module only utilizes the first of the 4 registers.** Register assignment requires that the address register numbers must be divisible by 4 (e.g. 4,8 ..... 460,1000). The Local Interface Module will not only be assigned I/O registers, but also internal relays and data storage registers. Therefore, count the number of I/O registers, internal relays and data storage registers to determine the quantity of addresses to be assigned to the local interface. Remember to reserve register addresses within the local interface module for digital I/O assignments.

NOTE: In the case of the CPU rack, registers should only be assigned to register slots which are occupied by modules. If registers are assigned to empty register slots, these registers will be lost.

E. Other register modules such as analog I/O's, BCD multiplexed I/O's, high speed counter modules, etc. are assigned addresses per the address requirement of each individual module.

F. Digital I/O racks and non-CPU register racks utilize addresses within the range of those previously assigned to the Local Interface module(s) during the CPU rack addressing. Local Interface modules allow communication to these racks by cable connection to a remote interface module located in the remote racks. Only addresses assigned to the Local Interface slot can be utilized by the remote racks. Addresses for all remote racks connected to an individual local interface must have consecutive addresses, that is, all digital I/O are assigned first. Assign to channel 1 all drops, then assign to channel 2 all drops. The remaining addresses within the local interface module after all the drops have been assigned may be utilized for internal relays and/or data storage registers.

G. **Digital I/O Rack Addressing** — For all CRK, DRK, GRK, and HRK racks, slot #1 is always assigned to the digital I/O. Assign the number of registers necessary to address all the digital I/O to slot #1. The remote interface module is always inserted into slot #1 of the digital I/O rack. Slot #2 is the register slot and should be assigned addresses based on the register module residing in that slot.

H. **Register Rack Addressing (Non-CPU Rack)**— Register rack slots are always numbered left to right with slot #1 being the left most slot. The remote interface module resides in slot #1 and in the case of the register racks is not assigned addresses. The register modules are inserted into the slots to the right of the remote interface module. The number of registers are assigned to that slot is dependent on the individual register module requirement.

I. Spare address registers can be assigned to any unused slot number for any drop. The slot does not have to be existing physically. Example, addresses can be assigned to slot #2 (register slot) of a CRK-100 which is a rack without a register slot. These spare addresses will react like internals (relays) until they are used for I/O expansion.

NOTE: Any addresses assigned to drops utilize serial I/O update times as shown in the Local/Remote Interface Instruction Bulletin.

For complete information on rack addressing, refer to the CRT instruction bulletin.

12.0 PROCESSOR TECHNICAL DATA

The following paragraphs provide technical detail which is not required for the typical application of a Model 500 Processor. This information provides an explanation of the internal operation of the processor.

12.1 Memory Utilization

12.1.1 RELAYS

In general, the amount of memory required for relay circuits can be determined by simply counting the number of contacts and coils in each rung. A contact or coil (including latches) and its address number requires just one word of memory. Spaces, branches and connects do not require words of memory. Several sample circuits are shown in the following figures along with the amount of memory required.

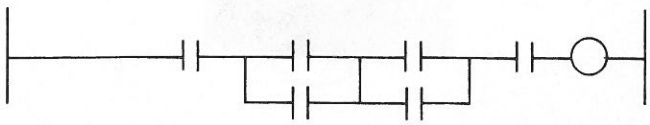

Figure 12.1 — Ladder Diagram Rung with 7 Words

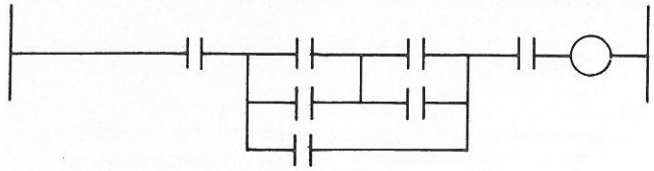

Figure 12.2 — Ladder Diagram Rung with 8 Words

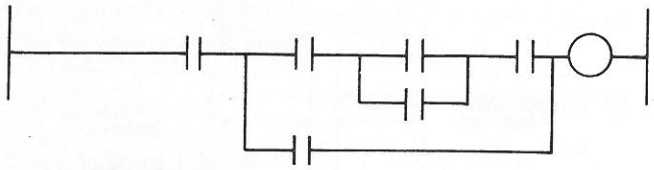

Figure 12.3 — Ladder Diagram Rung with 7 Words

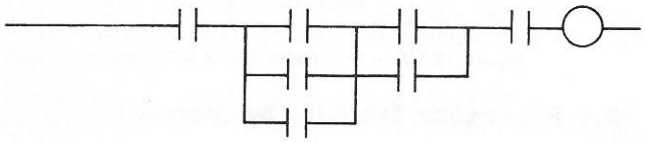

Figure 12.4 — Ladder Diagram Rung with 8 Words

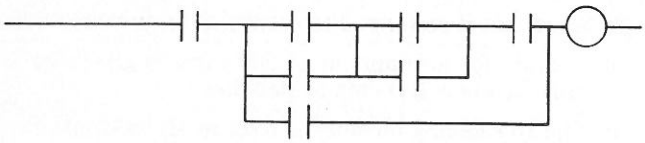

Figure 12.5 — Ladder Diagram Rung with 8 Words

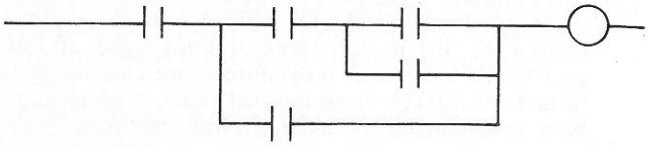

Figure 12.6 — Ladder Diagram Rung with 6 Words

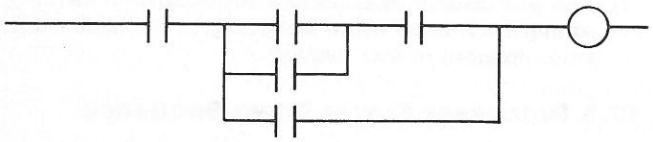

Figure 12.7 — Ladder Diagram Rung with 6 Words

12.1.2 MEMORY USE TABLE

Figure 12.8 lists the amount of memory required for each instruction.

INSTRUCTION	NUMBER OF WORDS
Contact (External)	One
Coil (External)	One
Branch	Zero
Internal Contact or Coil	One
Transitional Coil	Two
Latch/Unlatch Coil	One
Master Control Relay	One
Timer	Seven
Counter	Twelve
Synchronous Shift Register	Nine
Asynchronous Shift Register	Nine
Addition	One
Subtraction	One
Multiplication	One
Division	One
Square Root	One
Binary to BCD	One
BCD to Binary	One
OR	One
AND	One
Exclusive OR	One
If	Two Words + 1 per math function
Let	Two Words + 1 per math function
Print	Four words + 1 per register or 2 Alpha-characters
Read	Five words + 1 per route
Write	Five words + 1 per route
Alarm	Five words + 1 per route
MATRIX (LET)	Five
MATRIX (IF)	Five
GOTO	Three
MARK	Two
GO SUB	Three
ST SUB	Two

Figure 12.8 — Memory Use Table

12.2 Scanning Techniques

The Model 500 Processor scans only the portion of user memory which is utilized by the ladder diagram program. Unprogrammed memory is skipped over. The ladder diagram program is stored in memory beginning at the first word and extending for as many words as required. No gaps will exist in the control program. The scan time for a 1K program of relay ladder logic is approximately 2.6 msec. With the addition of advanced instructions, the memory scan time increases. Refer to Figure 12.9 for approximate execution times or to Appendix A for a more thorough discussion of execution times.

As soon as the processor completes one memory scan, the processor begins to perform its housekeeping tasks. A maximum of 5 msec is allowed at the end of every scan for these tasks. Housekeeping includes servicing the communication ports, updating time bases, performing edit functions such as INSERT, REPLACE, DELETE, as well as SEARCH, DATA ENTER, and FORCE functions and processing internal memory checks. Upon completion of these house-

keeping tasks or at the end of 5 msec, whichever may come first, the processor begins another scan.

I/O status is updated asynchronously from the processor by the Local Interface Module (LI). Actual I/O information is transmitted to and from the external I/O through an image table which actually resides in the LI. Throughput time for updating the image table depends upon the number of I/O being serviced. Refer to Appendix A of the Local/Remote Instruction Bulletin 30598-247-XX for details on LI/RI Update Times.

NOTE: If a programmer or a communicating device is attached to a processor communication port, an additional time delay is imposed on the processor's scan time to update information to the processor. To calculate this additional scan delay, add the 5 msec housekeeping time plus 10% of scan time per port. Example: Scan time without port activity is 40 msec. Scan time with one active is 40 + 5 + (.10 x 40) = 49 msec. Scan time with two ports active is 40 + 5 + (.10 x 40) + (.10 x 40) = 53 msec.

INSTRUCTION	APPROXIMATE EXECUTION TIME
Contact (External)	2.6 µsec
Coil (External)	2.6 µsec
Internal Contact or Coil	2.6 µsec
Latch coil	2.6 µsec
Unlatch coil	2.6 µsec
Compare = ≠ ≥ <	231 µsec + math
Counter	242 µsec
Timer	248 µsec
Master control relay	2.6 µsec
Synchronous shift register	214 µsec + 33 µsec per register
Asynchronous shift register	235 µsec + 38 µsec per register
Addition	85 usec
Subtraction	88 usec
Multiplication	212 µsec
Division	173 µsec
Square Root	269-884 µsec
Binary to BCD conversion	251 µsec
BCD to binary conversion	230 µsec
OR	86 µsec
AND	86 µsec
EXCLUSIVE OR	86 µsec
PRINT	438 µsec + 73/Alpha Pair
WRITE	587 µsec + 30/route
READ	505 µsec + 30/route
ALARM	482 µsec + 30/route
LET	198 µsec + math
MATRIX (LET)	461 µsec + math
MATRIX (IF)	412 µsec + math
GO TO	2.6 µsec
MARK	2.6 µsec
GO SUB	140 µsec
RETURN	100 µsec

Figure 12.9 — Scan Speed of Instructions

12.3 Processor Block Diagram

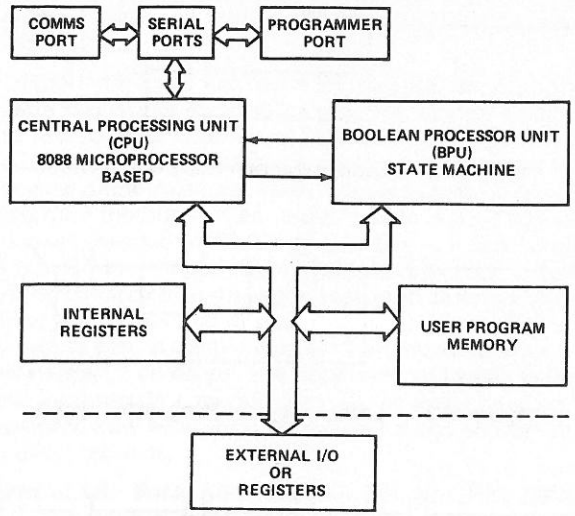

Figure 12.10 — Processor Block Diagram

12.4 Processor Start-Up Sequence

Upon application of AC power to the processor, the following start-up sequence occurs.

1) A signal pulse to turn off external outputs is generated.
2) A self test is performed to determine proper operation.
3) A delay for a minimum of 500 msec is generated in order to allow I/O data to stablilize.
4) The I/O forcing memory is reset in all local interface modules, therefore releasing all forced I/O.
5) Input status is updated.
6) The processor then scans the user memory if the keyswitch is in the DISABLE OUTPUTS or RUN position. During the first memory scan (dummy scan), all outputs which have been programmed are automatically turned off (except those internal outputs which have been programmed as latches). Note that transitional coils solved true will have their transition bit set during the dummy scan, and the history bit set during the first active I/O scan.
7) The processor then continues scanning user memory setting outputs on or off according to the ladder diagram program in user memory.

12.5 Processor Power Down Sequence

When AC power is removed from the system, the processor performs an orderly shutdown procedure, resetting all external outputs to their off state and halting the memory scan.

The system power supply (excluding the Class 8030 Type PS-10 Power Supply) will ride through any power loss or "brown-out" situation of approximately 16 milliseconds, with no interruptions in the operation. After this period of time, the processor shuts down and then restarts upon resumption of power.

12.6 Output Reset Operation

Upon changing the processor keyswitch from any position to either the DISABLE OUTPUTS or RUN position, the following occurs:

1) During the first user memory scan, all outputs which have been programmed are automatically turned off (except those internal outputs which have been programmed as latches).

2) The processor then continues to scan user memory setting outputs on or off according to the ladder diagram program in user memory.

12.7 Internal Circuit & Operational Checks

The processor performs a number of internal diagnostic checks. Among these are:

1) A continuous check made to insure that the internal clock driving the processor logic is fully operational.

2) Each word of user memory incorporates a parity bit. The processor checks each word for proper parity. If an error is detected, the processor halts operation and turns external outputs off. (In this case, the HALT light will flash, and the MEMORY light will be illuminated.) The processor will also halt and illuminate the LED if it scans a memory which is unprogrammed.

13.0 — PROCESSOR CONTROL REGISTERS

13.1 Introduction

The SY/MAX Model 500 Processor operates on a subset of 8,192 SY/MAX Family Processor Registers. These processor registers are separated into two main groups; control registers and data registers. Data registers can be used to represent external I/O, internal relay equivalents or used for data storage.

In addition to the data registers, each SY/MAX Model 500 Processor contains a subset of the 192 control registers reserved for system control functions. Addresses 8001-8192 are reserved in each SY/MAX Processor for these control registers.

The ability to examine and change the contents of these control registers enhances the capability of the Model 500 processor.

Each register consists of 32 bits. Bits numbered 1 through 16 are referred to as the data field and bits numbered 17 through 32 are referred to as the status field. In most cases, the status field is either not alterable or not used.

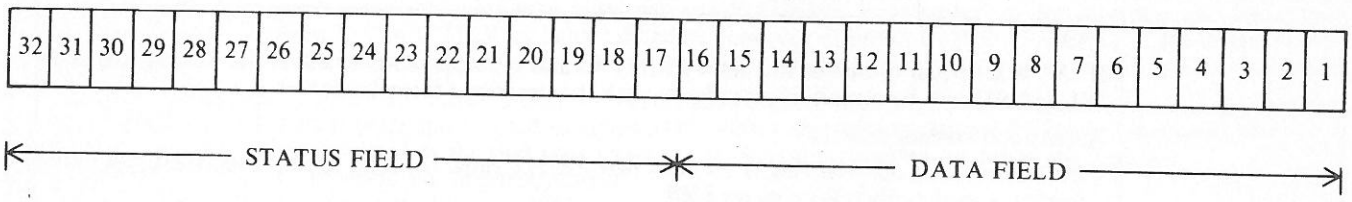

Figure 13.1 — Control Register

The control register addresses can be divided into two groups. Group #1 consists of addresses 8001-8176. Both the data field and status field of group #1 can be examined by the user; however, only the data field can be altered. Group #2 consists of registers 8177-8192. This group is used by the processor for certain "bookkeeping" functions. Only the data field is accessible to the user and can only be examined, not altered.

13.2 Control Register Descriptions

CONTROL REGISTER ADDRESS	DESCRIPTION
8001-8005	These registers may be used to set the format of data being output by the processor when executing PRINT statements. Available formats include ASCII in decimal, hexadecimal or binary, "raw" binary data, and repeated character strings. Refer to CRT instruction bulletin, Section 6.5.6, PRINT OPERATION, for programming information. When a REG element in a PRINT statement is specified from 8001 to 8005, subsequent REG elements will generate characters in accordance with the following: 8001 - Decimal ASCII. Outputs subsequent register values represented as 5 characters plus sign (if negative) or space (if positive). Leading zeros are transmitted as spaces. 8002 - Binary ASCII. Outputs subsequent register values represented as a space followed by the 16 binary ASCII digits (0 or 1). 8003 - Hexadecimal ASCII. Outputs subsequent register values represented as a space followed by the 4 hexadecimal ASCII digits (0 - F). 8004 - Raw binary. Outputs subsequent register values as direct ASCII codes without first being converted to ASCII characters. Data in the storage registers is treated as a pair of 8-bit words (low byte bits 1-8, high byte bits 9-16) ranging from 0 to 65,535 (unsigned). The high byte character is transmitted first, followed by the low byte character. If the contents of the register are a single byte (i.e. 0 to 255) that byte representing a single ASCII 8-bit character will be transmitted; if the contents of the register are a double byte, each of the 2 bytes will be interpreted as a single ASCII character represented by 8 bits, with the high byte transmitted first, followed by the low byte.

CONTROL REGISTER ADDRESS	DESCRIPTION
8001-8005 Cont'd	Example: The user wishes to output a carriage return (CR), line feed (LF), and the number "1". CR is represented by ASCII code 13 (OD hex), LF by ASCII code 10 (OA hex), and "1" by ASCII code 49 (31 hex); thus the user needs to load these codes into the respective high and low bytes of one storage register and the low byte of another (assume for this example reg. 501 and 502). A suggested method would be to multiply the desired high byte (in this case, 13) by 256 and add to this product the value of the desired low byte (10) and store the result (3338) in register 501. Since only a single byte remains, it should get stored directly as the low byte of register 502, e.g. 49. Referring to the example PRINT rung shown below: if "X" = 8004, upon closure of contact 10-8, a CR followed by a LF followed by a "1" will be transmitted out of port 2 at 300 BAUD. This provides the capability to generate any combination of raw ASCII characters necessary to perform cursor positioning, change terminal or printer display attributes, or generate "escape" character sequences. 8005 - Repeated character strings. Treats data in subsequent registers as a pair of 8-bit words, with the low byte representing an ASCII character and the high byte specifying the number of times this character is to be repeated (maximum repeat number is 192). If the high byte = 0, no data is sent. A similar manipulation as described for mode 8004 may be used to load the appropriate high byte and low byte values. Example: The following PRINT statement illustrates how to access the alternate output formats. 10 / -8 — TPRNT 2 — BAUD 300 — STAT S25 — REG X — REG S501 — REG S502 If "X" is set equal to one of the valid PRINT format registers (8001 to 8005) the data in Registers 501 and 502 will be output in accordance with the described formats. Application considerations: - Default mode is decimal ASCII for each **new** PRINT rung, i.e. if no mode is specified, the output format is as described for register 8001. - Once a mode is specified, it remains in effect until a new mode format register (8001 to 8005) is encountered within that statement; thus, more than one mode may be output in the same PRINT statement. - When an ALPHA box is encountered, standard alphanumeric characters are transmitted. - The processor automatically appends a CR and LF at the end of any PRINT box message (except for register 8004, raw binary mode) unless suppressed by a semi-colon (with the exception of mode 8005 when the data being transmitted is a semicolon). - Data is transmitted as a 7-bit ASCII word plus odd parity plus an extra stop bit, except for raw binary mode, which is an 8-bit data word plus even parity. - BAUD rates up to 9.6K are allowed, and should be specified for each new PRINT rung. - If a PRINT rung is programmed to transmit no data, a single NULL (00 hex) will be transmitted.
8006-8140	These registers are not available for use in the Model 500 Processor.
8141-8163	These registers are used to communicate with Local Interface Modules. Each 2-channel Local Interface Module requires up to three processor control registers for communication capability. Each LI requires one register for the control data and control status of each assigned channel along with an error code control register. (Example: The first Local Interface communication register assignments are S8161 (CHNL 2), S8162 (CHNL 1), S8163 (Error)). A description of these particular registers follows.

CONTROL REGISTER ADDRESS	DESCRIPTION
8161	Channel 2 of Local Interface Module (if assigned in Rack Addressing). This register is one of a group of three processor registers (8161, 8162, 8163) necessary for the processor to communicate with the first local interface module. Register 8161 is used to monitor and control the conditions of the remote racks that contain the register modules and I/O connected to channel 2 of this local interface. 1. Bits 32 thru 17 (READ ONLY) may be used only as contacts. 2. Bits 16 thru 1 (READ/WRITE) may be used as contacts or coils. **8161-1 thru 8** The HALT/RUN BIT can be set to force their corresponding drop to shutdown. **8161-9** The FREEZE/RESET BIT allows the user to choose if the channel should freeze or reset when a communication error exists. 1=FREEZE, 0=RESET. **8161-13** The FAILURE OVERRIDE BIT allows the system to continue operation should communication to the remote I/O racks fail. 1=Failure Override Mode, 0=Normal Operation. **8161-15** The AUTO RESTART BIT used in conjunction with S8161-13 allows the system to automatically attempt to re-initialize communication with a remote I/O drop after a communication error has been diagnosed. 1 = Auto Restart ON. 0 = Auto Restart OFF.
8162	Channel 1 of the Local Interface Module (if assigned in Rack Addressing). This register performs the same function as register 8161 does except with regards to Channel 1.
8163	Error code control register for the first local interface. See Appendix B for the error code table.
8164	Increments every 2.5msec. regardless of whether CPU is in RUN or HALT. Full range is over 32 bits, occupying data and status fields, allowing for a maximum accrued time of 4 months. Register resets upon achieving maximum value (rolls over) or upon power-up. Register may also be preset from DATA ENTER or ladder diagram; however, if preset from DATA ENTER, the status field will be set to zero. If used in a LET or IF box in the ladder program, the full 32 bits may be set or compared.
8165	This register can be used in conjunction with a shorted transitional LET rung (safeguard rung) programmed as the first rung (rung no. 1). This rung enables the following features: 1. Program viewing restrictions 2. Communications restrictions 3. Register protection 4. Scan limit 5. Programmable scan interrupt (see Section 14.4.4) Refer to the CRT Programming Instruction Bulletin for further details or refer to Section 10, Memory Access-Security.
8166	Programmable scan-time register. A positive number entered into this register by the user will establish the minimum CPU scan-time with a resolution of 2.5 milliseconds. The CPU will execute the user program, followed by a series of "idle" instructions until the prescribed scan-time is attained. The desired scan-time may be entered in 2.5 msec. increments, rounded up (i.e. entering a value of 98, 99, or 100 would result in a scan-time of not less than 100 nor more than 102.5 msec.), and is subject to an additional period of up to 5 msec. to service the communication port requests. Note this register cannot be used to accelerate the execution time of a given user program; should the actual execution time exceed the fixed scan time, the fixed time is ignored. The user must instead utilize scan control techniques such as GOTO, GOSUB, or TIMED INTERRUPT.
8167	This register contains the programmable scan-time **limit** when the special safeguard (TLET S8165) rung is not used. When the scan-time in msec. exceeds the contents of this register, the processor will HALT with error 970. Maximum allowable scan time limit is 32.765 sec. Default register value is zero, uniquely corresponding to a default scan-time limit of one second. If this register contains a scan time limit in excess of one second (>1000), it will automatically be reset to 0 (i.e. one second) upon power-up. This will not occur if the safeguard rung (TLET S8165, parameter D) is used to preset the scan limit during the initial processor dummy scan. Resolution is within 2.5 msec, rounded up.

CONTROL REGISTER ADDRESS	DESCRIPTION
8168	This register is used to define the time allocated for receiving a message reply to a ladder READ, WRITE, or ALARM statement. The data field is divided into four groups of 4 bits each. Each group contains the user-defined time-out period for an individual channel. The following chart illustrates the channel-to-bit association and provides a table for the possible bit patterns assignable to each of the four groups. All bits are initialized to 0, but are retentive (battery-backed) once the pattern is set by the user.

16	15	14	13	12	11	10	9	8	7	6	5	4	3	2	1
Channel 4 unavailable				Channel 3 unavailable				Channel 2 COMM				Channel 1 PROGRAMMER			

CHANNEL TIME-OUT CODE		TIME-OUT (MSEC)
BINARY	HEX	
0000	0	0 to 250
0001	1	250 to 500
0010	2	500 to 750
0011	3	750 to 1000
0100	4	1000 to 1250
0101	5	1250 to 1500
0110	6	1500 to 1750
0111	7	1750 to 2000

CHANNEL TIME-OUT CODE		TIME-OUT (SEC)
BINARY	HEX	
1000	8	0 to 2
1001	9	2 to 4
1010	A	4 to 6
1011	B	6 to 8
1100	C	8 to 10
1101	D	10 to 12
1110	E	12 to 14
1111	F	14 to 16

Figure 13.2 — Time-Out Bit Pattern Table

When a message is transmitted, the appropriate time-out code for that channel is copied into bits 18 to 21 of the corresponding status register. If a valid reply (bit 16 set) is not received within this specified time-out period, bit 23 will be set. This provides the user with a flag in the event that a ladder-initiated communication has not been completed within the user-defined period of time.

Programming Considerations:

- Bits 1 to 23 in the status register are cleared when the communication rung is solved false.
- If message is not acknowledged at all, ERROR 13 is posted in the status register and a processor communication port error (01110-02190) is sent to Register 8175.
- If an error reply is received, the appropriate error code will be posted in the data field of the status register and bit 23 will also be set.
- If a valid reply is received after a time-out has occurred (and bit 23 has been set), bit 16 will be set and bit 23 will remain latched (until the communication rung is solved false).

EXAMPLE:

A user wishes to know if a certain ladder-initiated message is receiving a reply within one second. The binary bit pattern 0011 should be loaded into the channel group associated with the channel from which the message is being transmitted in Register 8168. If a reply is not received, bit 23 of the status register assigned to the rung will now be set no later than 1 second after the message has been sent (though it may be set any time after 750 msec. has elapsed).

The user must also bear in mind that an error message constitutes a valid reply; thus, bit 23 in this case may be set before the actual time-out period has occurred. Lastly, even though bit 23 has been set due to a time-out, it will remain set even if a reply is received after the time-out has occurred.

Thus, the following bits of the status register assigned to the rung which initiates the message may be monitored to convey the following information:

Bit(s) set	Meaning
16	Valid reply received; message complete (i.e. message "got through" before time-out occurred).
16 and 23	Valid reply received; message complete (i.e. message "got through" **after** time-out occurred).
23	No reply received, time-out has occurred.
1 and 23	Valid error reply received (either before or after time-out occurred). Check data field of status register for error code.

CONTROL REGISTER ADDRESS	DESCRIPTION
8169	Contains the BAUD rate code of the processor communication channels. This register's data field is divided into four groups of 4 bits each. Each group of bits contains the baud rate for an individual port (channel). The following diagram illustrates the channel to bit association and provides a table for the possible bit patterns found in each of the four groups.

16	15	14	13	12	11	10	9	8	7	6	5	4	3	2	1
Channel 4 unavailable				Channel 3 unavailable				Channel 2 COMM				Channel 1 PROGRAMMER			

CHANNEL BAUD RATE CODE		BAUD RATE
BINARY	HEX	
0000	0	50
0001	1	110
0010	2	300
0011	3	1200
0100	4	2400
0101	5	4800
0110	6	9600

NOTE: A CLEAR ALL command will not alter the BAUD rate of Channel 2 unless the processor generated a "CLEAR MEMORY NEEDED".

Figure 13.3 — BAUD Rate Bit Pattern Table

8170	Not currently available for use.
8171	Contains the remainder of the most recent division performed by the ladder diagram.
8172	The number in this register represents (in milliseconds) the processor scan time (i.e. the length of time needed for the processor to scan the user's program).
8173 — End Fence Address 8174 — Begin Fence Address	These registers contain the beginning and ending addresses (as entered by user) of the block of registers accessible via the COMM port. All other registers will be fenced off from this port, and therefore only accessible through the PROGRAMMER port.
8175	This register contains the last ERROR NUMBER which occurred. If there is more than one error, then the most serious will be stored (i.e., the higher the error code, the more serious the error). Additional errors called PROCESSOR COMMUNICATION ERRORS could occur. These errors are associated with a device communicating with the controller: such as CRT, Cartridge tape unit, another controller, etc. These PROCESSOR COMMUNICATION ERRORS are not stored in register 8175 — instead they are sent out to the device which generated the error. (For more information on errors and a complete listing of error codes, refer to Appendix B.)
8176	The individual bits of this register 8176 are used for system monitoring and control. Because it is possible to alter the state of the data field bits, the user has the capability to change specified processor conditions. These bits can be altered thru the CRT programmers DATA ENTER Mode or by a ladder rung in memory. All bits 1 thru bit 16 are alterable. Exceptions to this involve the use of certain memory write protection modes. Refer to Section 10, Memory Access-Security.

16	15	14	13	12	11	10	9	8	7	6	5	4	3	2	1

8176-1 When this bit is set (=1) it prevents the processor from scanning the Ladder program. The processor can be placed in the HALT mode by either putting the processor keyswitch in the HALT position, or by programming and energizing coil 8176-1 in the ladder diagram program. Toggling the keyswitch into and out of HALT or setting and resetting 8176-3 resets this bit.

8176-2 When this bit is set (=1), the processor operates in the DISABLE OUTPUTS mode. The processor can be placed in the DISABLE OUTPUTS mode either by putting the processor keyswitch in the DISABLE OUTPUTS position, or by programming and energizing coil 8176-2 in the Ladder diagram program.

8176-3 This bit operates as a remote HALT/RUN switch. 1=Processor Halts, 0=Processor Runs. Note: The HALT condition overrides the RUN condition (i.e. Keyswitch in HALT or 8176-3=1 will halt the processor. To put the processor in RUN the keyswitch must be in RUN and 8176-3=0)

8176-4 Setting this bit protects user memory from being altered via port 2. 1=memory protect, 0=memory accessible. For further details refer to Section 10, Memory Access-Security.

CONTROL REGISTER ADDRESS	DESCRIPTION
8176 Cont'd	**8176-5** Setting this bit inhibits the forcing of any I/O via port 2. 1=force inhibit, 0=forcing allowed. I/O can still be forced using programming equipment over the programmer port (channel 1). Refer to Section 10, Memory Access-Security. **8176-6** In addition to the fencing capabilities of the processor, setting this bit protects any registers from being altered via the COMM port (registers can still be forced or altered by programming equipment via the PGR port). 1=register protect, 0=register accessible. **8176-7** Not used in the Model 500 Processor System, exclusive to the Model 300. **8176-8** The processor is capable of complex compare functions (i.e. IF S50 = S60 X S70 . . .) If the integer math operation within a compare statement results in a value beyond the processor's capability, an overflow error is indicated by this bit. 1=overflow, 0=valid compare. Bit is reset at the start of each new scan. **8176-9** This bit is set if the processor detects a control register checksum or data storage register error upon power-up. Indicates that all control registers have been set equal to their default values and data storage registers in the processor have been reset to 0. Typically occurs if battery back-up has failed or register data has been corrupted. Bit will be reset by a CLR ALL or DATA ENTER operation. **8176-10** MATRIX overflow bit. Bit is reset at the start of each new matrix rung. **8176-11, 12.** Immediate Communications Update of channels 1 and 2 of the Model 500. When this rung is scanned and solved true, the processor immediately services any pending communication for up to 5msec before continuing to scan the ladder diagram. Bit 11 - Channel 1 Bit 12 - Channel 2 **8716-13, 14.** No used in the Model 500. **8176-15** Preemptive port/route edit lock-out bit. Setting this bit prevents any program editing through any port and route other than that used by the device which initially set the bit. Refer to Section 10.4. **8176-16** Memory Access-Security - This inhibit coil rung may be placed within a main ladder program and/or within subroutines to inhibit alteration, editing or viewing of rungs. Refer to Section 10 for more information on Memory Access-Security. **READ ONLY BITS** **8176-17** This bit will be de-energized as long as the battery is connected and of sufficient voltage to maintain backup of the registers. 1=Battery low, 0=Battery OK **8176-18** "OPEN" This bit is always de-energized. It is used as an "OPEN" in the ladder program on the programmer. **8176-19** "SHORT" This bit is always de-energized. A normally closed contact of this bit is used to display a "SHORT" in the ladder program on the programmer.
8177 Password Register	This register contains a security "Password". If 8177 = 0 then any value in register 8178 is ignored and has no effect. If 8177 is non-zero, then 8178 controls editing, forcing, and register write access. When reading the value in register 8177, if value is zero then zero will be displayed. If it contains a "Password" (non-zero value), -1 (decimal) will be displayed. See Section 10 for more information.
8178 Restriction Register	Depending upon the bit pattern in 8178, communications, forcing, register writing, and editing or altering the ladder program may be restricted from specified communication ports. The CLEAR ALL command is always allowed from channel 1. See Section 10 for more information.
8179-8180	These registers are not used by the processor.
8181-8182	These registers contain the memory size (in bytes).
8183	Secondary error when register 8175 contains a higher error number.
8184	This register contains the memory location being executed when error was incurred.
8185	The binary number contained in this register represents the number of racks defined in the Rack Addressing mode.

CONTROL REGISTER ADDRESS	DESCRIPTION
8186	The individual bits of this register are used for "flagging" certain processor conditions. These bits can be examined but cannot be altered by any means. **8186-1** The HALT/RUN status of the processor is represented by this BIT. 1=HALT (Processor Halt light flashing), 0=RUN or DISABLE OUTPUTS. **8186-2** This BIT is energized when the processor is scanning the user program but the outputs are disabled. 1=DISABLE OUTPUT (Processor Run light flashing), 0=HALT or RUN. **8186-3** When this BIT is energized, this indicates that the processor is in the RUN mode. 1=RUN (Processor Run light on steady), 0=HALT or DISABLE OUTPUTS. **8186-4** When this BIT is energized, this indicates that an error has been detected in user memory (Memory light on), 0=Memory light OFF, 1=Memory light ON. **8186-5** This BIT is energized when some device is forcing inputs or outputs on or off through either the PROGRAMMER port or COMM port (Force light on or flashing), 0=No Forcing, 1=Forcing. **8186-6** After the processor sends update status to an output or internal register, it reads that status to insure a proper transmission. This BIT is energized when the data read from an output or register does not match the data written into it (i.e. read after write error). 1=Read after write error (I/O error light on), 0= Transmission valid. **8186-7** This BIT represents the physical status of the processor keyswitch and will be energized when the keyswitch is in the HALT position. 1=Keyswitch in HALT, 0=Keyswitch not in HALT. **8186-8** This BIT represents the physical status of the processor keyswitch and will be energized when the keyswitch is in the DISABLE OUTPUTS position. 1=Keyswitch in DISABLE OUTPUTS, 0=Keyswitch not in DISABLE OUTPUTS. [Note: The remaining BITS in register 8186 are reserved for internal use by the processor.]
8187	This register contains the number of rungs entered into memory by the user.
8188	The number contained in this register represents the processor type and firmware revision. The three most significant digits represent the Type number (refer to paragraph 6.0) and the least significant digit represents the firmware revision. Example: A Model 500 version 2K RAM processor with firmware revision number 7 would have the number 5217 in this register.
8189-8190	These registers contain the memory size (in bytes). Bits 9 through 16 of 8189 contain the number of bytes per word defined for the processor.
8191-8192	Memory used (in bytes).

14.0 — ADVANCED INSTRUCTION SET

14.1 Introduction

This appendix provides a brief summary of the advanced instruction set that is supported by the Model 500 processor. An introduction as well as a general description of each instruction exclusive to the Model 500 processor is provided. These advanced instruction capabilities include: matrix operations, scan control, and the immediate communication update function. Also included is a description of the operation of the Model 500's asynchronous (FIFO) shift register instruction which differs slightly from that of the Model 300 processor.

14.2 Matrix LET Instructions

A matrix is defined as a group of consecutive registers. The general format of a matrix LET instruction is shown in Figure 14.1. A matrix LET instruction can contain a matrix on one or both sides of the equal sign.

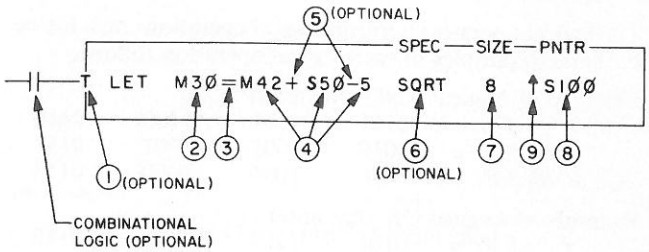

Figure 14.1 — Matrix LET Instruction

The matrix LET instruction is programmed as a horizontal box with the word LET as the first entry in the box. The other entries appearing in the LET box are explained as follows:

1. If desired, a matrix LET operation can be programmed to be transitional (operate only once on each open to closed transition of the preceding combinational logic). If the LET operation is **not** transitional, the operation will be performed on each scan of processor memory (assuming the preceding combinational logic is closed).

2. The first entry to the right of the word "LET" must be either the letter "M" (indicating matrix) followed by the address of the first register in the matrix or the letter "S" (indicating a storage register) followed by the register address.

3. The equal (=) sign must appear in this position of the LET box.

4. The entry to the right of the equal (=) sign can be any of the following:
   M — This indicates a matrix of registers. The letter "M" must be followed by the address of the first register used in the matrix.
   S — This indicates a single register. The letter "S" must be followed by the storage register address number.

   CONSTANT — A constant value may be entered (-32,768 to +32,767).

NOTE: To enter a negative number into a storage register, place a zero (0) after the equal sign and subtract the corresponding number from it, e.g. LET S40 = 0-8297. This will enter -8297 into storage register S40.

5. Any combination of mathematical or logical operators may be used to create an expression. These operators are optional. If desired, only a single entry (M, S, or CONSTANT) can appear to the right of the equal sign. Some of the available operators and associated LET box symbols follow:

MATHEMATICAL OPERATOR	SYMBOL IN LET BOX
Addition	+
Subtraction	−
Multiplication	×
Division	÷

LOGICAL OPERATOR	SYMBOL IN LET BOX
AND	∧
OR	∨
Exclusive OR	⊕

The logical operators perform logical operations on a bit-by-bit basis. Examples of each logical operation follows:

Example of Logical AND Operation

S30 =	0101	1101	1100	0110
S40 =	1010	1001	1001	0111
S30 AND S40 =	0000	1001	1000	0110

Example of Logical OR Operation

S30 =	0101	1101	1100	0110
S40 =	1010	1001	1001	0111
S30 OR S40 =	1111	1101	1101	0111

Example of Exclusive OR

S30 =	0101	1101	1100	0110
S40 =	1010	1001	1001	0111
S30 XOR S40 =	1111	0100	0101	0001

6. Any optional special function may be entered into the LET box. Some of the available special functions are listed below:

DESCRIPTION OF FUNCTION	FUNCTION AS APPEARS IN LET BOX
BCD to Binary Conversion	BIN
Binary to BCD Conversion	BCD
Square Root	SQRT
Absolute Value	ABS

NOTE: The square root instruction (SQRT) returns an integer value as the result of performing a square root operation on either constant data or data that is contained in a storage register. Any decimal remainder from the operation is truncated from the stored value. As an example, the square root of the number 3 would return a result of 1.

7. This entry determines the size of the matrix. This value specifies how many consecutive registers, starting with the register addresses preceded by an "M", will be used in the matrix operation. For example, in Figure 14.1 the SIZE is eight, thus the registers in each matrix will be as follows:

MATRIX	REGISTERS IN THE MATRIX
M30	30 through 37
M42	42 through 49
M50	50 through 57

8. This entry is the matrix operation POINTER register. The value in this register indicates which register within a matrix is being operated upon. When the value in the POINTER register is one, the operation was performed on the first register in the matrix. The value of the POINTER register can never exceed the matrix size. The operation of the POINTER register is dependent upon the prefix used. See the following for a description of the different prefixes available and how these affect the POINTER register and the matrix operation.

9. The entry immediately preceding the POINTER register is the prefix. The prefix determines the specific operation of the LET box. The three possible prefixes and the resulting LET box operations, are as follows:

Level (No Prefix) LET

If no prefix is specified, the LET operation is performed using a single register from each of the matrices in the box. The registers which will be used in the operation are specified by the value in the POINTER register. For example, if the value in the POINTER register is three, the LET operation will be performed using the third register in each matrix. If the value in the POINTER register is zero, no operation is performed.

To utilize this type of matrix operation, the user must load a value into the POINTER register before the matrix LET operation is performed. This can be accomplished using another LET instruction, a COUNTER, a TIMER, etc. The following example demonstrates this type of matrix LET instruction which has no prefix.

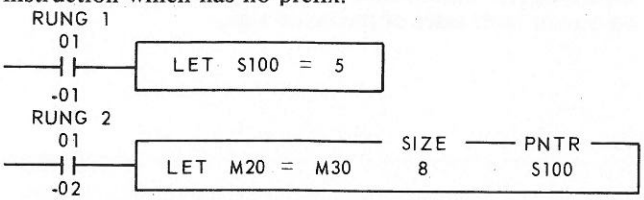

Figure 14.2 — Level Matrix LET Operation

Circuit Operation:
Assume both contacts, 01-01 and 01-02, are closed. In rung one the value five will be entered into register S100. In rung two, the fifth register of the matrix (POINTER register S100 = 5) will be used in the LET operation. Thus, the operation S24 = S34 will be performed.

Level (No Prefix) Transitional LET

The level transitional LET instruction works identical to the level LET with the exception that the operation will only be performed upon the open to closed transition of the preceding contacts.

Incremental (" + " Prefix) LET

When the "+" prefix is specified in a LET, the POINTER register will be incremented once per memory scan and the LET operation will be performed using a single register from each matrix. The registers which will be used in the operation are specified by the value in the POINTER register. When the contact preceding the LET is opened, the POINTER register will be cleared. The following example demonstrates this type of matrix LET operation.

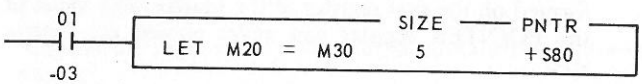

Figure 14.3 — Incremental Matrix LET Operation

Circuit Operation:
Assume contact 01-03 is closed. Upon each scan of the processor memory, the following will occur.

PROCESSOR SCAN NUMBER	VALUE OF POINTER REGISTER	LET OPERATION
1	1	S20 = S30
2	2	S21 = S31
3	3	S22 = S32
4	4	S23 = S33
5	5	S24 = S34
6	5	NONE

To perform the LET operation again, contact 01-03 must open and close again.

Incremental (" + " Prefix) Transitional LET

When the "+" prefix is specified in a transitional LET, the POINTER register will increment only on the open to closed transition of the combinational logic preceding the LET and the operation will be performed using a single register from each matrix. The registers which will be used in the operation are specified by the value in the POINTER register. Note that this will occur upon each open to closed transition. When the combinational logic is open, the value in the POINTER register is **not** set to zero, as happens with non-transitional LET operations. The POINTER **must** be originally set to a value or reset to zero by using another LET instruction or register from another instruction such as a COUNTER or TIMER. The following example demonstrates this type of matrix LET operation.

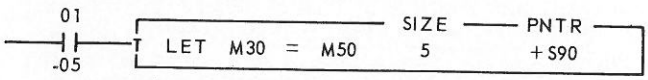

Figure 14.4 — Incremental Transitional LET Operation

Circuit Operation:
Assume, as part of the program, the POINTER register is set to zero. Upon the first open to closed transition of contact 01-05, the LET operation S30 = S50 will be performed. Upon the next open to closed transition, the LET operation S31 = S51 will be performed. This will continue until the fifth open to closed transition, when the operation S34 = S54 will be performed. At this point, further transitions of contact 01-05 will have no affect on the LET operation. To repeat the operation the POINTER register must be set to zero by another rung in the program.

Repeat (" ↑ " Prefix) LET

When the " ↑ " prefix is specified, the LET operation will be performed using each register of the matrices. The entire matrix will be operated upon in a single memory scan. The value in the POINTER register will equal the SIZE when the operation is completed. The following example describes the operation of the repeat LET.

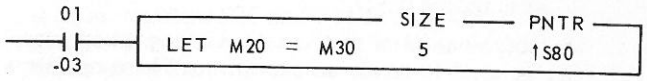

Figure 14.5 — Repeat Matrix LET Operation

Circuit Operation:

Providing contact 01-03 is closed, the following LET operations will be performed in a single memory scan.

S20 = S30
S21 = S31
S22 = S32
S23 = S33
S24 = S34

Repeat (" ↑ " Prefix) Transitional LET

The repeat transitional LET operates identical to the repeat LET with the exception that the LET operation will only be performed on the open to closed transition of the preceding combinational logic.

14.3 Matrix IF Instructions

A matrix is defined as a group of consecutive registers. The general format of a matrix IF instruction is shown in Figure 14.6. A matrix IF instruction can contain a matrix on one or both sides of the comparison symbol.

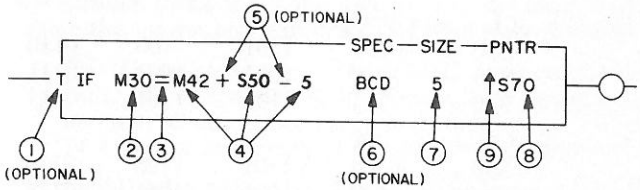

Figure 14.6 — Matrix IF Instruction

The matrix IF is programmed as a horizontal box with the word IF as the first entry in the box. The other entries in the box are explained as follows:

1. If desired, an IF instruction can be programmed to be transitional (operate only once on each open to closed transition of the preceding combinational logic). If the IF instruction is **not** transitional, the instruction will be executed on each scan of processor memory (assuming the preceding combinational logic is closed).
2. The first entry to the right of the word "IF" must be either the letter "M" indicating matrix operation, followed by the address of the first register used in the matrix or the letter "S" followed by the address of a single register.

3. The comparison symbol must appear here. The comparison can be equal to (=), not equal to (≠), less than (<) and greater than or equal to (≥).

4. The entry to the right of the comparison symbol can be any of the following.

   M — This indicates a matrix of registers. The letter "M" must be followed by the address of the first register used in the matrix.

   S — This indicates a single register. The letter "S" must be followed by a storage register address number.

   CONSTANT — A constant value may be entered (-32,768 to +32,767)

NOTE: To compare against a negative value, subtract the value from zero. i.e. to compare against -327, compare against 0-327.

5. Any combination of mathematical or logical operators may be used to create an expression. These operators are optional. If desired, only a single entry (M, S, or CONSTANT) can appear to the right of the comparison symbol. Some of the available operators and associated IF box symbols follow.

MATHEMATICAL OPERATOR	SYMBOL IN IF BOX
Addition	+
Subtraction	-
Multiplication	x
Division	÷

LOGICAL OPERATOR	SYMBOL IN IF BOX
AND	∧
OR	∨
Exclusive OR	⊕

The logical operators perform logical operations on a bit-by-bit basis. Examples of each logical operation follows:

Example of Logical AND Operation

S30 =	0101	1101	1100	0110
S40 =	1010	1001	1001	0111
S30 AND S40 =	0000	1001	1000	0110

Example of Logical OR Operation

S30 =	0101	1101	1100	0110
S40 =	1010	1001	1001	0111
S30 OR S40 =	1111	1101	1101	0111

Example of Exclusive OR

S30 =	0101	1101	1100	0110
S40 =	1010	1001	1001	0111
S30 XOR S40 =	1111	0100	0101	0001

6. Any optional special function may be entered into the IF box. Some of the available special functions are listed below:

DESCRIPTION OF FUNCTION	FUNCTION AS APPEARS IN IF BOX
BCD to Binary Conversion	BIN
Binary to BCD Conversion	BCD
Square Root	SQRT
Absolute Value	ABS

NOTE: The square root instruction (SQRT) returns an integer value as the result of performing a square root operation on either constant data or data that is contained in a storage register. Any decimal remainder from the operation is truncated from the stored value. As an example, the square root of the number 3 would return a result of 1.

It is recommended that the square root instruction (SQRT) not be used in a compare operation.

7. This entry determines the size of the matrix. This value specifies how many consecutive registers, starting with the register addresses preceded by an "M", will be used in the matrix operation. For example, in Figure 14.6 the size is five, thus the registers in each matrix will be as follows:

MATRIX	REGISTERS IN THE MATRIX
M30	30 through 34
M42	42 through 46
M50	50 through 54

8. This entry is the matrix operation POINTER register. The value in this register indicates which register within a matrix is being operated upon. When the value in the POINTER register is one, the operation was performed on the first register in the matrix. The value of the POINTER register can never exceed the matrix size.

   The operation of the POINTER register is dependent upon the prefix used. See the following for a description of the different prefixes available and how these affect the POINTER register and the matrix operation.

9. The entry immediately preceding the POINTER register is the prefix. The prefix determines the specific operation of the IF box. The two possible prefixes and the resulting IF box operations are as follows:

Level (No Prefix) IF

If no prefix is specified, the IF instruction is performed using a single register from each of the matrices in the box. The registers which will be used in the operation are specified by the value in the POINTER register. For example, if the value in the POINTER register is three, the IF operation will be performed using the third register in each matrix. If the value in the POINTER register is zero, no operation is performed.

To utilize this type of matrix operation, the user must load a value into the POINTER register before the matrix IF operation is performed. This can be accomplished using a LET instruction, a COUNTER, a TIMER, etc. The following example demonstrates this type of matrix IF instruction.

NOTE: An IF instruction with no prefix cannot be programmed as transitional, resulting in error number 05 displayed on the programmer.

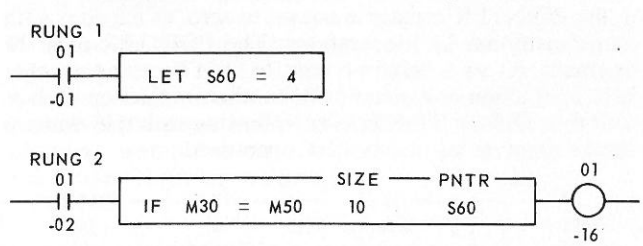

Figure 14.7 — Level Matrix IF Operation

Circuit Operation:

Assume both contacts, 01-01 and 01-02, are closed. In rung one, the value four will be entered into register S60. In rung two, the fourth register of each matrix (POINTER register

S60 = 4) will be compared for equality. If the values are equal (IF S33 = S53), coil 1-16 will turn ON.

Repeat ("↑" Prefix) IF

When the "↑" prefix is specified, the POINTER register will be automatically incremented to compare the registers of the matrices. If the comparison is not true for all registers in the matrices, the output will turn OFF, and the POINTER register is set equal to the size. If the comparison is true for any registers in the matrices, the output will turn ON for one memory scan and the POINTER register will "point" at the first register in the matrix for which the comparison is true. Upon the next scan of the rung, the POINTER register will be reset and the operation will repeat.

The following example demonstrates the operation of a repeat IF instruction.

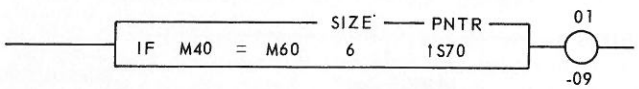

Figure 14.8 — Repeat Matrix IF Instruction

Circuit Operation:

Assume the registers in each matrix contain the following values:

S40 = 300	S60 = 410
S41 = 50	S61 = 65
S42 = 101	S62 = 101
S43 = 305	S63 = 270
S44 = 6	S64 = 12
S45 = 5	S65 = 5

When the IF box is executed, the value in S40 is compared to S60, S41 is compared to S61, S42 is compared to S62, etc. Because the matrix comparison is true for at least one register comparison, the output 1-9 will turn ON. (The output will only turn OFF when all the comparisons in the matrices are false.) The POINTER register will then "point" to the first comparison in the matrices which is true. In this example S42 = S62 is the first, thus the value in the POINTER register will be three (S42 and S62 are the third registers in each matrix).

If desired, the POINTER register value can be examined by successive rungs in the program.

Repeat ("↑" Prefix) Transitional IF

When the "↑" prefix is specified in a transitional IF, and the preceding contacts make a transition from open to closed, the POINTER register will be automatically incremented to compare the registers of the matrices. If the comparison is not true for all registers in the matrices, the output will turn OFF, the POINTER register will be set equal to the SIZE. If the comparison is true for any registers in the matrices, the output will turn ON for one scan and the pointer will "point" at the comparison in the matrices which is true. Upon the next combinational logic transition, the pointer will be incremented and "point" at the next registers in the matrices for which the comparison is true. This process will continue for each transition until the pointer value is equal to the size at which time the pointer will stop incrementing and the output will turn OFF. The process can be repeated by setting the POINTER register to zero and opening and closing the preceding combinational logic. The following example, demonstrates the operation of this type of rung.

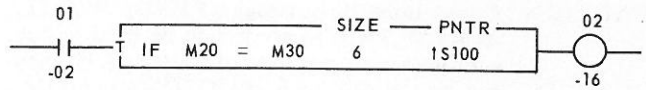

Figure 14.9 — Repeat Transitional IF

Circuit Operation:

Assume the matrices contain the following values:

S20 = 5	S30 = 10
S21 = 12	S31 = 12
S22 = 41	S32 = 43
S23 = 25	S33 = 25
S24 = 32	S34 = 30
S25 = 80	S35 = 82

Upon closure of contact 01-02, the IF box will begin to compare each register of the two matrices. The comparisons will stop when two registers are found to be equal. In this example, registers S21 and S31 are equal. The POINTER register will contain the value two and the output will turn ON for one scan.

Upon the second transition of contact 01-02, the POINTER will automatically increment until another comparison is found true. In this example, S23 = S33 is the next true comparison. The POINTER register will equal four and the output will turn ON for one scan.

On the third transition of contact 01-02, the POINTER will automatically increment until another comparison is found true. Because there are no more comparisons in the matrix which are true, the pointer will increment until it is equal to the size (=6) and the output will turn OFF.

The IF operation will not be performed again until the POINTER register is reset to zero and contact 1-02 is opened and closed again.

14.4 Processor Scan Control

14.4.1 INTRODUCTION

The typical method for processor memory scan is to sequentially scan (execute) each rung in the memory. This is the method used by the Model 100 and Model 300 processors. Typically, this is also how the Model 500 processor scans memory. However, the Model 500 incorporates three instructions which allow the user to alter the sequence in which the control program is scanned. They are:

1. GOTO Instruction — The GOTO instruction will cause the program to jump directly from one rung to another, skipping any rungs in between. See Section 14.4.2 for a description of the GOTO instruction.
2. GOSUB Instruction — The GOSUB instruction will cause the program to jump from one rung to another, execute a group of rungs, and then return to the rung which immediately follows the GOSUB rung. The group of rungs is commonly referred to as a subroutine, thus the name GOSUB (GO to SUBroutine). See Section 14.4.3 for a description of the GOSUB instruction.
3. TIMED INTERRUPT — The timed interrupt method of scan control will interrupt the program at a specified time and execute a certain group of rungs (subroutine) and will then return to the main program. See Section 14.4.4 for a description of the timed interrupt.

CAUTION: Communication rungs (READ, WRITE, ALARM, PRINT) are not to be used within subroutines or portions of ladder which may not be scanned, such as GOTO's around ladder rungs because the communication may not take place and the port may lock up.

14.4.2 GOTO INSTRUCTION

Introduction and General Description

The GOTO instruction is used to jump directly from one rung to another rung, skipping all rungs in between. The GOTO method of scan control consists of a GOTO instruction, which includes a unique number, and a location marker known as a MARK instruction which also uses the same unique number as the GOTO. The program may contain multiple GOTO and associated MARK instructions.

When the rung containing the GOTO is executed and the rung is solved true, the control program will immediately jump to the MARK with the same number as the GOTO. The following example demonstrates this operation:

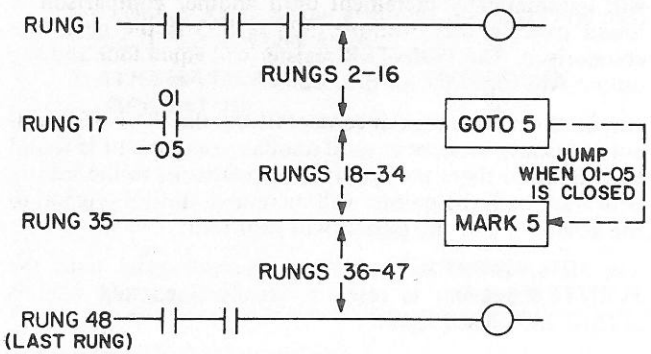

Figure 14.10 — Operation of the GOTO Instruction

Circuit Operation:

When contact 01-05 is open the processor will sequentially scan the entire program. When contact 01-05 is closed, the processor will sequentially scan rungs 1 through 17 and will then skip rungs 18 through 34 and scan rungs 35 through 48. This operation will continue each scan until contact 01-05 is opened.

14.4.3 GOSUB INSTRUCTION

Introduction and General Description

The GOSUB instruction will cause the program to jump from one rung to another, execute a group of rungs and then return to the rung which immediately follows the GOSUB rung. The group of rungs executed out of sequence is commonly referred to as a subroutine, thus the name GOSUB (GO to SUBroutine).

The GOSUB method of scan control consists of:

1. a GOSUB instruction, which includes a unique number
2. a location marker known as a MARK which includes the same unique number
3. a RTN (return) instruction also incorporating the same unique number.

The MARK and RTN instructions are used to designate the bounds of a group of rungs (subroutine) which will be executed when the rung containing the corresponding GOSUB is solved true. The MARK must be the first rung in the subroutine, while the RTN must be the last rung. When the RTN rung is executed, the program will return to the rung which immediately follows the GOSUB rung.

To implement this method of scan control, the control program must be separated into two areas; the ladder program area and an area which contains all the subroutines. The MARK ST. SUB (STart SUBroutine area) is a special instruction which is programmed by the user to separate these two areas of the program. All subroutines must be programmed after the rung containing the MARK ST. SUB.

CAUTION: The rungs programmed after the MARK ST. SUB will never be scanned by the processor unless a GOSUB instruction causes the program to jump there.

The following example demonstrates the use of the GOSUB instruction.

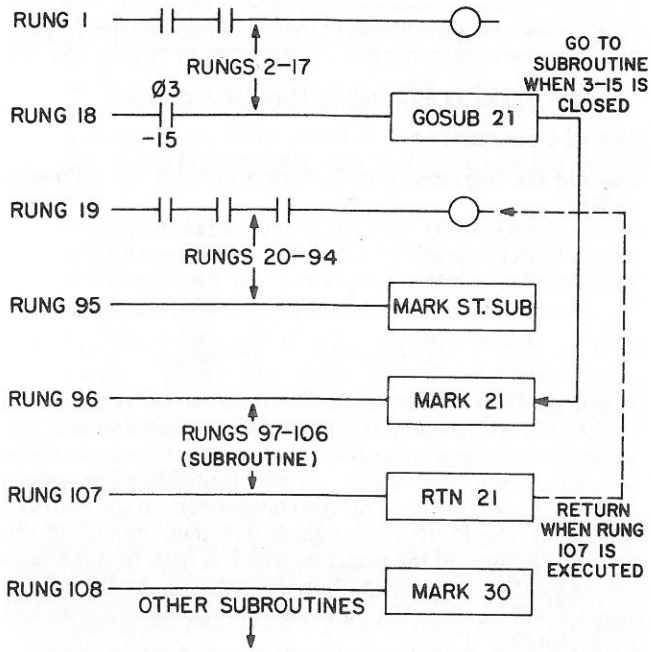

Figure 14.11 — Operation of the GOSUB Instruction

Circuit Operation

When contact 03-15 in rung 18 is open, the processor will scan rungs 1 through 95. When contact 03-15 is closed, and rung 18 is executed, the program will jump to rung 96 and continue executing rungs in subroutine 21. When the RTN rung 107 is executed, the program will return to rung 19 in the main program and execute the remainder of the program (rungs 19-95).

14.4.4 TIMED INTERRUPT SCAN CONTROL

Introduction and General Description

The timed interrupt method of scan control will interrupt the program after a specified amount of time and execute a certain group of rungs (a subroutine) and will then return to the main program. This method of interrupt is useful in applications where certain inputs or data must be continuously sampled within a particular time limit. Subroutine number 8190 is reserved especially for the timed interrupt subroutine. Thus, MARK 8190 and RTN 8190 are used for this subroutine (See Section 14.4.3 for a description of subroutines).

To utilize the timed interrupt, an interrupt rate value and an interrupt tolerance value must be specified. The interrupt tolerance value and the interrupt rate value are entered into the processor using an unconditional transitional LET instruction which utilizes Control Register 8165. The TLET rung **must** be the first rung in memory. Figure 14.12 shows such a TLET instruction. Note that the rung cannot use inputs.

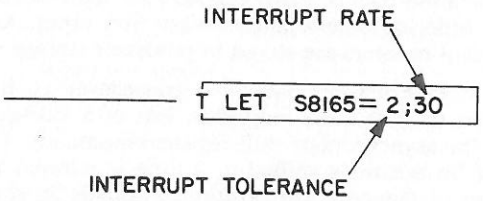

Figure 14.12 — TLET Instruction Used to Enter Interrupt Rate and Interrupt Tolerance

NOTE: Even though registers 8165 and 8166 are referenced, the interrupt tolerance and rate values are not actually stored in registers 8165 and 8166 but are maintained in a processor location not accessible by the user.

The values entered for rate and tolerance specify intervals of 2.5 milliseconds. For example, the TLET instruction in Figure 14.12 specifies a tolerance of 5 ms (2 X 2.5) and a rate of 75 ms (30 X 2.5). The values allowed for tolerance are 1 to 32,767 (2.5 ms to 82 seconds) while the values allowed for rate are 3 to 32,767 (7.5 ms to 82 seconds).

The interrupt rate value specifies the rate at which the interrupt will occur, and hence the rate at which the timed interrupt subroutine will be executed. However, it may not always be possible to interrupt the processor scan precisely at the interrupt rate. For example, the processor cannot be interrupted while scanning a rung or while performing end-of-scan tasks. The interrupt can only occur between the scanning of rungs. The interrupt tolerance specifies the margin for error allowed before jumping to the timed interrupt subroutine, and thus must not be less than the execution time of the longest rung. For example, if the rate is 30 ms and the tolerance is 5 ms, the maximum time allowed between execution of the interrupt subroutines is 35 ms. If the subroutine is **not** executed within 35 ms of the preceding subroutine, the processor will halt and error number 29102 will appear in the error status register.

Once the interrupt parameters are established, the program will continually be interrupted at the specified rate (or worst case at rate + tolerance) and the interrupt subroutine will be executed. It should be noted that the interrupt rate time includes the time necessary to execute the interrupt subroutine. For example, if the rate is 100 ms, and the interrupt subroutine takes 10 ms to execute, the main program will be scanned for 90 ms before the next interrupt occurs. For this reason, the interrupt subroutine should be kept as short as possible. If the time to execute the subroutine exceeds the interrupt rate, error 29100 will be indicated next to the ERROR NUMBER in the CPU/STATUS mode of the CRT, while error 29101 indicates the MARK/RTN 8190 subroutine has not been properly programmed.

CAUTION: When timed interrupts are programmed and the processor is in RUN, forced I/O cannot be released by the FORCE CLEAR ALL command, by disconnecting the programmer, nor by removing power from the programmer. These methods will release forced I/O when the processor is in HALT. Forced I/O can be released individually while the processor is in RUN or HALT.

NOTE: Programming in the RUN mode is not allowed when the timed interrupt is enabled.

CAUTION: The timed interrupt instruction in all pre-series H Model 500 processors contain certain programming and operational characteristics which make us recommend that this instruction **not** be used. If you intend to use the timed interrupt instruction, contact your local Square D field representative for procedures to obtain an update to allow the use of this instruction.

The following description demonstrates the operation of the timed interrupt.

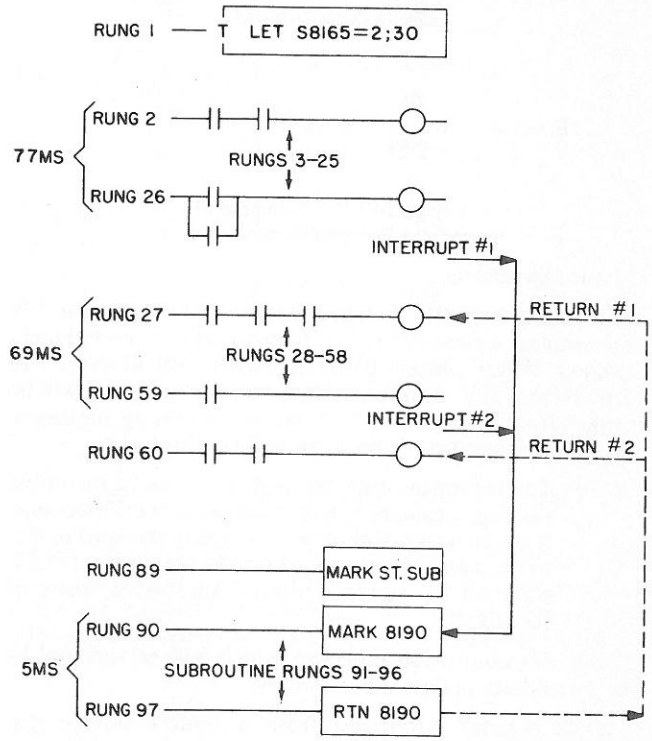

Figure 14.13 — Operation of the Timed Interrupt

Circuit Operation

Rung 1 sets the tolerance to 5 ms (2 X 2.5) and the rate to 75 ms (30 X 2.5). Assume that the first interrupt occurs during the execution of rung 26, and rungs 2 through 26 take 77 ms to execute. Then the first interrupt will occur between rungs 26 and 27. The program will then execute the interrupt subroutine starting at rung 90. Upon executing the return (RTN) in rung 97, the program will return to rung 27.

Note that the interrupt subroutine takes 5 ms to execute. Thus, after returning to rung 27, there are only 68 ms left until the next interrupt. The next interrupt is therefore scheduled to occur within a 68 to 73 ms window. Assuming rungs 27 through 59 take 69 ms to execute, the second interrupt will occur after rung 59 is executed. The interrupt subroutine will then be executed again after which the program will return to rung 60. This type of operation will continue throughout the remainder of the program and during successive scans of memory.

14.5 Immediate Communications Update

Ordinarily, when a communication is received from a remote device (i.e. another processor or D-LOG Module) the

data received is not examined by the processor until the end of scan. In some applications, it may be desirable to examine the data immediately. The Model 500 processor has two special bits which, when turned ON, will immediately examine a processor port for incoming communications.

Bits 8176-11 and 8176-12 are used for the immediate communications update. When bit 8176-11 is turned ON, port 1 of the processor will be immediately updated. When bit 8176-12 is turned ON, port 2 of the processor will be immediately updated. To turn these bits ON, simply program these addresses as coils of a rung. For example:

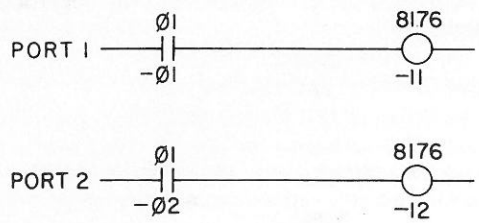

Figure 14.14 — Example of Immediate Communications Update

Circuit Operation:

When contact 01-01 is closed, coil 8176-11 will turn ON and communications received in port 1 will be immediately updated. When contact 01-02 is closed, coil 8176-12 will turn ON and any communications received in port 2 will be immediately updated. If there are no incoming messages, for the designated port, the scan will continue.

NOTE: The maximum time allowed to service an incoming message can vary between 2.5 and 5.0 milliseconds. If the message cannot be completely serviced in this time, scan will continue and the message will continue to be serviced during successive scans of memory.

Those communication messages which will be serviced by the immediate update are as follows:

- Write register command from a remote device (i.e. WRITE or ALARM rung from a remote processor)
- Read register command from a remote device (i.e. READ rung from a remote processor)
- The status information returned from a remote device after the local processor has executed WRITE or ALARM rung.
- The data requested by a READ rung in the local processor.

14.6 Asynchronous Shift Register (FIFO)

14.6.1 INTRODUCTION AND GENERAL DESCRIPTION

The Model 500 processor's asynchronous (FIFO) shift register operates slightly different from that of the Model 300 processor. The basic concept and instruction box format remains the same but the operating parameters have been changed somewhat. This section will explain these changes as well as provide a brief explanation of the asychronous shift register.

Asychronous (FIFO) shift registers are used to record the order of events as they take place. For example, in alarm annunciation panels, FIFO registers are used to keep track of the order of system failures when they occur. Asynchronous shift registers are stored in processor storage registers.

Each storage register data field consists of 16 bits. It is possible to shift these individual bits of a storage register using the asynchronous shift register commands. The number of bit positions shifted at a time is referred to as the number of channels. The positions available for shifting are referred to as zones.

$$\frac{\text{Total number of Bits}}{\text{Number of Channels}} = \text{ZONES}$$

A FIFO is a stack of zones each consisting of a number of channels. Figure 14.15 shows an example of a five zone, eight channel FIFO stack.

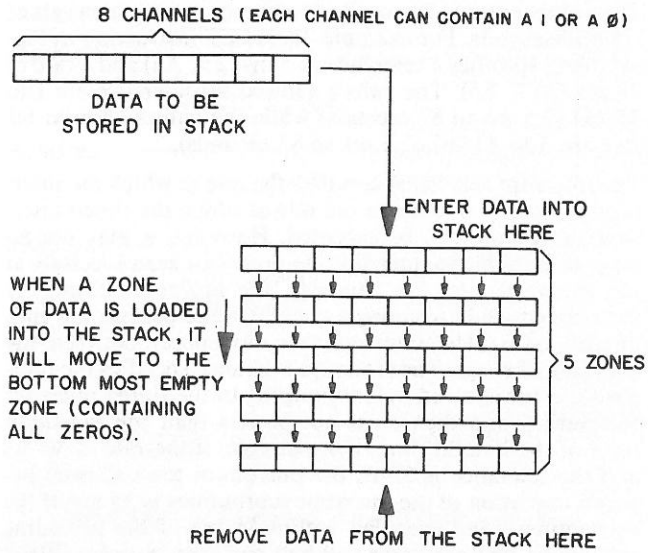

Figure 14.15 — Five Zone, Eight Channel FIFO Stack Operation

Both the Model 300 and 500's FIFO instruction allow for the data to be entered at the top of the FIFO stack, then it falls to the last cleared zone of the shift register (Figure 14.16). By taking information from the bottom of the stack, First In-First Out data storage is performed.

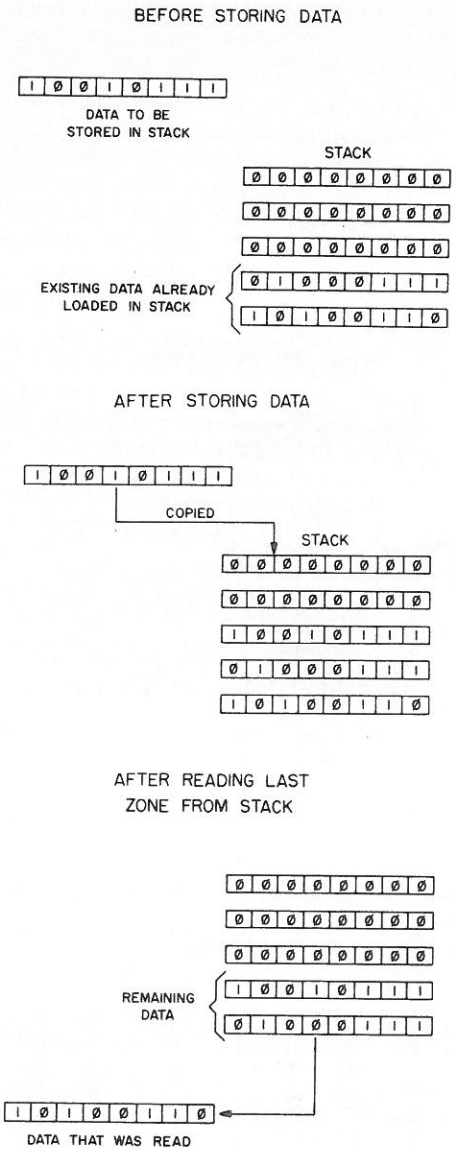

Figure 14.16 — FIFO Stack Results

A discussion of the difference between the operation of Model 300 and Model 500 processor's asynchronous shift register begins at this point. In the case of the Model 300 processor, the last zone used in the FIFO instruction is also the last zone of the stack. (The first item of data to be shifted into an empty stack falls to the last zone.) Unlike the Model 300 FIFO, the Model 500 FIFO uses the second to the last zone as the bottom of the stack and uses the last register as the DATA-OUT zone. Figure 14.17 illustrates the difference.

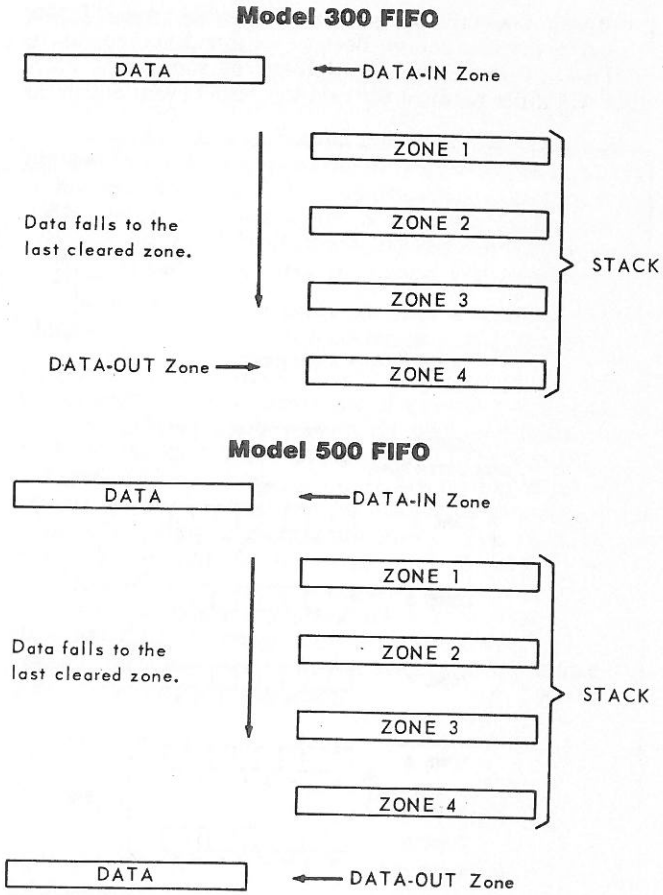

Figure 14.17 — FIFO Register Operation In The Model 300 and 500 Processors

An asynchronous shift register consists of an IN line, OUT line, CLEAR line and a FIFO box which contains three pieces of information. They are the first storage register address, last storage address, and the number of channels. See Figure 14.18.

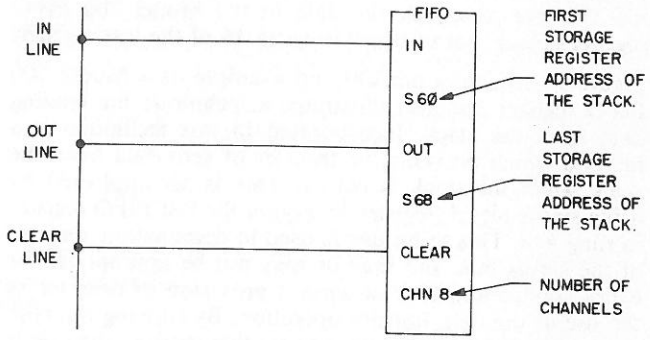

14.18 — Asynchronous Shift Register (FIFO) Rung

In the Model 300 processor, data will be shifted out of the last zone of the asynchronous shift register when the OUT line is toggled. All other data in the stack will be moved down one zone. In the Model 500 processor, the data from the second to last zone is copied into the last zone. All other data in the stack is moved down until all zone locations containing all zeros are "compressed" out.

14.6.2 EIGHT CHANNEL FIFO REGISTER

There are subtle differences between the way the eight channel FIFO register is implemented in the Model 300 and 500

processors. One difference is the way the DATA-OUT zone is used in the instruction. Because of this difference in the DATA-OUT execution, the number of zones in a FIFO stack will differ between the two processors even though the same number of registers may be stipulated in the instruction box. Figure 14.19 illustrates the difference between the Model 300 and the Model 500 eight channel FIFO operation.

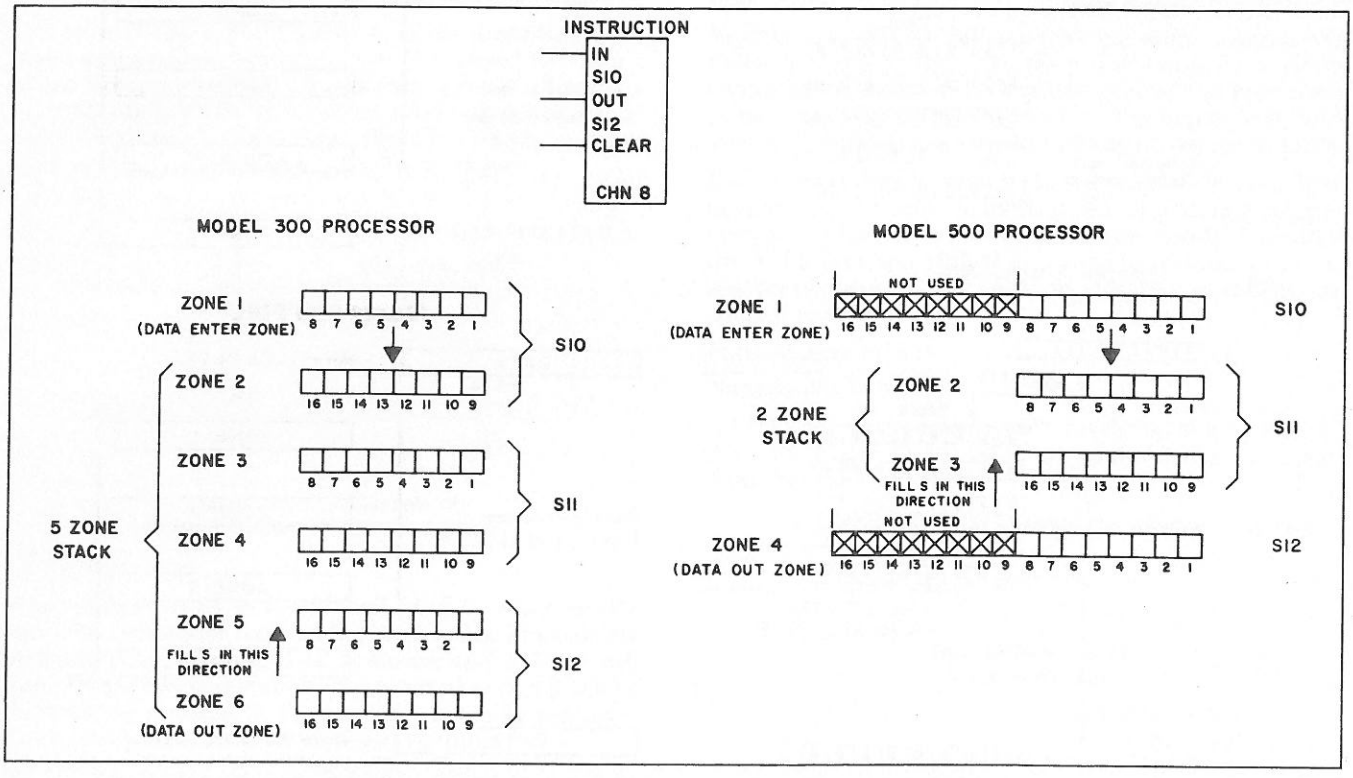

Figure 14.19 — Operation of Eight Channel FIFO Register

Notice the Model 500 processor incorporates a complete register for both the DATA-IN and DATA-OUT functions. Also notice that bits 9 through 16 are not used in both of these registers. As a result, two stack zones are available as compared to five stack zones in the Model 300 FIFO register. Observe also, that the data in the Model 300 FIFO register is read out of bits 9 through 16 of the last register.

Figure 14.20 shows not only an example of a Model 500 FIFO register but also illustrates a technique for reading data from the stack. Incorporated in this technique is a method which prevents the transfer of zero data from the stack when the stack is empty. This is accomplished by using status bit 23 (register empty) of the last FIFO register in rung #10. This technique is used to demonstrate one use of the status bits, and may or may not be appropriate for every application. One important provision of rung ten is the use of the data transfer operation. By copying the contents of the DATA-OUT zone to another register, the user is able to perform any other operation on that data without running the risk of changing the status bits of the last FIFO register. In this way, the conditions of the FIFO register are always available.

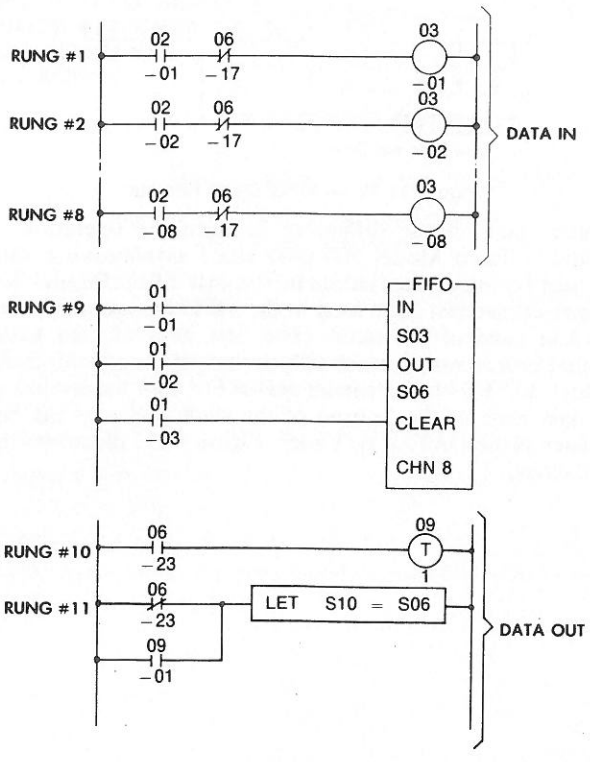

Figure 14.20 — Eight Channel FIFO Register

Circuit Operation (In the Model 500 Processor):

When contact 01-03 is open, storage registers S3, S4, S5 and S6 will be cleared (set to 0000) and the FIFO box will be disabled. When contact 01-03 is closed, an open to closed transition of contact 01-01 will cause the first eight bits of register S3 (DATA-IN zone) to be loaded into the last cleared zone of the stack. If the entire stack is empty of data, the first eight bits entered will be stored in the last zone in the stack (bits 9 thru 16 of register S5).

A closed to open transition of 01-01 will have no effect on the FIFO box.

Assuming other data exists in the FIFO, an open to closed transition of 01-02 will cause the data from the last zone of the stack (in this case bits 9 through 16 of register 5) to be transferred to the first eight bits of register 6 (DATA-OUT zone). All other data in the stack will move down to the bottom-most zone of the stack thus "compressing" out those zone-locations that contain no data.

Rung #11 takes the new data that was loaded into the DATA-OUT zone (when contact 01-02 is toggled and the empty stack is not empty as indicated by contact 06-23) and copies it into register S10 making the data available for further processing in the control program.

14.6.3 SIXTEEN CHANNEL FIFO REGISTER

There are subtle differences between the way the sixteen channel FIFO register is implemented in the Model 300 and 500 processors. One difference is the way the DATA-OUT zone is used in the instruction. Because of this difference in the DATA-OUT execution, the number of zones in a FIFO stack will differ between the two processors even though the same number of registers may be stipulated in the instruction box. Figure 14.21 illustrates the difference between the Model 300 and Model 500, 16 channel FIFO operation.

Notice the Model 500 processor uses a separate DATA-OUT zone which is not considered as part of the stack.

Figure 14.22 shows an example of a 16 channel FIFO register. The diagram also shows one of a number of techniques for writing data into the DATA-IN zone, and reading data from the stack. Notice that status bit 17 (register full) and status bit 23 (register empty) of the last register in the FIFO register are used to prevent the loading of data into a full stack and reading zeros from an empty stack. In this technique, data is read and then removed from the stack before new data is loaded onto the stack. This is to accomodate those applications where the stack is completely full and data is constantly being moved in and out of the FIFO register. Reading data from the stack first, frees the first zone of the stack for new data.

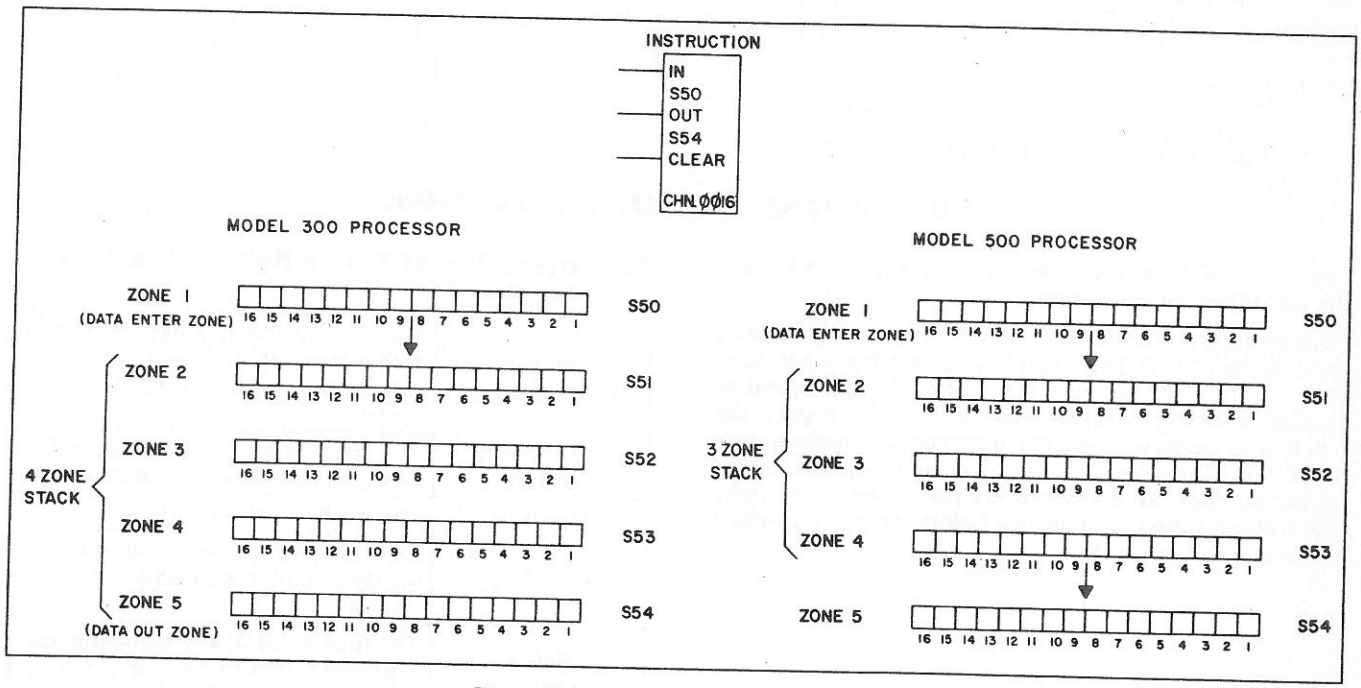

Figure 14.21 — Operation of 16 Channel FIFO Register

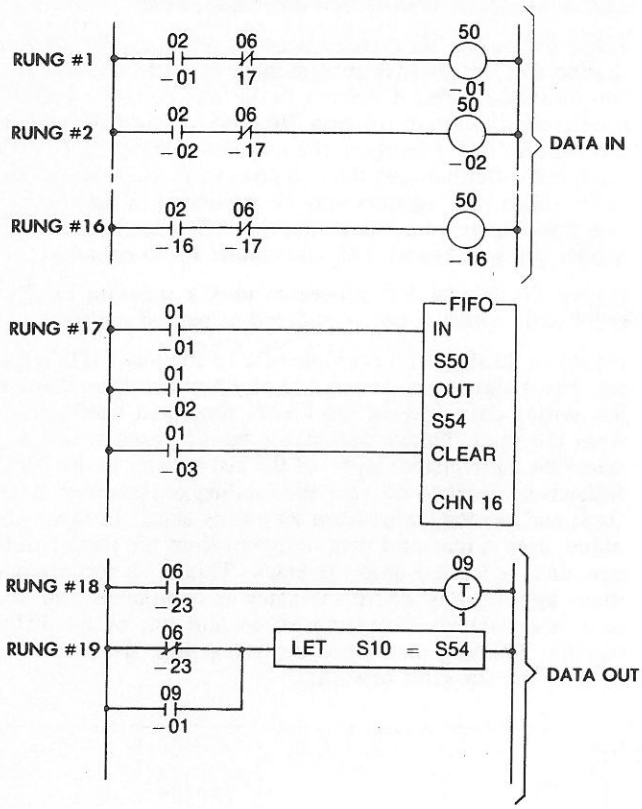

Figure 14.22 — Sixteen Channel FIFO Register

Circuit Operation (In Model 500 Processor):

When contact 01-03 is open, storage registers S50 through S54 will be cleared (set to 0000) and the FIFO box will be disabled. When contact 01-03 is closed, an open to closed transition of 01-01 will cause the data stored in DATA-IN zone (first zone) to be loaded into the last cleared zone of the stack. A closed to open transition of 01-01 will have no effect on the shift box.

An open to closed transition of 01-02 will cause the data from the last zone of the stack (in this case register S53) to be transferred to the last zone of the FIFO register (S54). All other data in the stack will move down to the bottom-most zone of the stack thus "compressing" out those zone locations that contain no data.

Rungs #1-16 enter data into the DATA-ENTER zone of the FIFO register whenever there is a transition of contact 01-01 from open to closed and bit 17 (register full bit of S54) is not set.

Rung #19 reads the data from the DATA-OUT zone of the FIFO register whenever there is a transition of contact 01-02 from open to closed and bit 23 (register empty bit of S54) is not set.

15.0 ADDITIONAL SPECIAL INSTRUCTIONS

The Model 500 instruction set has been expanded beyond the use of five-function math.

Programming the SPECIAL instructions is accomplished by pressing the "SPECIAL" soft-key, accessible when constructing an IF or LET rung, followed by the corresponding number associated with the instruction. The appropriate function is performed on the intermediate mathematical result which exists just prior to encountering the special instruction (note **all** operations are performed left to right, and each operation is completed before the next operation in the rung is executed).

15.1 Definition of Terms Relevant to This Section

Compare (IF Instruction)	Compare a value in a data register with a constant, numerical data value or the result of a math operation.
Intermediate Result	The result of one math operation in an expression containing many.
Operator	The math functions +, x, ÷, −.
Overflow	Exceeding the numerical value range the data register is capable of storing.
Result	The final value of any mathematical expression (result = A + B − C).
Softkey	Multifunction function key. Upper most row of keys on CRT Programmer keyboard.
Transfer (LET Instruction)	Storing a constant numerical data value or math result in a data storage register.

15.2 Register Usage

The Model 500 processor utilizes one 16 bit data register for each integer data value the user stores in memory.

The allowable range for an integer data value stored in an integer register is −32,768 to +32,767. The exceptions to the range limitations are registers used in timers and counters. Registers that store the current time and count are capable of a range between 0 and +9999.

15.3 Overflow Errors

Overflow errors are the result of attempting to store values too large for that register's capacity or exceeding the accumulator's capacity.

15.3.1 THE ACCUMULATOR

When LET instructions (data transfers) or IF instructions (data compares) containing math operations are scanned, the intermediate and final math results are temporarily stored in an accumulator. The accumulator contains the current running total of the math operation.

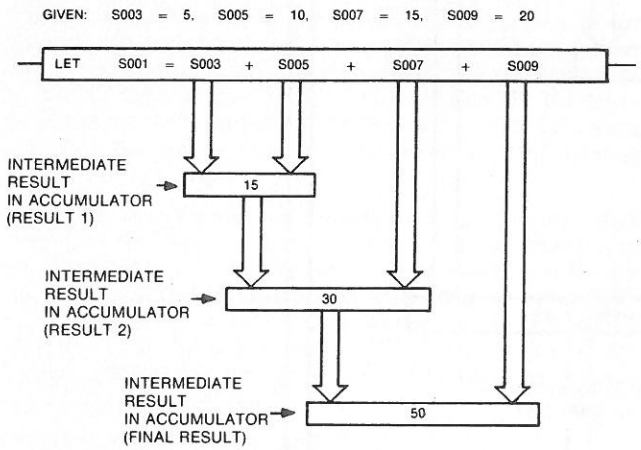

Figure 15.1 — Accumulator Operation

The accumulator can store a much larger value than an integer data storage register.

Accumulator's Allowable Range
−2,147,483,648 to +2,147,483,647

NOTE: The PC system operator has no direct control of the accumulator other than the order in which math operations are programmed unless any of the "alternate accumulator manipulation" functions are used. Refer to Section 15.7.

The special function always operates on the accumulated intermediate math result created by any math expressions preceding it. See Figure 15.2. Assume SYYY = 30.

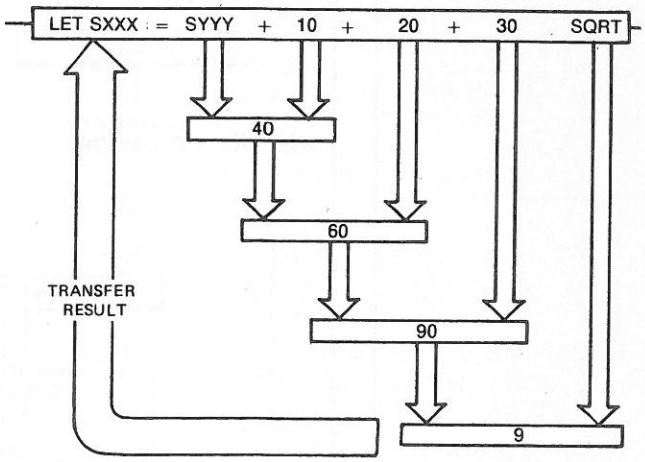

Figure 15.2 — Special Function Operation

15.3.2 CONDITIONS CAUSING AN OVERFLOW ERROR

Overflow errors are generated any time an attempt is made to exceed a data storage register's capacity. The table below shows the register type and allowable range of stored values.

Register Type	Capacity (Value Range)
Integer Register	-32,768 to +32,767
Integer Accumulator	-2,147,483,648 to +2,147,483,647

The following flow chart indicates when overflow errors will occur.

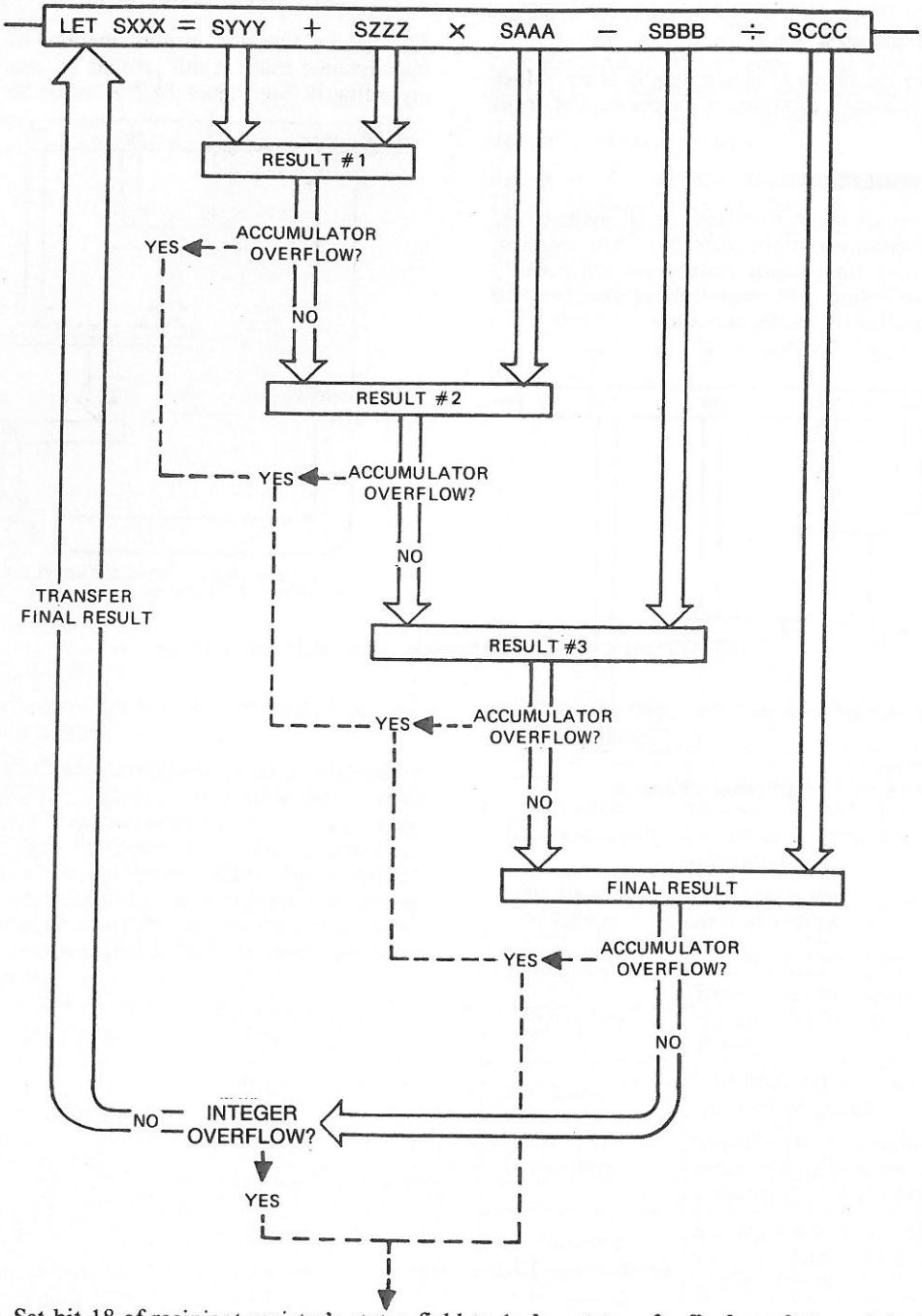

LET Instruction — Set bit 18 of recipient register's status field to 1; **do not transfer final result to recipient register.**

IF Instruction — Set bit 8 of control register 8176. **Solve rung false.**

Figure 15.3 — Overflow Error Flow Chart

15.4 Programming SPECIAL Instructions

Programming any of the SPECIAL functions will result in the indicated operation being performed on the intermediate result. To program, the user must first begin constructing a rung utilizing the IF or LET box format. The desired operation can then be applied to any intermediate result which exists to the right of the operator symbol (=, ≠, <, ≥).

To implement the desired function, the user must begin with the following "starting point" soft-key display:

REG.	MATRIX	FLP. REG.	FLP. MAT	FLP. IMD	+	-	x	÷	ETC

Striking the ETC soft-key will change the display to the following:

AND	OR	XOR	SPECIAL	SIZE		;			ETC

Striking the SPECIAL soft-key will change the display to the following:

SIN	BCD	BIN	COS	SQRT	LN	LOG	ABS	Y**X	

The user may now strike the proper soft-key if one of the listed functions is intended to be used or may instead enter from the keyboard the numerical value which corresponds to one of the additional SPECIAL functions. In the latter case, the entered number will appear in the IF or LET rung box and the soft-key display will revert to the "starting point" soft-key display.

Upon entering the desired numerical value, the user may either exit the box (if finished constructing the mathematical expression) or continue building the expression by following the SPECIAL instruction with either another SPECIAL instruction or a mathematical operator (+, -, x, or ÷). In either case, the abbreviation "SPEC" will appear in the box to indicate that the appropriate SPECIAL function has been entered in the rung.

Programming Considerations:

- The first element to the right of the operator symbol cannot be a mathematical operator or SPECIAL function.
- Entering a numerical value for a special function for which there is no corresponding function will result in PROCESSOR ERROR 05 when attempting to load the rung. Note SPECIAL functions are not numerically contiguous.

The user will need to be familiar with the following terms, as well as those in Section 15.1:

Accumulator—a 32-bit "scratch pad" register which contains the intermediate result.

Alternate Accumulator—another 32-bit "scratch pad" register which can be utilized by the user in certain cases to maintain precision that would otherwise normally be lost.

Intermediate Result (IR)—the data register immediately to the right of the operator symbol or the current running total of one or more math operations (stored in the accumulator).

New Intermediate Result (NIR)—the result obtained when applying a SPECIAL function to an intermediate result.

ALT—the value contained in the alternate accumulator.

15.5 LIST OF SPECIAL INSTRUCTIONS

The following represent example formats for the SPECIAL instructions. Note, IF statements could have been used in place of LET.

SPEC #	TITLE	FUNCTION	SAMPLE RUNG
1	BIN to BCD	Convert binary pattern to BCD value.	LET S10 = S20 SPEC BCD
2	BCD to BIN	Convert BCD value to binary pattern	LET S10 = S20 SPEC BIN
4	SQ ROOT	Take square root of positive value.	LET S10 = S20 SPEC SQR
7	|X|	Take the absolute value of x.	LET S10 = S20 SPEC ABS
11	SWAP 16	High byte and low byte of IR are interchanged.	LET S10 = S20 SPEC 11
12	SWAP 32	Most significant word of IR becomes the NIR.	LET S10 = S20 SPEC 12
13	READ STAT	Indirect register read of status field (data in S20 points to register where status field is found).	LET S10 = S20 SPEC 13
14	READ DATA	Indirect register read of data field (data in S20 points to register where data field is found).	LET S10 = S20 SPEC 14
15	FIND BIT	Indirect register bit search (find and reset lowest bit set in S20. Store 1 to 16 to identify bit, or store -32768 if all bits are equal to zero).	LET S10 = S20 SPEC 15
16	NEGATE	Change sign of current number.	LET S10 = S20 SPEC 16
17	NUM TYPE	Returns type of current number.	LET S10 = S20 SPEC 17
18	ACC ALT	Exchange current and alternate accumulators.	LET S10 = S20 SPEC 18
19	ADD ALT	Add S20 to alternate accumulator.	LET S10 = S20 SPEC 19
20	SUB ALT	Subtract S20 from alternate accumulator.	LET S10 = S20 SPEC 20
21	DUP ALT	Copy alternate accumulator into current accumulator.	LET S10 = S20 SPEC 21

22	DUP ACC	Copy current accumulator into alternate accumulator.	LET S10 = S20 SPEC 22
23	RANDOM	Generate random number (returns number ranging from zero to value of current accumulator minus one).	LET S10 = S20 SPEC 23

15.6 Indirect Register Read Operations

For the following functions, the number preceding the SPECIAL function acts as an indirect pointer to the desired register. The indirect pointer must be an integer (represented by a constant or storage register) ranging from 1 to 2008 or 8141 to 8176 (except for FNDBIT, which is restricted to 1 to 2008).

(13) RDSTAT - read the status field of the indicated indirect register. The status field becomes the new intermediate result. NIR = status field of the register pointed to by the IR.

(14) RDDATA - read the data field of the indicated indirect register. The data field becomes the new intermediate result. NIR = data field of the register pointed to by the IR.

(15) FNDBIT - locate and identify the lowest bit set in the indirect register data field. The lowest bit position that is set becomes the new intermediate result, and the bit itself is reset. If no bits are found set, the new intermediate result becomes 8000H (-32,768). Thus, the only values which the NIR can assume after executing this function are 1 to 16 (identifying the first set bit encountered) or -32,768 (indicating no bits are set).

15.7 Accumulator Manipulations

These functions allow the user to take advantage of the two 32-bit accumulators available in order to preserve precision that would normally be lost when an intermediate result or term would have otherwise been stored in a 16-bit storage register.

(18) ACCALT - exchange intermediate result with alternate accumulator. Thus, the previous intermediate result is now stored in the alternate accumulator, and the contents of the alternate accumulator become the new intermediate result.

(19) ADDALT - add intermediate result to alternate accumulator. Note the intermediate result is itself unchanged by the operation.

(20) SUBALT - subtract intermediate result from the alternate accumulator. Note the intermediate result is itself unchanged by the operation.

(21) DUPALT - duplicate alternate accumulator. The new intermediate result (stored in the accumulator) assumes the value of the alternate accumulator. The previous intermediate result is lost while the alternate accumulator is itself unchanged.

(22) DUPACC - duplicate accumulator. The intermediate result is copied into the alternate accumulator. The previous value in the alternate accumulator is lost while the intermediate result remains unchanged.

15.8 Miscellaneous Instructions

(23) RANDOM - generates a random number. The number preceding SPECIAL 23 (which must be a positive integer) is used as the "decode" value for the random number generator. The new intermediate result will fall in the range of zero to (IR-1). Note a decode value of 0 or 1 will return a random number value of zero.

(11) SWAP 16 - the high byte (bits 9-16) and low byte (bits 1-8) of the intermediate result are exchanged. The intermediate result must be an integer ranging from -32,768 to +32,767.

(12) SWAP 32 - the high word is copied to the low word of the intermediate result (which must be an integer) and becomes the new intermediate result.

(16) NEGATE - change sign of intermediate result. NIR = 0 - IR.

(17] NUMTYP - identifies the number type of the intermediate result. The new intermediate result becomes either 9, 11, or 13 based on the following descriptions:

9 = positive integer
11 = integer zero
13 = negative integer

APPENDIX A — EXECUTION TIMES

Any analysis of execution times for a given application must be based on the requirements of that application in terms of overall control system response. Refer to the discussion on system response time in the "SY/MAX PC Planning and Installation Guide", IB #30598 175-XX, section 4.5.

The judicious use of scan control techniques such as GOTO, GOSUB and HIGH PRIORITY SCAN (timed interrupt) instructions allows the user to ameliorate scan time to better meet the needs of the control system. We counsel against any expectation that this appendix will (or even can) provide scientifically precise and reliable scan times which can be duplicated by the user.

Posted execution times are for registers accessed in strictly parallel fashion, i.e. via a parallel digital driver-receiver. For Boolean functions, add 10% if the registers are stored in the local interface module, 22% if stored in the remote interface module. For non-Boolean functions, add 5% for either case.

INSTRUCTION LADDER DIAGRAM	TIME (usec)
External Contact	2.6
External Coil	2.6
Internal Contact	2.6
Internal Coil	2.6
Latch Coil	2.6
Unlatch Coil	2.6
Transitional Coil	5.2
Master Control Relay	2.6
Branch	0

COUNTER AND TIMER EXECUTION TIMES

COUNTER

OPERATION	TIME (microseconds)
CLEAR LINE	212
CLEAR LINE Closed	
NO Transition	242
UP LINE Transition	246
DOWN LINE Transition	252

TIMER

OPERATION	TIME (microseconds)
CLEAR LINE Open	212
CLEAR LINE Closed	
Not Timing (Timing Line Open)	248
Timing	
Timer Register < decode value	279
Timer Register = decode value	231

SHIFT REGISTER AND FIFO STACK EXECUTION TIMES

SHIFT* (Synchronous Shift Register)

OPERATION	TIME (microseconds) CHN 1	CHN 8	CHN 16
MCR Off	146	146	146
MCR On			
CLEAR LINE Open	197+30/REG	197+30/REG	197+30/REG
CLEAR LINE Closed			
No Transition	146	146	146
FWD LINE Transition	214+33/REG	220+57/REG	204+39/REG
REV LINE Transition	214+33/REG	220+57/REG	204+39/REG

NOTE: *SHIFT

A synchronous shift register consists of a FORWARD line, REVERSE line, CLEAR line, and a shift box which contains three pieces of information. They are the first storage register address, last storage register address, and the number of channels. The time base noted includes these two registers.

FIFO STACK (Asynchronous Shift Register)**

OPERATION	TIME (microseconds) CHN 8	CHN 16
MCR Off	146	146
MCR On		
CLEAR LINE Open	240+24/REG	240+24/REG
CLEAR LINE Closed		
No Transition	190	190
IN LINE Transition		
Stack Empty	349+38/REG	349+34/REG
Stack Full	283	302
OUT LINE Transition		
Stack Empty	352+52/REG	331+38/REG
Stack Full	359+86/REG	331+62/REG
IN and OUT Transition		
Stack Empty	485+93/REG	480+90/REG
Stack Full	498+86/REG	498+66/REG

NOTE: **FIFO Stack

An asynchronous shift register consists of an IN line, OUT line, CLEAR line, and a FIFO box which contains three pieces of information. They are the first (DATA IN) register address, last (DATA OUT) register address, and the number of channels. Each FIFO register includes a minimum of three registers: a DATA-IN register, a DATA-OUT register, and a storage register.

MATH AND LOGIC EXECUTION TIMES

MATH OPERATIONS

DATA TYPE	TIME (Microseconds) ADD	SUBTRACT	MULTIPLY	DIVIDE
Integer Constant	85	88	218	191
Integer Register	103	107	257	208
Matrix Register	339	344	483	428

LOGICAL OPERATIONS

DATA TYPE	AND	OR	XOR
Integer Constant	80	80	80
Integer Register	93	93	93
Matrix Register	332/REG	332/REG	332/REG

SPECIAL MATH OPERATIONS

Binary to BCD [BCD]	251
BCD to Binary [BIN]	230
Square Root [SQRT]	269-884 (varies with number size)

REGISTER LET AND IF BOX EXECUTION TIMES

LET (Register Assigned Stored To:)

LOAD DATA TYPE*	TIME (microseconds)
Integer Constant	198
Integer Register	212
Matrix Register	442

IF (Register Compared)

LOAD DATA TYPE*	TIME (microseconds)
Integer Constant	200
Integer Register	231
Matrix Register	427

MATRIX LET AND IF BOX EXECUTION TIMES

MATRIX LET (Matrix Stored To:)

LOAD DATA TYPE*	LEVEL	TIME (Microseconds) (+) INCREMENTAL	(↑) REPEAT**
Integer Constant	461	487	492+297/REG
Integer Register	490	502	508+332/REG
Matrix Register	499	513	521+330/REG

MATRIX IF*** (Matrix Compared To:)

LOAD DATA TYPE*	LEVEL TRUE	LEVEL FALSE	TIME (microseconds) (↑) REPEAT** TRUE EXISTS	ALL FALSE
Integer Constant	412	420	429+290/REG FALSE	469+290/REG
Integer Register	432	465	443+319/REG FALSE	498+319/REG
Matrix Register	449	477	463+330/REG FALSE	502+330/REG

NOTES: All times are equal for all comparisons (=,≠,≥,<)

* LOAD DATA TYPE refers to the type of element immediately to the right of the equal sign (=) or comparison sign (=,≠,≥,<) in the LET and IF boxes.

** The listed times are for the execution of one register of the matrix; to calculate the total time when doing Repeat Matrix operations, multiply the time by the matrix size (number of repeat operations).

*** MATRIX IF. With matrix data comparisons, rungs may be solved false before a rung is found true; this must be a consideration when determining total matrix execution times.

SPECIAL FUNCTION EXECUTION TIMES

OPERATION	TIME (microseconds)
GOTO	2.6
GOSUB	140
RETURN	100
MARK ST SUB	0
MARK	2.6
PRINT:	
No Transition	190
Transition	438 + 73/ALPHA PAIR + 132/REG
ALARM:	
No Transition	223
Transition	482 + 30/EACH ADDITIONAL ROUTE
READ:	
No Transition	255
Transition	505 + 30/EACH ADDITIONAL ROUTE
WRITE:	
No Transition	255
Transition	587 + 30/EACH ADDITIONAL ROUTE + 45/REGISTER
Immediate Communications Update	0-5000

APPENDIX B — ERROR CODES

B.1 Introduction And Description

B.1.1 GENERAL INFORMATION

Errors detected by the processor and error codes annunciated on the CRT provide the operator with information useful in isolating problems.

Some errors are indicated as messages on the screen display while other error indications involve error code numbers. Since the messages are self explanatory, this appendix deals directly with the numbered error codes.

These error code numbers can be broken into two general categories and are indicated in different locations on the CRT screen.

In the first category are the **peripheral to PC system** interaction errors of which 3 classifications of error codes exist. These errors are indicated at the bottom of the screen display or for some special cases, in the status register of a communications rung.

In the second category are the **PC system operational errors** which are errors detected within the processor or any one of the modules contained in a programmable controller system. These errors are indicated in the STATUS Mode display next to the label ERROR NUMBER. The number displayed is also the number contained in the error code control register 8175 or possibly in a Local Interface Module error code control register (when using remote I/O).

B.1.2 PERIPHERAL TO PC SYSTEM INTERACTION ERRORS

These types of errors are associated with attempts to perform illegal operations with the processor or the communication hardware is not functioning properly. This category of error will only be generated when using the keyboard to command processor operations or when the processor is attempting communication with other responding devices.

The three classifications of peripheral to PC system interaction error codes are: Processor, Transmission, and Tape. When an error occurs while a programmer is connected to the processor, one of these messages will be shown on the display along with a number. Should an error occur during the execution of a processor communication rung a Processor Error will be used to indicate the fault. The number code will be shown when the status register of the communication rung is displayed.

Processor Errors

These errors indicate that the operation attempted was not successfully completed. The error code numbers range from 01 thru 99. To resolve the error situation, check the error code description in the following table, use the CLEAR key to clear the error indication if the error has been displayed on a programmer, and take the appropriate recourse action. Error codes indicated by an asterisk (*) in the following Error Code Table, may also be displayed in the status register of a communications rung.

PROCESSOR ERROR CODE TABLE

Error Code No	Error Description
01*	Illegal protocol opcode, the device does not recognize the instruction. Reenter the desired operation.
02	Illegal intermediate code format. Reenter the desired operation.
03*	An illegal address has been attempted.
04	Illegal rack addressing has been attempted.
05*	An instruction has been attempted which is not allowed in the processor. (Example: Square root in Model 300 processor.)
06	Item being searched for, cannot be found.
07*	An attempt has been made to alter data in a protected register. Check Control Register 8176.
08	An attempt has been made to access protected memory. Check Control Register 8176.
09*	An attempt has been made to alter data in a READ only register or a register containing external inputs.
10	An attempt has been made to exceed memory limitations.
11*	Communications error (receiver overflow). Reenter the desired operation.
12	Illegal CPU rack addressing; Register assignments must be divisible by four.
13*	Communications error (link error). This error is generated by the processor. Check Control Register 8175 or the status register of the communication rung. Check cable connections between devices.
14	The operation that has been attempted is not allowed in RUN.
15*	Communication overflow. Check the baud rate for compatibility between communicating devices. Reenter the desired operation.
16	The register count in a communication rung is too large for the processor.
17*	The remote device is inactive. This error code is generated by the Network Interface Module. Check cable connections between devices.
18	The rung number used is not allowed.
19*	An illegal READ parameter has been assigned.
20	An illegal channel number, or no channel number has been assigned.
21*	Trying to change a forced bit or WRITE to an external output while the bus master is in HALT.
22	The forcing function is inhibited from the processor COMM port.
23*	An attempt has been made to alter data in a fenced register.
24	An attempt has been made to force a nonforceable register.

25*	CPU error, check Control Register 8175. Refer to the following section on CPU/LI errors.
26	Rack Addressing and user memory overlap.
27*	Memory error. A CLEAR ALL operation is required.
28	An illegal baud rate was selected.
29*	An attempt has been made to send a message with an illegal route.
30	An attempt has been made to alter PROM memory after the PROM inhibit coil was entered in memory.
31*	See **Tape Errors**
32	Operation is not allowed in PROM memory (such as inserting, deleting, or replacing a rung).
33*	See **Tape Errors**
34	For UVPROM processors only: Read after Write error; parity error; or security jumper was removed and no UVPROM inhibit coil was programmed into memory.
35*	See **Tape Errors**
36	Replace rung operations are not allowed on this rung. Use delete and insert operations only.
37*	See **Tape Errors**
38	Unused
39*	Alarm already set within the D-LOG Module.
40	Unused
41*	An illegal register WRITE. The D-LOG module does not accept a register WRITE into certain registers.
42	Unused
43*	An illegal operation has been attempted. D-LOG Module protected.
44	Unused
45*	Operation is not allowed. D-LOG Module tape operation is in progress.
46	Unused
47*	Operation is not allowed due to keyswitch position.
48	Programming of an MCR in subroutine area is not allowed.
49	I/O, Register or Channel is safeguarded
50	Rack Addressing is not alterable when forcing is active.
51*	A module is not seated properly or missing, or no rack address assigned to the module, or the address exceeds the capability of the processor.
52	Unused
53*	See **Tape Errors**
54	Illegal MARK number.
55	See **Tape Errors**
56	Unused
57	Unused
58	Unused
59	Unused
60	Illegal MARK number. GOTO or GOSUB with numbers above 8189 not allowed.
61	MARK ST. SUB rung cannot be inserted-append only allowed.
62	RTN (return) rungs are not allowed in ladder area.
63	MARK number previously used in the program. Each MARK instruction must have a unique number assigned.
64	Operation is not allowed while the processor is in RUN. Cannot delete a RTN if any GOSUB contains the same MARK number.
65	Operation is not allowed. Cannot delete MARK ST. SUB rung unless all subroutines are deleted.
66	Operation is not allowed — cannot delete MARK having an associated RTN (return).
67	Operation is not allowed — RTN rungs must have an associated MARK number.
68	Operation is not allowed — only one RTN per MARK number is allowed.
69	Operation is not allowed while the processor is in RUN — GOSUB cannot invoke a subroutine having no RTN.
70	Operation is not allowed while the processor is in RUN — GOTO rung cannot jump to a MARK having an associated RTN.
71	Operation is not allowed while the processor is in RUN — cannot delete MARK until all GOSUBs or GOTOs with the same number are deleted.
72	Operation is not allowed while the processor is in RUN — rung cannot have unused MARK number. A GOTO or GOSUB with an undefined MARK is not allowed. The MARK must be programmed before the GOTO or GOSUB is programmed.
73	Unused
74	Unused
75	Unused
76	Unused
77	Unused
78	Unused
79	Operation is not allowed when the processor is in RUN while the Timed Interrupt is enabled.

Tape Errors

These errors are generated when performing tape operations. When the processor is operating with a Loader/Recorder through the use of communications rungs, the status register of that rung can be checked for the presence of an error condition.

Error Code No.	Error Description
31*	The end of the tape was encountered before the operation could be completed.
33*	Tape Data Error detected, the block of data involved in the Read or Write operation was faulty.
35*	The tape cartridge is not seated properly or is missing, or the "Record" tab on the cartridge has been set to the Write Inhibit position.
37*	An attempt to Skip or Read a file was made when already past the last file on the tape.
53*	Illegal Tape Format — Erase Track Required.
55*	Tape operation has been aborted. Retry the operation.

Transmission Errors

Communication errors due to hardware problems are annunciated on the CRT screen by the message "Transmission Error" followed by a number.

The error code numbers that appear most frequently are the numbers 1, 72 and 74. When an error such as this occurs, check all cable connections and BAUD rates (Register 8169), then use the CLEAR key to clear the error indication. When all connections are secure, retry the operation.

B.1.3 PC SYSTEM OPERATIONAL ERRORS

These error codes indicate PC system operational errors and consist of a five digit decimal value. These error codes or (ERROR NUMBERS) are the contents of the Control Register 8175 data field (bits 1-16). Seven possible classifications of operational error codes exist and they are:

ERROR NUMBER	TYPE OF ERROR
30000-32700	CPU/LI ERROR
29000-29999	MISCELLANEOUS ERROR
20000-28192	SLOT REGISTER ERROR
19000-19016	SLOT ERROR
10000-18192	READ AFTER WRITE ERROR
01000-09999	PROCESSOR COMMUNICATION PORT ERROR
00001-00999	GENERAL ERROR

When an error condition occurs, the appropriate error code is loaded into Control Register 8175 only if the register contains zero or if it presently contains an error code of lower priority (a smaller number). The previous error code is then lost.

The same operational errors are used by the Local/Remote Interface systems to indicate errors in devices under its control. In this case, Register 8175 or the ERROR NUMBER in the CRT Status display will indicate the slot of the Local Interface having the problem. Once located, inspection of the error control register inside the Local Interface will reveal which of the remote devices contains the error. Refer to Section B.2 for greater detail on using the error codes to isolate system faults.

CPU/LI Error (30000-32700)

This error indicates a problem with either the processor (CPU) or Local Interface Module.

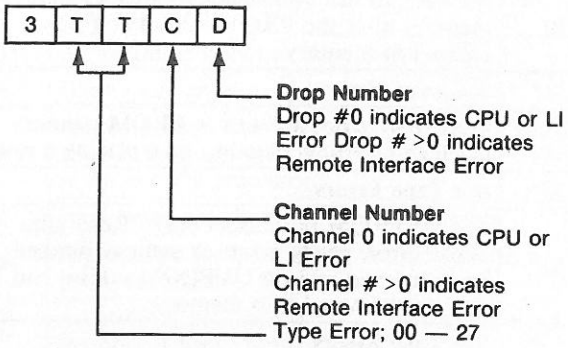

TT	ERROR DESCRIPTION
00	Status Register Read/Write Parity Error
01	Image RAM Read/Write-Parity Error
02	Internal Register Data Error
03	Illegal PROM Format
04	Illegal Opcode Encountered in RUN
05	Bus Error (Interrupt Detected on Bus)
06	Software Watchdog Error
07	Not Used
08	Software Diagnostic Error
09	User Memory Read/Write-Parity Error
10	Illegal Data in User Memory
11	PROM Memory Corrupted
12	Illegal Addressing Map Code
13	Transmission Error Exceeds Tolerance
14	Loss of Transmission
15	More External I/O Registers Assigned Than Module Can Handle
16	Too Many Registers Assigned to the Drop
17	Addressing More than 8 Drops per Channel
18	Addressing Number of Channels Exceeded Module Capabilities
19	Addressing Map Checksum Error
20	Bus Error — Watchdog Time Out
21	BPU Diagnostic Error
22	Parity Circuit non-functional
23	Clear Line Error
24	Executive Scratch RAM Error
25	Watchdog Tolerance Error
26	Hardware Diagnostic Error
27	Module Inactive

Miscellaneous Errors (29000-29999)

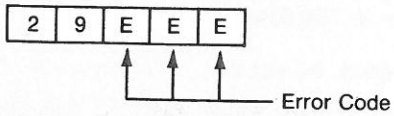

EEE	Error Description
000	Subroutine Nesting Error●
100	Time to Process the Timed Interrupt Subroutine has Exceeded the Time Base.●
101	Timed Interrupt Routine Missing
102	Time to Solve a Rung has Exceeded the Tolerance Set Within a Timed Interrupt.●
300	Mixed Primary/Back-up LTIs in CPU rack.▶
301	LTI Timeout on Short Transfer■
302	LTI Timeout on Long Transfer■
500	Number of Assigned Local Interface Registers must be at least 8 for 1 defined channel, and 12 for 2 defined channels.
501	Insufficient Local Interface Control Registers
510	RTI Wired Improperly — Ports A and B are mixed.
511	LTIs in CPU racks A and B have equal states of operation and no primary designation
512	Back-up Transfer System cannot be in RUN when Primary Transfer System is in DISABLE OUTPUTS
513	Rack Addressing between LTIs in racks A and B (Primary and Back-up) are not the same

●Control register 8184 will contain the rung number where the error took place. If 8184 equals zero, check Rack Addressing.

▶The data field of Control Register 8184 contains the bit table of primary or back-up status (bit set indicates primary) while the status field of Control Register 8175 identifies the slots which contain LTIs (bit set indicates LTI present).

■The data field of Control Register 8184 identifies the first register assigned to the LTI that caused the error while the status field of Control Register 8175 contains the elapsed time (in msec.) that the scan was held.

Slot Register Error (20000-28192)

In the event of a Slot Register Error, the ERROR NUMBER (last four digits) will point out the first register number assigned to the CPU register slot containing a faulty register module. Further inspection of that register's status field will provide additional diagnostics.

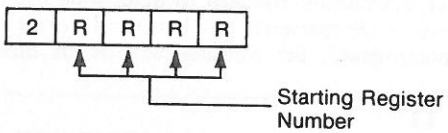

Slot Error (19000-19016)

In the event of a Slot Error, the ERROR NUMBER will point out the slot number experiencing the error.

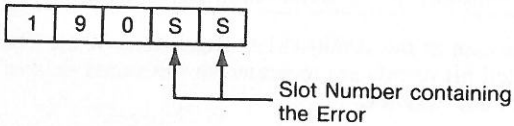

NOTE: ERROR 19000 same as ERROR 32000.

Register Read After Write Error (10000-18192)

A read after write error indicates a particular bit in a register has not maintained the condition written to it by the processor. The error number (last four digits) will point out which register encountered the problem.

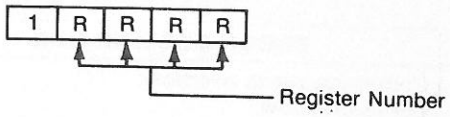

By displaying the status field (bits 17-32) of the control register containing the error code, the bit or bits causing the malfunction will be indicated (by a 1). Since each register contains both a status field and a data field, control register 8184 is used to indicate which set of bits contains the problem.

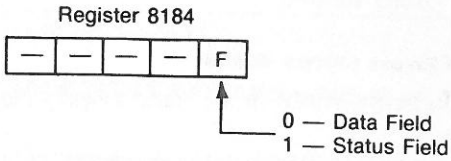

If the faulty register is used to control outputs and control register 8184 indicates the bad bits are contained in the data field, most likely, an output module has caused the problem. Following is a diagram which can be used to isolate the output module having the problem.

In addition, note that a parity error can also be detected in a register and is indicated by a zero in all bit positions.

Status Field of Control Register 8175 or of Local Interface Error Control Register

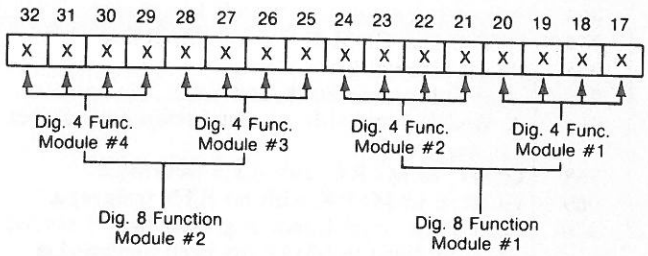

Checks:

a. If X=0, Bit was read correctly.

b. If X=1, Bit was read incorrectly.

c. If all X's=0, Parity error was detected.

Processor Communication Port Error (01000-09999)

To clear a communication port error, toggle the processor keyswitch from HALT to RUN, or Clear S8175. If this does not clear the error, cycle power to the processor. These errors can be seen in the STATUS Mode Display by the ERROR NUMBER. Also check remote device and cable connections.

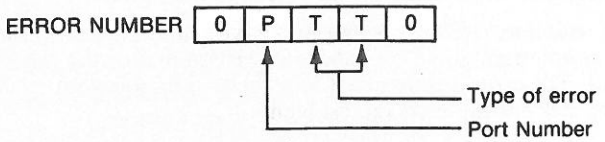

TT	ERROR DESCRIPTION
11	Communications overflow.
12	Buffer overflow.
13	Illegal data.
14	Wrong reply (odd/even).
15	Checksum error.
16	Framing error.
17	Parity error.
18	Inability to communicate thru Port #P.
19	Retry timeout.

General Errors (00001-00999)

The ERROR NUMBER in the Status Display indicates the problem.

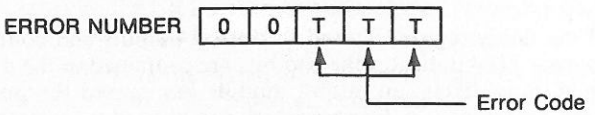

TTT ERROR CODE	ERROR DESCRIPTION
900	Control registers corrupted.*
901	Data registers corrupted.*
960	HALT or HALT/RUN bit set.
962	Tolerance equal to or greater than the rate.
963	Timed Interrupt time base is less than 3.
964	GOTO and GOSUB to same MARK.▲
965	Illegal Internal Error Code.
966	User Subroutine Stack Error.▲
967	A MARK rung with the same reference number is required.▲
968	GOTO to MARK with RTN (return).▲
969	GOSUB to MARK with no RTN (return).▲
970	Scan Time of processor is greater than 1 second or scan limit in S8167 has been exceeded.●
971	Scan Time Limit of Processor has been exceeded due to long LTI transfer. (Check register 8184 for elapsed time in msec)
979	Rack Addressing missing.
980	Keyswitch in RUN and no program in memory.
981	PROM inhibit coil not in memory (PROM processor).
983	Safeguarding rung not in memory.
984	Undefined register programmed in user memory.●

●S8184 will contain the rung number being executed when the error occurs.
▲S8184 will contain the MARK number.
*Control registers are normalized and data registers are cleared. Bit 8176-9 will also be set. Toggling keyswitch will allow CPU to run.

B.2 Using Error Codes To Isolate P.C. System Faults

B.2.1 GENERAL CONCEPT

When a P.C. system, which was once operating correctly malfunctions, one of three situations can arise: either the whole P.C. system shuts down, one or more drops shut down, or a run time communication port error is detected. Once the malfunction is identified as existing in one of these three categories, the P.C. SYSTEM OPERATIONAL ERROR CODES can be used to isolate the fault. Recognition of the first category is obvious however, the second category can exist only when the P.C. system incorporates remote I/O and the override bit is set in the Local Interface Module (Refer to LI/RI Interface Instruction Bulletin 30598-247-XX).

The third category of malfunction deals with communications to external devices and requires that control register 8175 be monitored by the program for errors in the range 01000 to 02190. These types of errors are different from those described in the "Processor Errors" section in that they are generated by the processor itself and not by the external device.

B.2.2 WHEN THE SYSTEM SHUTS DOWN

When the processor halts, register 8175 should be the first point of interrogation. The error code indicated will be one in the following number ranges:

ERROR CODE	DESCRIPTION
30000-32700	CPU/LI Error
29000-29999	Misc. Error
20000-28192	Slot Register Error
19000-19016	Slot Error
10000-18192	Read After Write Error
00001-00999	General Errors

In the case of the 20000-28192 Slot Register Errors two courses of action may be taken depending on the register number indicated by the last four digits. If the register is the first assigned to a register module, interrogating the status field of that register will indicate the error. (Refer to appropriate register module Instruction Bulletin.) If the register number is the first assigned to a Local Interface Module (when using remote I/O), then further interrogation of the LI error code register is required. (Refer to Appendix D of the LI/RI Instruction Bulletin to determine the address of the LI error code register/s.) When the LI error code register is interrogated, the number will be in the following ranges:

LI ERROR CODE	DESCRIPTION
30000-32728	CPU/LI Error
20000-28192	Slot Register Error
10000-18192	Read After Write Error

In the case of the 10000-18192 Read After Write Errors, the affected bit or bits are indicated in the status field of the LI error code register.

Following is a flow chart which illustrates the previously described procedure.

P.C. SYSTEM SHUTS DOWN

STEP 1: INTERROGATE S8175

IF 30000-32700; Refer to "CPU/LI Error"

IF 29000-29999; Refer to "Misc. Error"

IF 20000-28192; Refer to STEP 2, following

IF 19000-19016; Ensure module(s) are seated properly in rack

IF 10000-18192; Look at status field of S8175 for an indication of the affected bits and refer to "Read After Write Error"

IF 0001-0099; Refer to "General Error" and interrogate control register S8184 when indicated

STEP 2: USING THE REGISTER NUMBER INDICATED BY THE LAST FOUR DIGITS DETERMINE THE SLOT TO WHICH THE REGISTER IS ASSIGNED

IF assigned to a register module; Look at status field of the register number indicated by the error code then refer to appropriate register module Instruction Bulletin for the meaning of the error number

IF assigned to a local interface; Interrogate the LI error code register then refer to STEP 3

STEP 3: INTERROGATE THE LI ERROR CODE REGISTER

IF 30000-32700; Refer to "CPU/LI Error"

IF 20000-28192: Using the register number from error code (last four digits), determine slot to which register is assigned. The register module in that slot, generated the error. Look at status field of that register then refer to appropriate register module Instruction Bulletin for the meaning of the error number.

IF 10000-18192; Look at status field of LI error code register for an indication of the affected bits and refer to "Read After Write Error"

EXAMPLES:

Shown is an arbitrary P.C. system configuration with four different fictitious malfunctions (which are not the only ones possible) marked by numbers. Following are the steps one would go through to isolate each type of problem (based on the previous flow chart). The four problem areas are the:

— CPU
— Local Register Module
— Remote Register Module
— Remote I/O Module

FOUR P.C. SYSTEM MALFUNCTIONS

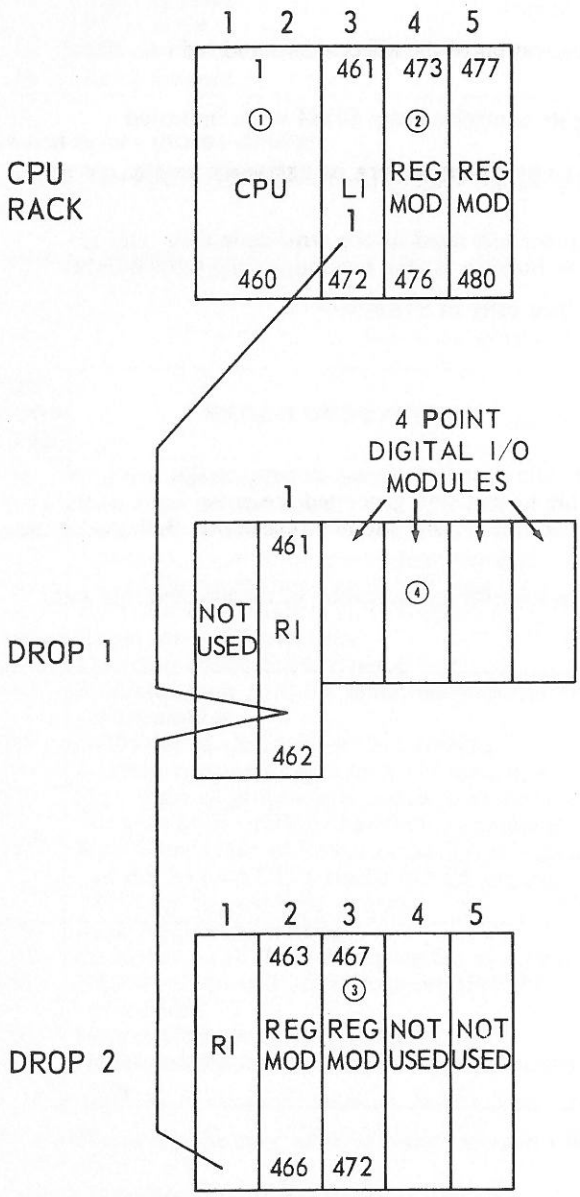

Figure B.1 — A Typical P.C. System

*NOTE: Arbitrary register assignments have been added to this diagram to aid in the following explanation.

① Malfunction in CPU

A malfunction in the CPU would cause the system to shut down therefore the "P.C. System Shuts Down" flow chart should be used.

Result of STEP 1: Since a malfunction in the CPU itself, caused the system to shut, interrogating control register 8175 would result in an error code in the range of 30000-32700. By referring to the "CPU/LI Error" section the specific error can be determined.

② Malfunction in a Local Register Module (Located in CPU Rack)

A major malfunction in a register module located in the CPU rack would cause the system to shut down, therefore the "P.C. System Shuts Down" flow chart should be used.

Result of STEP 1: Interrogating control register 8175 would result in a 20473 error code.

Result of STEP 2: The error code indicates the register module in slot four of the CPU rack has malfunctioned since it is the module containing register 473 as the first register address. By looking at the status field of register 473 and then referring to the appropriate register module Instruction Bulletin, the specific error can be determined.

③ Malfunction in a Remote Register Module

A malfunction in a register module located in a remote rack will cause the total system to shut down if the override bit in the local interface module (LI) is **not** set. If this is the case, the "P.C. System Shuts Down" flow chart should be used.

Result of STEP 1: Interrogating control register 8175 would result in a 20461 error code.

Result of STEP 2: The register number indicated in the error code is 461, which is the first register in the LI. Interrogating the LI error code register (in this case 8163) will provide additional information as to which module in the remote I/O system caused the shut down.

Result of STEP 3: Interrogating the LI error code register (8163 in this case) would result in a 20467. Since the register module in drop two slot three contains register 467, that module is responsible for the system shut down. By looking at the status field of register 467 and then referring to the appropriate register module Instruction Bulletin, the specific error can be determined.

④ Malfunction in a Remote I/O Module

A malfunction in an output module located in a remote rack will cause the total system to shut down if the override bit in the local interface module (LI) is **not** set. If this is the case, the "P.C. System Shuts Down" flow chart should be used.

Result of STEP 1: Interrogating control register 8175 would result in a 20461 error code.

Result of STEP 2: The register number indicated in the error code is 461, which is the first register in the LI. Interrogating the LI error code register (in this case 8163) will provide additional information as to which module in the remote I/O system caused the shut down.

Result of STEP 3: Interrogating the LI error code register (8163 in this case) would result in a 10461. Looking at the status field of 8163 will provide the bit mask, indicating which output module associated with register 461 caused the failure.

B.2.3 WHEN A REMOTE RACK SHUTS DOWN

When the P.C. system incorporates remote I/O and a remote rack or racks halts without causing the rest of the system to halt, the error code register of the Local Interface module controlling that drop will contain the error number of the fault. When the LI error code register is interrogated, the number will be in the following ranges:

LI ERROR CODE	DESCRIPTION
30011-32728	CPU/LI Error
20000-28192	Slot Register Error
10000-18192	Read After Write Error

In the case of the 10000-18192 Read After Write Errors, the affected bits are indicated in the LI error code register.

Following is a flow chart which illustrates the previously described procedure.

EXAMPLES:

Using the malfunctions three and four in Figure B.1 as examples, following are the steps one would go through to isolate each type of problem (based on the previous flow chart). The two problem areas are the:

— Remote Register Module
— Remote I/O Module

1. Malfunction in a Remote Register Module

A malfunction in a register module located in a remote rack will cause just that rack (drop) to shut down only if the override bit in the local interface module (LI) is set. If this is the case, the "Remote Rack/s Shuts Down" chart should be used.

Result of STEP 1: Interrogating the LI error code register (8163 in this case) would result in a 20467. Since the register module in drop two slot three contains register 467, that module is responsible for the system shut down. By looking at the status field of register 467 and then referring to the appropriate register module Instruction Bulletin, the specific error can be determined.

2. Malfunction in a Remote I/O Module

A malfunction in an output module located in a remote rack will cause just that rack (drop) to shut down only if the override bit in the interface module (LI) is set. If this is the case, the "Remote Rack(s) Shuts Down" chart should be used.

Result of STEP 1: Interrogating the LI error code register (8163 in this case) would result in a 10461. Looking at the status field of 8163 will provide the bit mask indicating which output module associated with register 461 caused the failure.

B.2.4 PROCESSOR COMMUNICATION PORT ERROR DETECTED

These errors are different from those Processor Errors associated with communications listed earlier in this appendix. The difference is that Processor Communication Port Errors are detected by the processor rather than the external communicating device. The only Processor Error that has any relationship to Processor Communication Port Errors (01000-02190) is Processor Error code 13. When error 13 is indicated in a status register of a communication rung, interrogation of control register 8175 will result in the display of one of the Processor Communication Port Errors (01000-02190).

These errors can also be detected when an external device is asking for information from the local processor. In this case, there is no communication rung status register to indicate the fault. Therefore, it is up to the user to implement the means to annunciate these types of errors.

REMOTE RACK(S) SHUTS DOWN

INTERROGATE APPROPRIATE LOCAL INTERFACE ERROR CODE REGISTER

IF 30000-32700; Refer to "CPU/LI Error"

IF 20000-28192; Using the register number from error code (last four digits), determine slot to which register is assigned. The register module in that slot, generated the error. Look at status field of that register then refer to appropriate register module Instruction Bulletin for the meaning of the error number.

IF 10000-18192; Look at status field of LI error code register for an indication of the affected bits and refer to "Read After Write Error"

APPENDIX C — RAM/PROM PROCESSOR

C.1 Introduction

The Class 8020 Type SCP-544 Processor has a total user memory size of 8K words with a memory combination of RAM and UVPROM. This RAM/PROM processor allows the user to program critical circuits, such as safety interlocks and emergency shutdown sequences, in a non-alterable memory where they cannot be changed, while the RAM memory can be used for other functions requiring alteration. This capability also allows additional programs to be added at a later date without affecting the critical circuits programmed in UVPROM. No gap exists between the programs stored in RAM and UVPROM memories. Ladder diagram rungs are numbered sequentially starting at rung one and continuing to the end of the control program. The UVPROM memory provides non-volatility on loss of system power, and also prevents unauthorized changes to its control program. On loss of system power to the processor, the RAM program is retained by battery back-up in the system power supply.

The Class 8020 Type SCP-544 Processor RAM/PROM processor has a total user memory of 8K words. Of this 8K user memory, a maximum of 5461 words can be programmed into the UVPROM memory. The remaining portion of the 8K memory not programmed in PROM is available for the RAM control program. (Example: If the PROM control program uses 5461 words, the remaining 2731 words of user memory can be programmed in RAM, minus 47 words used for overhead, or if the PROM control program used 2000 words the remaining 6192 words of user memory, minus 47 words for overhead, can be programmed in RAM.)

MEMORY MAP

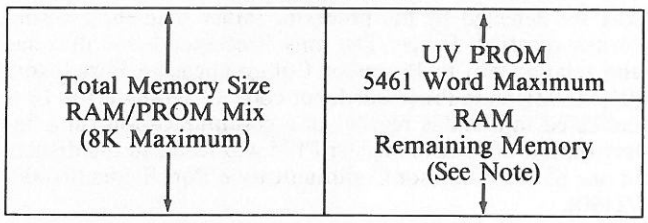

Figure C.1 — Type SCP-544 Processor Memory Map

NOTE: 47 words are required for overhead.

C.2 Program Development

C.2.1 GENERAL DESCRIPTION

Since the Class 8020 Type SCP-544 does not have on-board programming capability, it cannot be used for initial program development. The SCP-544 Processor can be used later for editing the RAM portion of the completed control program. Special equipment and procedures are required to develop and load user programs into the UVPROM portion of the Class 8020 Type SCP-544 processor memory. A description of the necessary equipment and program development procedures can be found in the following sections of this Appendix, while more detailed instructions explaining the use of the Class 8010 Type SCP-115 Deluxe CRT Executive Tape for programming the Type SCP-544 processor, can be found in Instruction Bulletin 30598-304-XX.

There are in effect two methods of developing and programming the Type SCP-544 processor. The first and recommended method is described in Sections C.2.2 thru C.2.6. This method allows you to run the entire control program while it is being debugged and before its PROM memory chip is programmed (burned-in). The second and more cumbersome method involves initially programming just the PROM portion of the program then transferring it onto PROM memory chip and later INSERTING the unprotected ladder into the RAM memory of the SCP-544 processor. This latter method does not provide for full system checkout prior to programming (burning-in) the PROM memory chip.

C.2.2 PROGRAM DEVELOPMENT EQUIPMENT

The following equipment is required to program the Class 8020 Type SCP-544 Processor in addition to the equipment which is already present in a typical SCP-544 processor system:

1 — Class 8010 Type SPR-300, 310 Deluxe CRT Programmer
1 — Class 8010 Type SFW-115 Deluxe CRT Executive Tape
1 — Class 8020 Type SCP-521, 522, or 523 RAM Processor
1 — Class 8881 Type CC-4 CRT/PROM Programmer Cable
1 — Data I/O Corp. Model 21A or 22B PROM Programmer

C.2.3 PROGRAM DEVELOPMENT PROCEDURES

The operating control program must be initially developed in the RAM version of the Model 500 Processor (Class 8020 Type SCP-521, 522, or 523). The program can then be run and modified as desired. Only when the program is fully operational should the PROM portion be transferred to the PROM memory chip. To accomplish this transfer, a Class 8010 Type SPR-300 or 310 Deluxe CRT Programmer and a Data I/O Corp. Model 21A or 22B PROM Programmer must be available.

Once the control program is complete, a cartridge tape (Class 8010 Type SLR-120) of the entire program should be generated for future use, as well as one containing just the PROM portion of the program. This is accomplished by connecting a Deluxe CRT Programmer (Class 8010 Type SPR-300, 310) to the RAM processor by utilizing functions of the TAPE MODE. For details on the TAPE MODE operations refer to Section 9 of the Deluxe CRT Programmer Instruction Bulletin 30598-167-XX.

The Class 8010 Type SFW-115 Executive Tape provides the means of programming the PROM memory chip in the Class 8020 Type SCP-544 processor. This executive tape is initially loaded into the OFFLINE memory of the SPR-300, 310 Deluxe CRT Programmer. Next the **PROM portion** of the control program should be loaded into OFFLINE memory. The executive translates the ladder rungs, rack addressing, and labels into standard Motorola HEX-ASCII form for use with the DATA I/O EPROM burner.

The translated program may then be sent directly to the DATA I/O Model 21A or 22B EPROM programmer (note Models 29A or 121A will **not** work) or saved on a cartridge tape to be loaded at another time into the EPROM programmer. This program which is stored on cartridge tape may be loaded into the DATA I/O EPROM programmer using the Class 8010 Type SPR-300, 310 or Class 8010 Type SLR-100 Cartridge tape loader/recorder.

The DATA I/O EPROM programmer which contains an erased 27128 PROM chip, can then be used to program the PROM chip. The Square D part number for the 27128 PROM chip is 27915-59034. This procedure is described on

pages 7 and 10 of the Class 8010 Type SFW-115 Executive Tape Instruction Bulletin.

C.2.4 PROM CHIP INSTALLATION

Once programmed, the PROM chip must be removed from the EPROM programmer and physically transferred to the PROM memory socket of the Type SCP-544 Processor. The PROM chip socket is accessible from the right-hand side of the processor. On the underside of the access door is a label that illustrates the PROM chip orientation. See Figure C.2. The PROM chip fits into a 28-pin socket. The Type SCP-544 Series I or later processor will contain a ZIF (Zero Insertion Force) socket, earlier series will not.

NOTE: The PROM chip must be installed with the notch towards the bottom of the processor.

If the PROM chip is inserted improperly or not installed at all, the processor will generate error 30300 in the Error Code Control Register 8175.

CAUTION

Use care when handling the UV PROM memory chips. They are susceptible to damage from static electricity. When removing/inserting or otherwise handling these chips, avoid working in carpeted areas. In all cases, avoid touching the pins of the chip. Where possible, work on a conductive surface (such as a metal work benchtop) and/or wear a wrist grounding strap.

Avoid bending the pins of the UV PROM chips and keep the pins clean so that proper pin/socket contact is maintained.

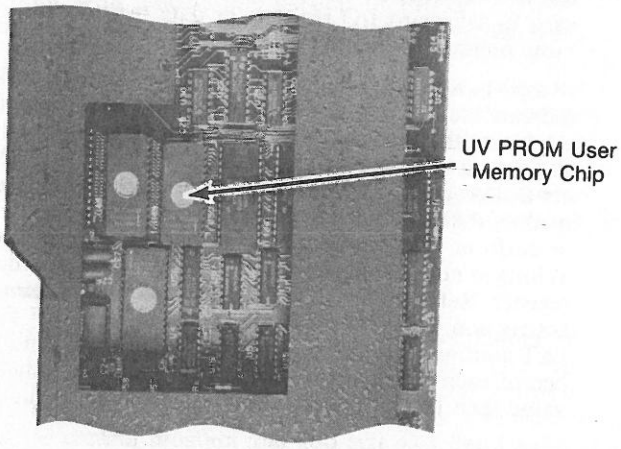

Figure C.2 — Type SCP-544 Processor PROM Memory Chip Socket

C.2.5 LOADING A TAPE

The Class 8020 Type SCP-544 Processor along with the Class 8010 Type SPR-300 Deluxe CRT Programmer provide unique cartridge tape capabilities. These are described in the following paragraphs. For detailed information regarding the function of the Tape Mode feature, refer to Section 9 of the Deluxe CRT Programmer Instruction Bulletin.

Since the Class 8020 Type SCP-544 Processor does not have on-board programming capability of the UV PROM memory, the UV PROM control program cannot be entered by means of the Deluxe CRT programmer. This insures that no changes can be made to the UV PROM control program.

One essential requirement of the tape load function is that the control program which is in the processor PROM memory must match the PROM portion on tape or the load will not take place. This is for protected rungs only. Any number of RAM rungs may be appended or deleted so long as the critical boundaries shown in Figure C.3 are not crossed.

When a tape load of a program to a Type SCP-544 is attempted, the protected portion of the cartridge tape **must** match that which is in PROM memory. This provides the O.E.M./user with an additional level of security. As the cartridge tape is loaded, the Type SCP-544 processor compares its protected ladder to that which is on tape until the first program inhibit rung is encountered. The additional unprotected ladder is loaded into memory up to the MARK ST SUB rung. The comparison between protected subroutines and the tape begins and continues until the second and final program inhibit rung is found. The unprotected subroutines, after that inhibit rung, is then loaded into memory.

NOTE: If your program does not include subroutines, the MARK ST SUB rung and all rungs following it, including the second inhibit rung, should **not** be programmed.

The ladder and subroutine rungs from both control programs will be numbered sequentially. A processor error will result if an attempt is made to load cartridge tape, before a UV PROM program exists within the Type SCP-544 Processor.

C.2.6 CONTROL PROGRAM CONFIGURATION

Since the Class 8020 Type SCP-544 is comprised of two memory types, UVPROM and RAM, it requires special configuration considerations when developing the control program. The control program must be structured to conform to these configuration parameters. Once the entire program is developed and programmed on a RAM version Model 500 Processor, it can be transferred to the SCP-544 processor using the procedure described in Section C.2.3. The control program rung configuration of the RAM/PROM memory processor is as shown in Figure C.3. If your program does not include subroutines, the MARK ST SUB rung and all rungs following it, including the second inhibit rung, should not be programmed.

NOTE: Throughout the following discussion the words "PROM" and "protected" will be used interchangeably as well as the words "RAM" and "unprotected".

Rack Addressing

To begin the development of the control program it is first necessary to define your system. This is accomplished by reviewing your system layout and determining your addressing scheme. The next step is to assign addresses to the respective modules based on the rack addressing rules described in the instruction bulletins for the interface and register modules. The description for the actual programming procedure for rack addressing is found in the CRT programmer instruction bulletins.

Programming your rack addressing into memory is your first programming step. Your entire rack address scheme should be placed in PROM memory, only allowing for remote racks (drops) to be added later by addressing them in RAM memory. It is important to remember that RACK ADDRESSING requires some user memory to store addressing information. For each rack assigned, i.e. CPU and remote racks, one word of memory is required. Plus each assigned ending slot address requires one word of memory. For example, a system consisting of a CPU rack containing

a processor and three register modules require 5 words of user memory for RACK ADDRESSING.

Memory Type	Control Program Configuration
PROM	RACK ADDRESSING
RAM	RACK ADDRESSING
PROM	SAFEGUARD RUNG PROTECTED LADDER RUNGS INHIBIT RUNG
RAM	ADDITIONAL LADDER RUNGS
PROM	MARK ST SUB RUNG TIMED INTERRUPT SUBROUTINE OPTIONAL PROTECTED SUBROUTINES INHIBIT RUNG
RAM	ADDITIONAL SUBROUTINES

Figure C.3 — Control Program Configuration

PROM Safeguard Rung (see also Section 10)

It is essential that the first rung of your control program be the safeguard rung. This rung provides I/O, register, and communication channel protection (referred to as safeguarding), such that the RAM portion of the program cannot influence the PROM program and override its functioning.

To utilize safeguarding, the first rung in PROM memory must follow the program format of a Transitional LET command utilizing Control Register 8165. A conditional contact must not be programmed in this rung.

The equal sign (=) must be followed by 8 numbers. If the user does not need to set some of these parameters, zeros must be inserted instead of the numbers. Each number must be separated by a semicolon (;). The rung is configured as follows:

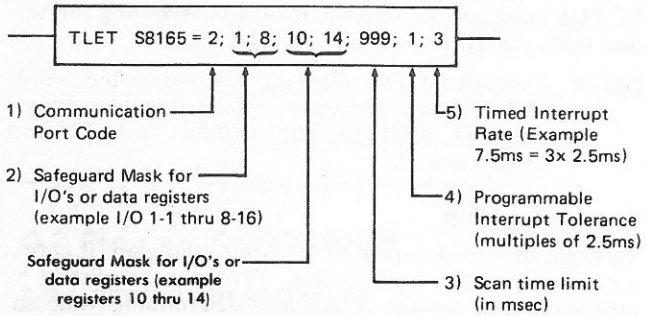

Figure C.4 — Safeguard Rung

1) Communication Port

The first number is the communication port SAFEGUARD code. This code is a decimal number from 0 to 3 which prevents programming communication (READ, WRITE, ALARM) and PRINT commands in the RAM control program. (Example: When code 2 is selected, no communications or PRINT rung containing channel 2 can be used in the RAM control program.

Error 49 will result if such an attempt is made.) Figure C.5 contains values for the different communication port combinations.

CODE	SAFEGUARD COMMUNICATION PORT
0	NEITHER PORT SAFEGUARDED
1	PROGRAMMER (CHNL 1) PORT SAFEGUARDED
2	COMMUNICATION (CHNL 2) PORT SAFEGUARDED
3	BOTH PORTS SAFEGUARDED

Figure C.5 — Communication Port Safeguard Codes

2) I/O and Data Registers

The second and third numbers, as well as the fourth and fifth numbers, are used as safeguard masks for I/O registers or data registers. The second and third decimal numbers indicate the first group of registers to be safeguarded, while the fourth and fifth decimal numbers indicate the second group of registers to be safeguarded. These numbers act as boundaries for the safeguarded register group. These numbers must be separated by a semicolon.

I/O register address numbers within the safeguard boundaries will be prevented from being used as a coil in the RAM control program. If an attempt was made to use a safeguarded I/O register address as a coil in the RAM control program, Error 49 will be displayed on the programmer. The address can be programmed as a contact in the RAM control program if program interaction is desired.

The second group of safeguard masks, which are the fourth and fifth numbers of this safeguard rung, can be used to safeguard I/O registers or data registers in the same manner as the first group.

If used to safeguard data registers, the numbers would indicate the first and last data registers to be safeguarded. Using these parameters, the processor will prevent these data registers from being altered by the RAM control program. Safeguarded registers can be programmed in RAM to make logical decisions (IF command) or perform math operations using the LET command, as long as no attempt is made to change the safeguarded register. Refer to the CRT and Hand-held Programmer Instruction Bulletins for more information on IF and LET commands. It should be noted that the first number of each safeguard mask group must be a smaller value than that of the second number of that group.

3) Scan Limit

The sixth decimal number indicates the scan time limit (in msec). If the scan time in milliseconds exceeds this limit, the processor will HALT. However, in no case will the scan time be allowed to exceed 32.765 seconds. Permissible values range from 1 to +32767.

4) Tolerance Limit

The seventh decimal number indicates the tolerance of the timed interrupt. See Section 14.4.4 of this bulletin or Section 6 of the CRT programmer instruction bulletin for an explanation of the Timed Interrupt function. The timed interrupt function can be initiated at any point in the processor scan because it depends only on

time. But if the interrupt comes in during the processing of a rung, certain functions, as dictated by the rung, must be accomplished or data may be lost. This is especially true for data rungs (IF, LET, MATRIX, etc.). To insure that time is allowed to **finish** the longest (time wise) rung in the program, an interrupt tolerance number is programmed. This decimal number can range from 1 to 32,767 (2.5ms to 82 seconds). Each number represents intervals of 2.5ms. (Example; 1 x 2.5ms = 2.5ms tolerance factor.) If the processor cannot initiate a timed interrupt because the tolerance programmed is less than the rung processing time, the processor will halt with a 29102 error. If a zero is entered, the tolerance is assumed to be 1.

5) Timed Interrupt Rate

The eighth decimal number specifies the interrupt rate for the timed interrupt subroutine. The number represents an interval of 2.5 milliseconds with the range of the interrupt rate value lying between 3 and 32,767 (7.5ms to 82 seconds). That is, the number entered into this rung multiplied by 2.5ms determines the timed interrupt rate. (3 x 2.5ms = 7.5ms rate.) The rate must be zero or greater than 2. A zero disables the timed interrupt. See Section 14.4.4 of this bulletin or Section 6 of the deluxe CRT Programmer Instruction Bulletin for an explanation of the Timed Interrupt function.

PROM Protected Ladder

Once the safeguard rung has been programmed, the PROM ladder diagram program can then be entered into memory. This portion of the program consists mainly of ladder logic. Along with ladder, this portion of PROM memory may contain jump statements (for example, GOSUBs) that allow the user to alter the sequence in which the control program is being processed. This GOSUB instruction calls a subroutine with the same location marker from the subroutine area. It then returns back to the point where the control program processing was initially interrupted and continues to scan the ladder program. These GOSUB instructions can call subroutines located in PROM or RAM subroutine designated program areas.

Program Inhibit Rung

The last rung programmed in the protected ladder portion of PROM must be a program inhibit rung. The Program Inhibit Rung is comprised of a single coil with address 8176-16. This rung indicates the end of the PROM portion of the control program and also acts as a flag for the positioning of the RAM portion of the program. This rung prevents the programming equipment from entering additional rungs into PROM memory.

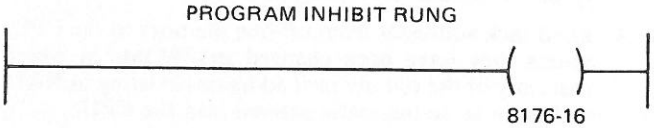

Figure C.6 — Program Inhibit Rung

RAM Unprotected Ladder

The RAM "unprotected" ladder rungs are programmed immediately following the first program inhibit rung. Any I/O register address number placed within the PROM Safeguard Rung's boundaries must not be used as a coil in this portion of the program.

Within the RAM "unprotected" ladder program, subroutine calls, using GOSUB instructions, can be made to unprotected subroutines in RAM memory and protected subroutines in PROM memory. GOSUB or GOTO instructions cannot use MARK instructions numbers above 8000 in RAM ladder program.

PROM Protected Subroutines

The PROM control program is divided into two areas: the ladder program area, aforementioned, and the subroutine area. A MARK ST SUB (STart SUBroutine) instruction is used to distinguish these two areas and must be programmed immediately following the RAM unprotected ladder.

If used, the Timed Interrupt Subroutine precedes the programming of all other subroutines. MARK 8190 starts the timed interrupt subroutine and must be programmed as the first rung following the MARK ST SUB rung. All the rungs of the Timed Interrupt program follow and the timed interrupt must be ended by an RTN 8190 rung.

Once the Timed Interrupt RTN 8190 rung is programmed, it is then possible to program other protected subroutines. These subroutines are either called from protected mainline ladder in PROM memory or from unprotected ladder in RAM memory. The protected subroutine rungs would then be added, followed by a RTN (return) instruction also incorporating the same unique number as the MARK. See Figure C.7 for a program example.

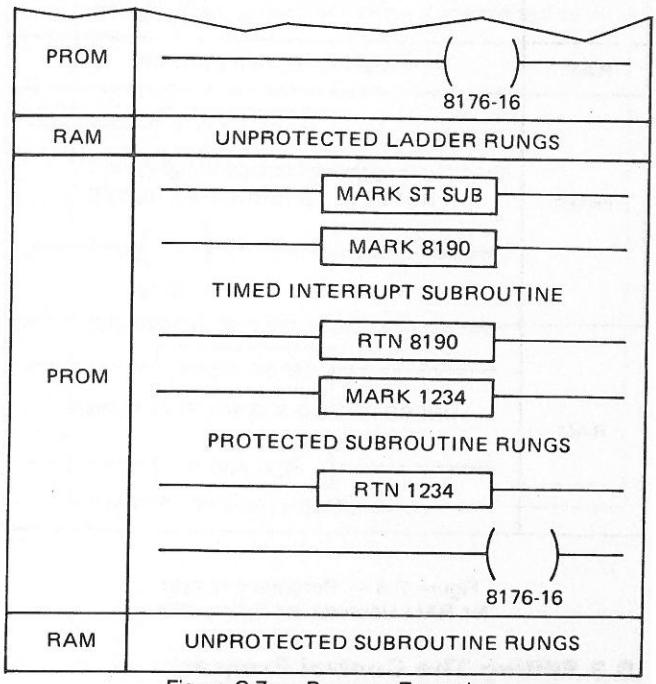

Figure C.7 — Program Example for PROM Subroutines

NOTE 1: No PROM rungs should exist between the Program Inhibit Rung and the MARK ST SUB rung.

NOTE 2: Timers should not be programmed within a Timed Interrupt subroutine because the timer will not update.

NOTE 3: Subroutines, consisting of a MARK and its corresponding RTN rung cannot be programmed inside a Timed Interrupt.

Program Inhibit Rung

The last rung programmed in the PROM protected subroutine program must be a Program Inhibit rung. This rung is comprised of a single coil addressed with Control Register 8176 Bit 16. Same rung shown in Figure C.6. This rung prevents the programming equipment from entering additional rungs into PROM memory.

RAM Unprotected Subroutines

The RAM "unprotected" subroutines are programmed immediately following the second program inhibit rung. These subroutines can be called from (and returned to) protected mainline ladder in PROM memory, unprotected ladder in RAM memory or from the timed interrupt subroutine in PROM memory.

Once the last unprotected subroutine rung is loaded into RAM memory, it will be seen as the last rung in the entire RAM/PROM control program. Refer to Figure C.3 for the control program structure or to Figure C.8. for a program example.

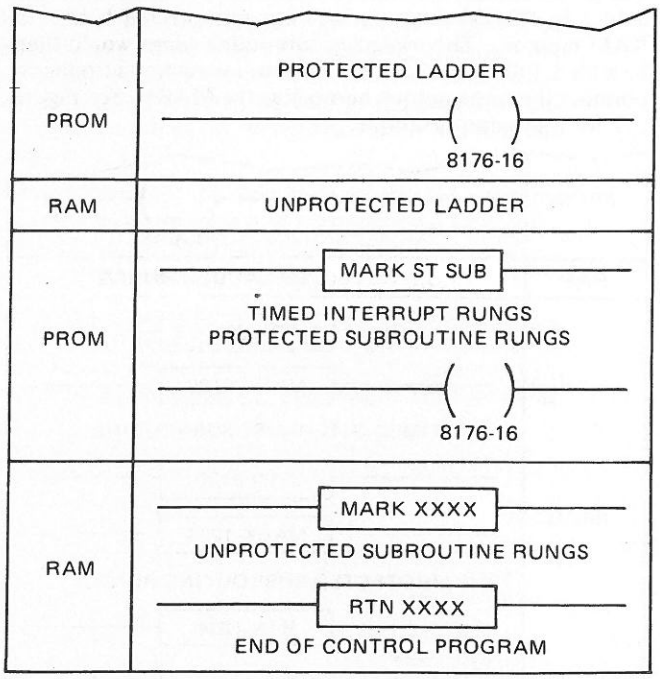

Figure C.8 — Program Example for RAM Unprotected Subroutines

C.3 Editing The Control Program

The RAM memory portion of the control program can be altered using any of three methods: (1) tape load, (2) OFFLINE memory transfer via the Deluxe CRT Programmer, or (3) programming and/or editing directly through the use of a programmer and the Type SCP-544 processor. The PROM portion of memory can only be altered by replacing the PROM memory chip.

C.3.1 EDITING RAM MEMORY

If program changes and/or additional "unprotected" ladder is desired, and the protected portion of the tape matches that which is in PROM memory, three methods to revise the RAM portion of the program are available. When editing the RAM program (i.e. unprotected ladder and subroutines), it is important to note the control program structure shown in Figure C.3.

1. A normal tape load of the revised control program can be made via the Deluxe CRT programmer. It should be noted that a tape load via the Deluxe CRT programmer will first clear memory so that the existing program in RAM is lost.
2. Revisions to the RAM "unprotected" ladder/subroutine program can be made in the OFFLINE memory of the Deluxe CRT programmer. This provides an easy transfer from the OFFLINE memory into the CPU memory of the Type SCP-544 processor. The memory transfer operation in the Deluxe CRT programmer will allow the entire OFFLINE memory or just certain rungs to be transferred. Refer to Section 10 of the Deluxe CRT Programmer Instruction Bulletin 30598-167-01 for detailed memory transfer instruction.
3. When directly programming and/or editing the "unprotected" ladder rungs into RAM memory of the processor, it is necessary to use the INSERT function. The revised "unprotected" ladder program must be inserted into the control program immediately following the first program inhibit rung and just ahead of the MARK ST SUB rung in the protected subroutine are of PROM memory.

The editing of the RAM "unprotected" subroutines is a much simpler process than the insertion of RAM ladder rungs because the "unprotected" subroutine rungs are added immediately following the entire control program (i.e. following the final program inhibit rung).

C.3.2 EDITING PROM MEMORY

To edit the PROM portion of memory it is necessary to remove the original PROM chip and replace it with a new PROM chip containing the revised control program. The procedure for programming the new PROM chip is described in Sections C.2.3 to C.2.6.

If the PROM chip was changed so that the new ladder program differs from the original, additional steps must be taken to reload the original RAM program back into the processor memory.

1. Record the existing program (RAM & PROM) on tape.
2. After the new PROMs are installed, a clear all should be done using the following keystroke sequence: RACK ADDR, SEARCH, ESCAPE, DELETE, CLR ALL, CLR ALL.
3. Load the existing program from tape to off-line memory of the Deluxe CRT programmer.
4. Load rack addresses from off-line memory to the CPU, unless they have been changed in PROM. In which case, any of the remote rack addresses existing in RAM will have to be manually entered into the CPU.
5. Load only the RAM ladder rungs from off-line memory into the CPU. See Section 9.5 of the Deluxe CRT Programmer Instruction Bulletin for details on memory transfer instructions.
6. Load RAM subroutines from off-line memory to the CPU.
7. Make a tape of the entire program.

Program Inhibit Rung

The last rung programmed in the PROM protected subroutine program must be a Program Inhibit rung. This rung is comprised of a single coil addressed with Control Register 8176 Bit 16. Same rung shown in Figure C.6. This rung prevents the programming equipment from entering additional rungs into PROM memory.

RAM Unprotected Subroutines

The RAM "unprotected" subroutines are programmed immediately following the second program inhibit rung. These subroutines can be called from (and returned to) protected mainline ladder in PROM memory, unprotected ladder in RAM memory or from the timed interrupt subroutine in PROM memory.

Once the last unprotected subroutine rung is loaded into RAM memory, it will be seen as the last rung in the entire RAM/PROM control program. Refer to Figure C.3 for the control program structure or to Figure C.8. for a program example.

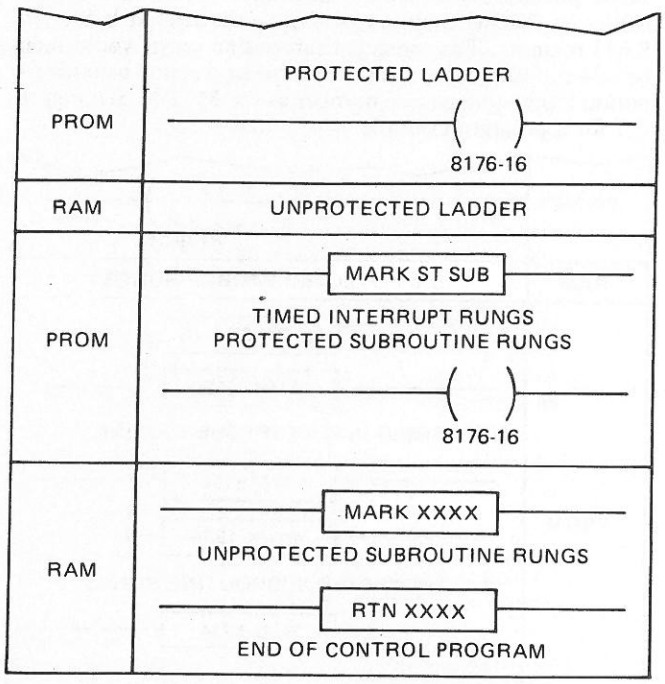

Figure C.8 — Program Example for RAM Unprotected Subroutines

C.3 Editing The Control Program

The RAM memory portion of the control program can be altered using any of three methods: (1) tape load, (2) OFFLINE memory transfer via the Deluxe CRT Programmer, or (3) programming and/or editing directly through the use of a programmer and the Type SCP-544 processor. The PROM portion of memory can only be altered by replacing the PROM memory chip.

C.3.1 EDITING RAM MEMORY

If program changes and/or additional "unprotected" ladder is desired, and the protected portion of the tape matches that which is in PROM memory, three methods to revise the RAM portion of the program are available. When editing the RAM program (i.e. unprotected ladder and subroutines), it is important to note the control program structure shown in Figure C.3.

1. A normal tape load of the revised control program can be made via the Deluxe CRT programmer. It should be noted that a tape load via the Deluxe CRT programmer will first clear memory so that the existing program in RAM is lost.
2. Revisions to the RAM "unprotected" ladder/subroutine program can be made in the OFFLINE memory of the Deluxe CRT programmer. This provides an easy transfer from the OFFLINE memory into the CPU memory of the Type SCP-544 processor. The memory transfer operation in the Deluxe CRT programmer will allow the entire OFFLINE memory or just certain rungs to be transferred. Refer to Section 10 of the Deluxe CRT Programmer Instruction Bulletin 30598-167-01 for detailed memory transfer instruction.
3. When directly programming and/or editing the "unprotected" ladder rungs into RAM memory of the processor, it is necessary to use the INSERT function. The revised "unprotected" ladder program must be inserted into the control program immediately following the first program inhibit rung and just ahead of the MARK ST SUB rung in the protected subroutine are of PROM memory.

The editing of the RAM "unprotected" subroutines is a much simpler process than the insertion of RAM ladder rungs because the "unprotected" subroutine rungs are added immediately following the entire control program (i.e. following the final program inhibit rung).

C.3.2 EDITING PROM MEMORY

To edit the PROM portion of memory it is necessary to remove the original PROM chip and replace it with a new PROM chip containing the revised control program. The procedure for programming the new PROM chip is described in Sections C.2.3 to C.2.6.

If the PROM chip was changed so that the new ladder program differs from the original, additional steps must be taken to reload the original RAM program back into the processor memory.

1. Record the existing program (RAM & PROM) on tape.
2. After the new PROMs are installed, a clear all should be done using the following keystroke sequence: RACK ADDR, SEARCH, ESCAPE, DELETE, CLR ALL, CLR ALL.
3. Load the existing program from tape to off-line memory of the Deluxe CRT programmer.
4. Load rack addresses from off-line memory to the CPU, unless they have been changed in PROM. In which case, any of the remote rack addresses existing in RAM will have to be manually entered into the CPU.
5. Load only the RAM ladder rungs from off-line memory into the CPU. See Section 9.5 of the Deluxe CRT Programmer Instruction Bulletin for details on memory transfer instructions.
6. Load RAM subroutines from off-line memory to the CPU.
7. Make a tape of the entire program.

APPENDIX D — FEATURES OF THE REVISION 7, SERIES M (and later) MODEL 500 PROCESSOR

The following features and sections referenced in this instruction bulletin apply only to Revision 7, Series M (and later) Model 500 Processors.

FEATURES	RELEVANT SECTIONS	COMMENTS
a. Block READ/WRITE register count up to 128.	9.0	Earlier series processors support a maximum count of 64.
b. Expanded security features.	10.0-10.11	Only sections 10.8 through 10.11 apply to earlier series processors.
c. Compatibility with the Local/Remote Transfer Interface System (8030 CRM-230/232).	2.0	Earlier series processors are not compatible.
d. Execution time of GOTO instruction is 2.6 μsec.	12.2, Appendix A	Executed in earlier series processors in 57 μsec.
e. Register 8164 increments every 2.5 msec.	13.2	Unavailable in earlier series processors.
f. Register 8166 specifies a minimum scan time.	13.2	Unavailable in earlier series processors.
g. Preemptive port/route edit lock-out bit (8176-15).	10.4, 13.2	Unavailable in earlier series processors.
h. Maximum user-defined scan time is now 32.765 sec. (register 8167).	13.2	Earlier series processors allow a maximum of 1 sec.
i. Automatic communications time-out monitor (register 8168).	9.0, 13.2	Unavailable in earlier series processors.
j. Enhanced PRINT command formats (registers 8001-8005).	13.2	Unavailable in earlier series processors.
k. Error codes 900, 901 indicating register corruption.	B.1.3	Unavailable in earlier series processors.
l. The following expanded instruction set: Absolute value Negate Indirect register read Accumulator manipulations Identify number type Random number generator	2.2, 15.0	Unavailable in earlier series processors.

NEED HELP WITH A
SY/MAX PROGRAMMABLE CONTROLLER PROBLEM?
Class 8010, 8020, 8030, 8040

- Troubleshooting Help
- Repair Parts Shipment
- Field Service

During normal business hours, call your local Square D Field Office or SY/MAX Stocking Distributor for assistance. **If you have a breakdown requiring *EMERGENCY SERVICE* after regular business hours, on weekends, or on holidays, call the phone number listed below.** Calling this number will alert a factory expert who will call you back to help with troubleshooting problems or make arrangements for Repair Parts Shipment and Field Service.

Before calling, be ready to provide complete identification information including class and type number, series number and serial number (if any). When ordering repair parts or requesting field service assistance, be prepared to supply a purchase order number and other ordering information (such as shipping information, special airfreight routing, etc.)

CALL (414) 332-9960

INSTRUCTION MANUAL

SHARPLES-STOKES
FUSELESS PANEL DRIVE

SPINDLEMATE™

CMC CLEVELAND MACHINE CONTROLS

CLEVELAND MACHINE CONTROLS, INC.
WESTERN OPERATIONS
ONE KELLY COURT, MENLO PARK, CALIFORNIA 94025
PHONE (415) 328-2640 • TELEX 34 5521

WARNING

This equipment is at line potential any time the incoming line power disconnect is closed even if the motor is not rotating. AC power must be disconnected (all phases) before it is safe to touch any internal parts of this equipment.

CORPORATE HEADQUARTERS
7550 HUB PARKWAY, CLEVELAND, OH 44125
PHONE: (216) 524-8800 TELEX: 98-5613

SS-00-781C

TABLE OF CONTENTS

SECTION	
	RECEIVING, HANDLING & STORAGE
1.0	GENERAL DESCRIPTION
2.0	INSTALLATION
3.0	STARTUP & ADJUSTMENT
4.0	THEORY OF OPERATION
5.0	MAINTENANCE & TROUBLESHOOTING
6.0	DRAWINGS
7.0	DATA SHEET

RECEIVING, HANDLING & STORAGE

Receiving

The equipment must be placed under adequate cover immediately upon receipt as packing cases are not suitable for outdoor or unprotected storage.

Examine the shipment carefully upon arrival and check items with the Packing List. Any shortage or damage should be reported promptly to the carrier and to the nearest CMC sales office.

Storage

If equipment is not being installed immediately, it should be stored in a clean, dry location. Precautions should be taken to prevent moisture from accumulating in the equipment. Moisture, dust or dirt is detrimental to the equipment operation.

WARNING: THIS EQUIPMENT SHOULD BE INSTALLED, ADJUSTED AND SERVICED BY QUALIFIED PERSONNEL FAMILIAR WITH ELECTRICAL EQUIPMENT AND THE CONTENTS OF THIS MANUAL.

DO NOT SERVICE MOTOR UNLESS ALL POWER IS OFF. VOLTAGE MAY BE PRESENT EVEN THOUGH MOTOR SHAFT IS NOT ROTATING.

1.0 GENERAL DESCRIPTION

1.1 MEET THE SPINDLEMATE™

The CMC SPINDLEMATE Controller is designed specifically for use with standard shunt-wound DC motors in machine tool spindle drive applications. It provides a system which combines the high torque characteristics of a DC motor at low speed with operation well above base speed at constant horsepower. A three-phase full-wave (6 pulse) regenerative SCR (silicon controlled rectifier) power bridge is utilized in the armature power circuit for fast response, controlled stops and excellent current form factor. This type of configuration allows direct line operation without the need for an isolation power transformer or output "overlap" inductor.

Available in four sizes, the SPINDLEMATE is MTD (machine tool duty) rated for optimum match to the machine application. The regenerative feature of the controller provides four-quadrant power flow in response to low-level analog commands from the CNC or operator controls. A built-in field regulator automatically weakens the motor shunt field in the constant horsepower range of operation and is used for field economizing at idle periods. Speed feedback is from a motor-mounted DC tachometer. Comparator circuits with optically coupled transistor outputs are provided for low-speed and set speed detection. These outputs can be directly connected back to the CNC or relay interfaced for interlock functions such as controlled stop, feed enable, gear shift speed, etc. A third (AUX) comparator can be tailored to a specific machine function via circuit board jumper matrix.

The SPINDLEMATE's compact design requires a minimum of panel space while its modular construction provides straightforward maintainability. Power and control circuit subassemblies are easily replaceable. Control circuitry is incorporated onto two main plug-in printed wiring boards to minimize spares requirements and simplify adjustment. Diagnostic aids include status and latching fault LED's and a connector is provided for an optional tester.

Each SPINDLEMATE incorporates the following standard features:

- 3Ø, Full-Wave (6 pulse) Regenerative SCR Bridge
- Machine Tool Rated (MTD)

  150% Torque - 15 min.
  200% Torque - 1 min.
- Phase Sequence insensitive
- 50/60 Hz operation - jumper connectable.
- Integral shunt field regulator for wide speed range.
- Motor shunt field economizing to minimize heating at idle periods.
- Full time inner current loop.
- Low level control circuitry - no high voltage on main control circuit boards.
- Optoisolated speed comparator output signals
- Motor armature current and voltage output signals
- Controlled acceleration/deceleration
- Single-ended or differential inputs
- Tachometer feedback (or BEMF feedback without field range)
- Status and Fault LED indicators
- Small size/modular construction
- Plug-in circuit boards
- Provision for plug-in tester
- Serviceability - circuit boards hinged to provide access to SCRs and other chassis components.
- SCR snubbers and ferrite line reactors for dv/dt and di/dt protection
- Easily removable SCR subassemblies

1.2 SPECIFICATIONS, SPINDLEMATE CONTROLLER

Horsepower MTD*	Horsepower Cont.	Spindlemate Model	Cont. Rated Line Amps	Cont. Rated Arm. Amps	Unit Size
240V MODELS					
7-1/2	5	SP 1240-5A	18	17.7	A ⊛
10	7-1/2	SP 1240-7.5A	27	28.1	A ⊛
15	10	SP 1240-10A	34	36.6	A ⊛
22-1/2	15	SP 1240-25A	49	55.1	A ⊛
30	20	SP 1240-20B	62	70.5	B
37-1/2	25	SP 1240-25B	79	91.1	B
45	30	SP 1240-30C	89	107	C
60	40	SP 1240-40C	114	138	C
75	50	SP 1240-50C	145	175	C
90	60	SP 1240-60C	170	205	C
100	75	SP 1240-75C	211	256	C
125	100	SP 1240-100D	284	345	D
150	125	SP 1240-125D	349	425	D
500V MODELS					
7-1/2	5	SP 1500-5A	11	8.4	A ⊛
10	7-1/2	SP 1500-7.5A	15	13.2	A ⊛
15	10	SP 1500-10A	18	17.2	A ⊛
22-1/2	15	SP 1500-15A	25	25.2	A ⊛
30	20	SP 1500-20A	33	35.1	A ⊛
37-1/2	25	SP 1500-25A	39	42.7	A ⊛
45	30	SP 1500-30A	45	50.4	A ⊛
60	40	SP 1500-40B	58	65.4	B
75	50	SP 1500-50B	73	83.7	B
90	60	SP 1500-60C	80	97.4	C
100	75	SP 1500-75C	105	123	C
125	100	SP 1500-100C	135	161	C
150	125	SP 1500-125C	170	202	C
180	150	SP 1500-150C	200	240	C
300	200	SP 1500-200D	270	323	D
375	250	SP 1500-250D	332	399	D

* MTD indicates "Machine Tool Duty"
⊛ Indicates Size B with optional integral tester

1.2 SPECIFICATIONS (Cont'd)

		240V Models	500 V Models
1.	AC Input Power 3Ø, 50/60 Hz	230 VAC ±10%	460 VAC ±10%
2.	Armature Output Voltage	0 to ±240 VDC	0 to ±500 VDC
3.	Field Voltage	150 VDC Nominal	300 VDC Nominal
4.	Armature Current Rating (See table, P. 1-3)	100% Rated Continuous 150% Rated 15 Min. 200% Rated 1 Min.	
5.	Field Current Rating	10 Amp., Max.	
6.	Field Control Range	4 : 1	
7.	Ambient Temperature Operating Storage	 55°C 85°C	
8.	Altitude	3300 Feet max. without derating	
9.	Cooling Size A Sizes B, C & D	 Convection Fan-Cooled	
10.	Input Command Scale Factor	0 to ±10 VDC Nominal (Can be ± 5 or ±7.5)	
11.	Tachometer Scale Factor	±7 VDC per 1000 RPM min. ±200 VDC max. at full speed without special scaling.	
12.	Input Impedance	10K, Min.	
13.	Reference Voltages Avail. (50 ma max. each)	±12V Regulated ±24V Unregulated	

14. Module Size

A	10-1/2X x 11-1/2H x 9-1/4D
B	10-1/2W x 18-1/8H x 9-1/4D
C	13W x 20-1/2H x 11-1/4D
D	22-1/2W x 32H x 15D

15. Output Signals

Armature Current	+10V @ 150% Rated Current
Armature Voltage	±8V @ Rated Voltage
Fault Interlock Relay	Form C Contacts
Speed Comparators	Set Speed
(Opto-Isolated Transistors)	Low Speed
	Aux. Speed

16. Terminals

Control and Signal	Tubular Screw type terminal blocks
Power, Sizes A & B	Tubular screw type terminals
Power, Size C & D	Bus bars

17. Adjustments

Stability	10:1 range	Acceleration	0.5 to 5 sec.
Torque	0 to 200%	Set Speed	1/2% of Max Speed
IR Comp	With BEMF FB	Low Speed	1/2% of Max Speed
Max Speed		Aux.	

1.3 PROTECTIVE FEATURES

Reference voltage and field power fusing	Overvoltage (armature)
	Tachometer Loss
Phase Loss	Field Current Loss
Overtemperature	Static Overcurrent
Overspeed (Tachometer)	Stall Current Limit

1.4 DIAGNOSTIC FEATURES

Status LEDs

AC Power On
±12 VDC Reference Voltages
Ready (No Fault)
Drive On (Enable circuit closed)

Fault LEDs

- Phase Loss
- Overtemperature
- Overspeed (Tachometer)
- Overvoltage (Armature)
- Tachometer Loss
- Field Current Loss
- Static Overcurrent
- Stall Current

All except Stall Current Limit latch the controller off with the LED on until reset. Reset is accomplished by momentarily connecting TB1-17 +24V or by removing and re-applying power.

Optional Plug-In Tester Functions

An optional plug-in tester is available. The tester plugs into one of the connectors on the main PC board assembly. A selector switch on the tester accesses twelve circuit points on the SPINDLEMATE and indicates the relative signal level on a bar-graph LED display with a full scale of 150%.

OPTIONAL PLUG-IN TESTER FUNCTIONS

SWITCH POSITION	CIRCUIT CHECK	SWITCH POSITION	CIRCUIT CHECK
1	Line Voltage, L1 to L2	7	Speed Command
2	Line Voltage, L2 to L3	8	Tachometer Voltage
3	Line Voltage, L1 to L3	9	+12 Volt Ref. Voltage
4	Shunt Field Current	10	-12 Volt Ref. Voltage
5	Armature Voltage	11	Current Command
6	Armature Current	12	Torque Limit Setting

1.5 CONTROLLER COMPONENT DESCRIPTION

The following is a brief functional description of the major SPINDLEMATE assembly components.

Refer to Figures 1-1 through 1-4 for component location and Figure 1-5 for circuit interconnection.

a) Main Circuit Board Assemblies, A1 and A2

The two main circuit board assemblies contain most of the electronic components and circuitry necessary to operate the controller.

The boards are mounted back-to-back and interconnect at connector J7.

Major functions of the Control Board, A1, are:

1) Speed and current regulator circuits

2) User adjustments

3) Interlock circuitry to prevent controller turn-on unless operating parameters are correct and to turn off the controller if an abnormal condition develops.

4) Status and Fault LED indicators

5) Speed comparator circuits with opto-isolated outputs.

Major functions of the Logic and Firing Board, A2, are:

1) Line synchronization circuits

2) SCR firing pulse generation, distribution and amplifier circuits

3) Output current polarity steering logic

4) Field current regulator and adjustments

5) ±12 volts and ±24 volt power supplies

b) Field Isolator & Interlock Circuit Board, A3

Since there is no high voltage on the two main circuit board assemblies (these circuits are referenced to signal common), isolation is required between the high voltage field regulator power circuit and the control circuitry located on assembly A2. This isolation function is accomplished on the Field Isolator & Interlock Assembly, A3. It is located at the inside bottom part of the chassis on Size A and B controllers; inside top of Size C & D controllers. It transformer couples shunt field current as measured across a series resistor and SCR gate firing signals to the field power module. A3 also functions as a mounting location for the fault interlock relay, CR1.

c) Reference Transformer Assembly, A4

The Reference Transformer Assembly, A4, provides the necessary isolated low voltage for the ±12 volt and ±24 volt power supplies. The AC secondary voltage is also used for pulse generator synchronization. The primary windings of these transformers are jumper connectable for 230 VAC or 460 VAC power line operation as required.

d) Field Power Circuit Module, REC 1

The Field Power Circuit Module, REC 1, is a molded assembly which contains three diodes and an SCR which are connected to form a 2/3 wave rectifier circuit with integral flyback diode. The assembly is directly mounted to the chassis but is electrically isolated internally.

e) Reference and Field Power Fuses, F1-F6

Fuses F1, F2 and F3 provide short circuit protection for the reference transformer assembly. Fuses F4, F5 and F6 protect shunt field supply wiring.

f) Armature SCR Power Bridge

The armature power bridge consists of twelve SCRs and associated gate pulse transformers and snubber networks. The SCRs are connected back-to-back in two three-phase, full-wave bridge circuits -- one for forward direction of operation, the other for reverse. Size A and B controllers utilize heatsink (chassis) mounted "slim-line" modules. Each contains two SCRs which are electrically isolated from the chassis. Size C & D controllers utilize larger "hockey-puk" SCRs which are mounted in pairs in sandwiched heatsink assemblies. Each assembly is easily removable as a unit.

g) Line Inductors, L1 - L6

A ferrite reactor is connected in series with each leg of the SCR power bridge. The reactors limit the rate of change of current (di/dt) through the SCRs and also function with snubber components to limit the rate of change of voltage (dv/dt) across them.

h) Thermal Switch, TS1

An internal thermal switch is provided to shut down the controller in case of overheating due to prolonged excessive output current or loss of fan cooling.

i) Current Transformer Assembly, TB4

AC line current is sensed at power terminal assembly, TB4, by current transformers CT1, CT2 and CT3. These transformers provide an isolated current feedback signal for the main control circuit boards.

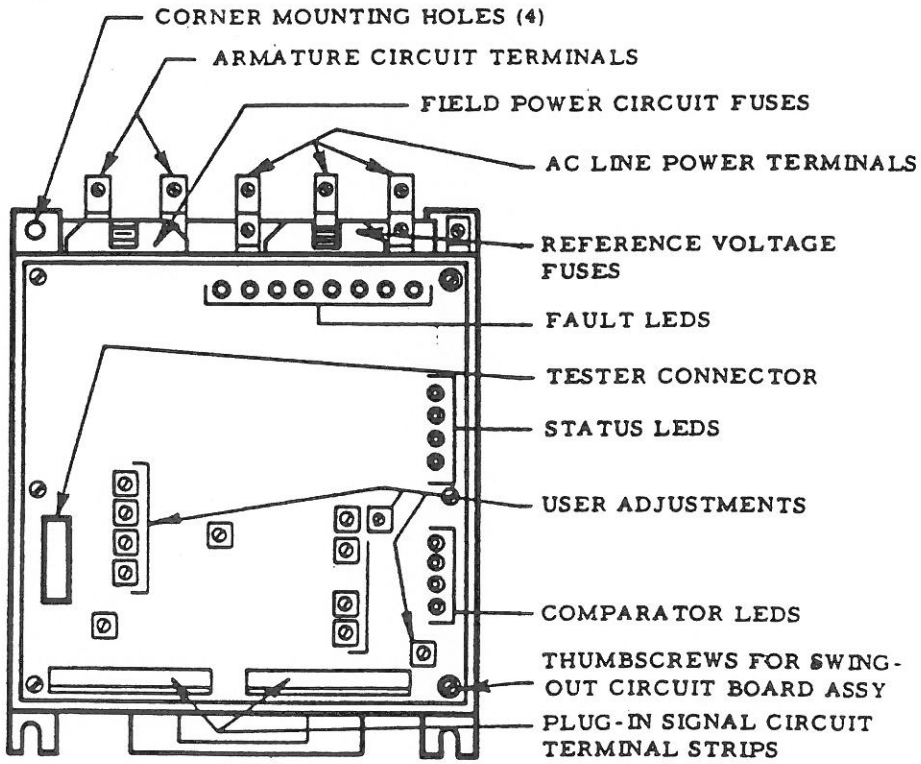

FIGURE 1-1. COMPONENT LAYOUT, SIZE "A" & "B" SPINDLEMATE

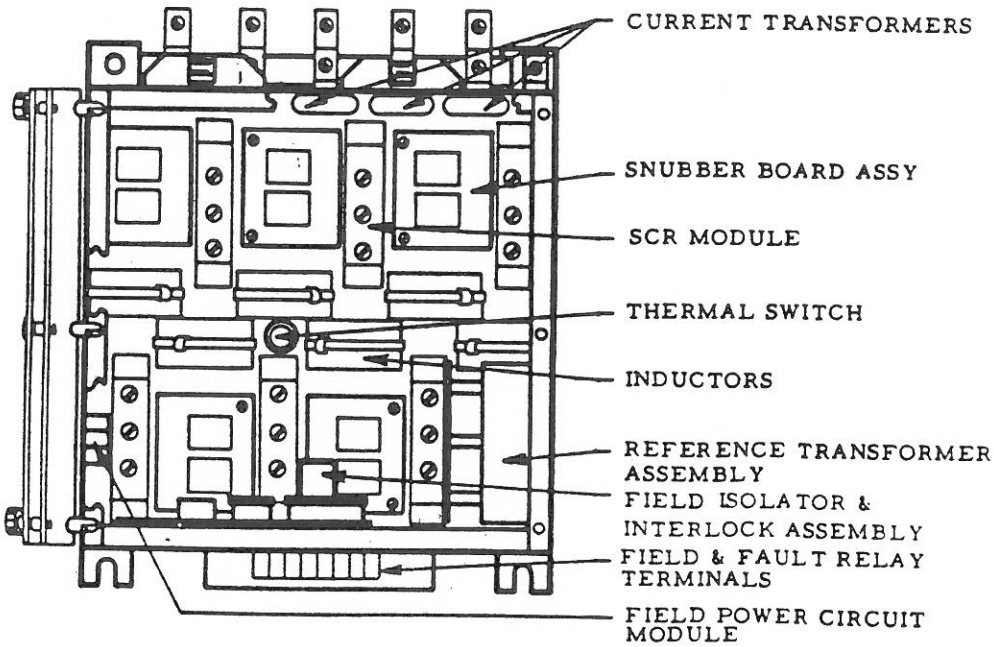

FIGURE 1-2. COMPONENT LAYOUT, SIZE "A" & "B" SPINDLEMATE SWING-OUT CIRCUIT BOARD ASSY OPEN

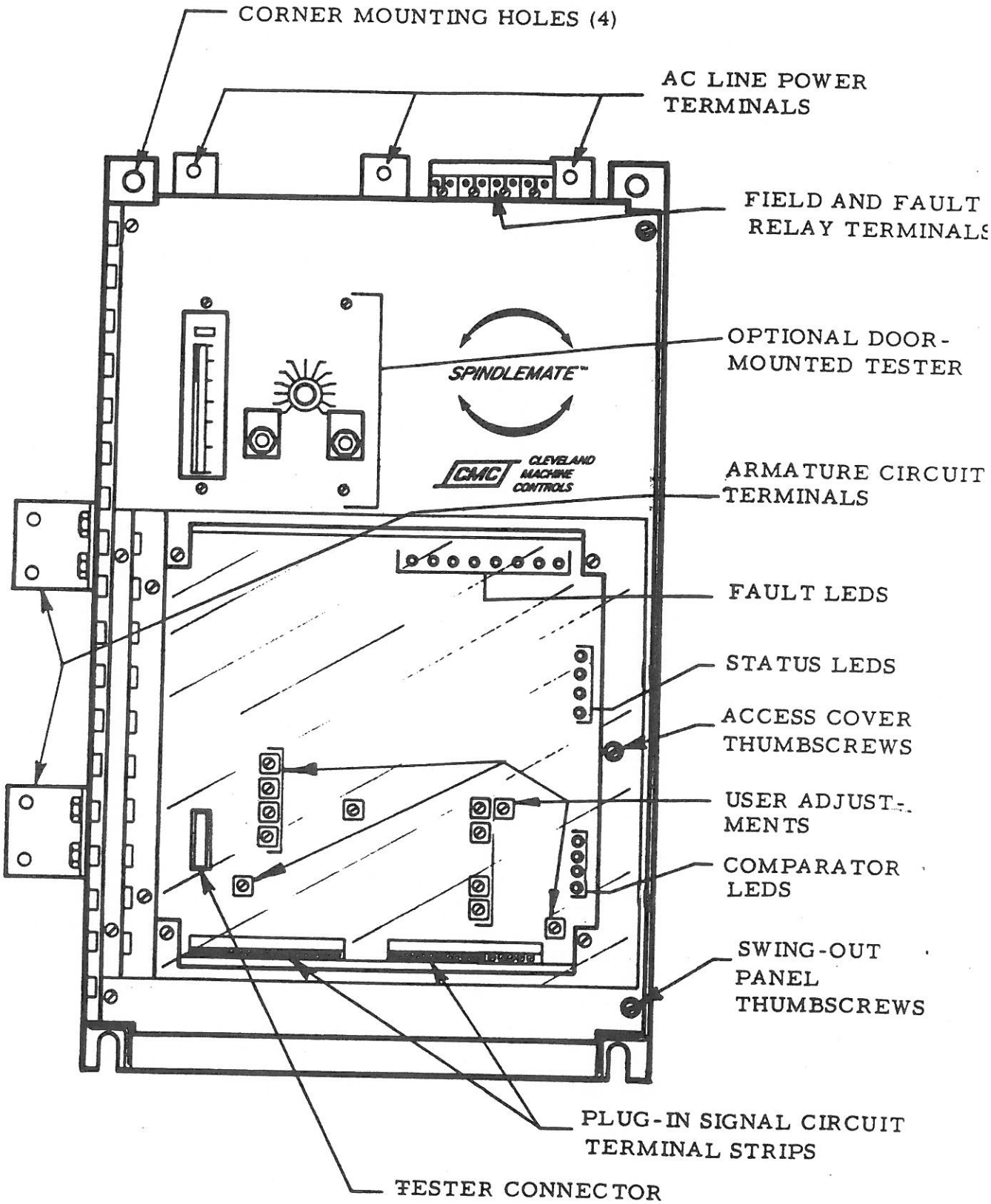

FIGURE 1-3. COMPONENT LAYOUT, SIZE "C" & "D" SPINDLEMATE

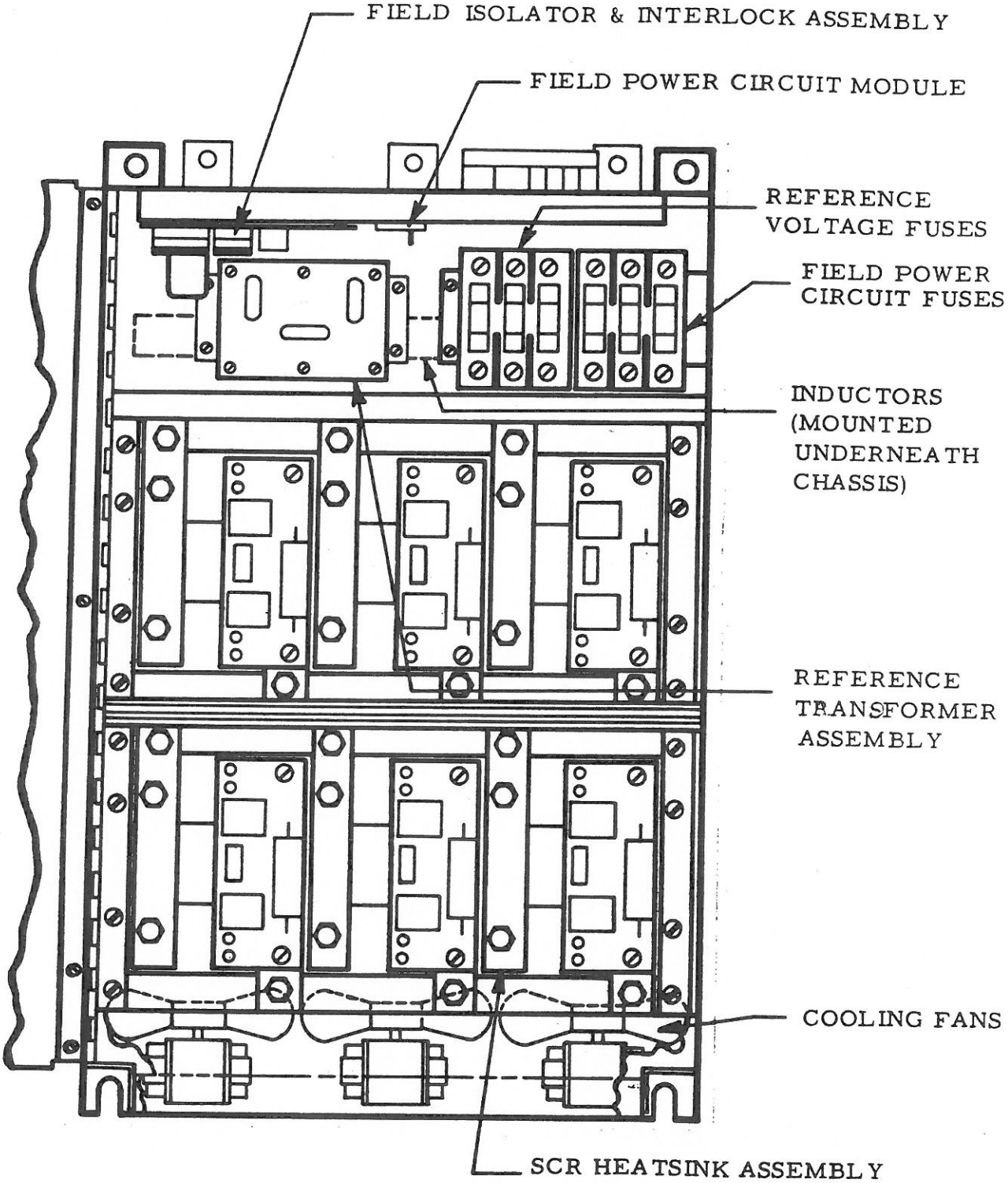

FIGURE 1-4. COMPONENT LAYOUT, SIZE C & D SPINDLEMATE, SWING-OUT PANEL OPEN

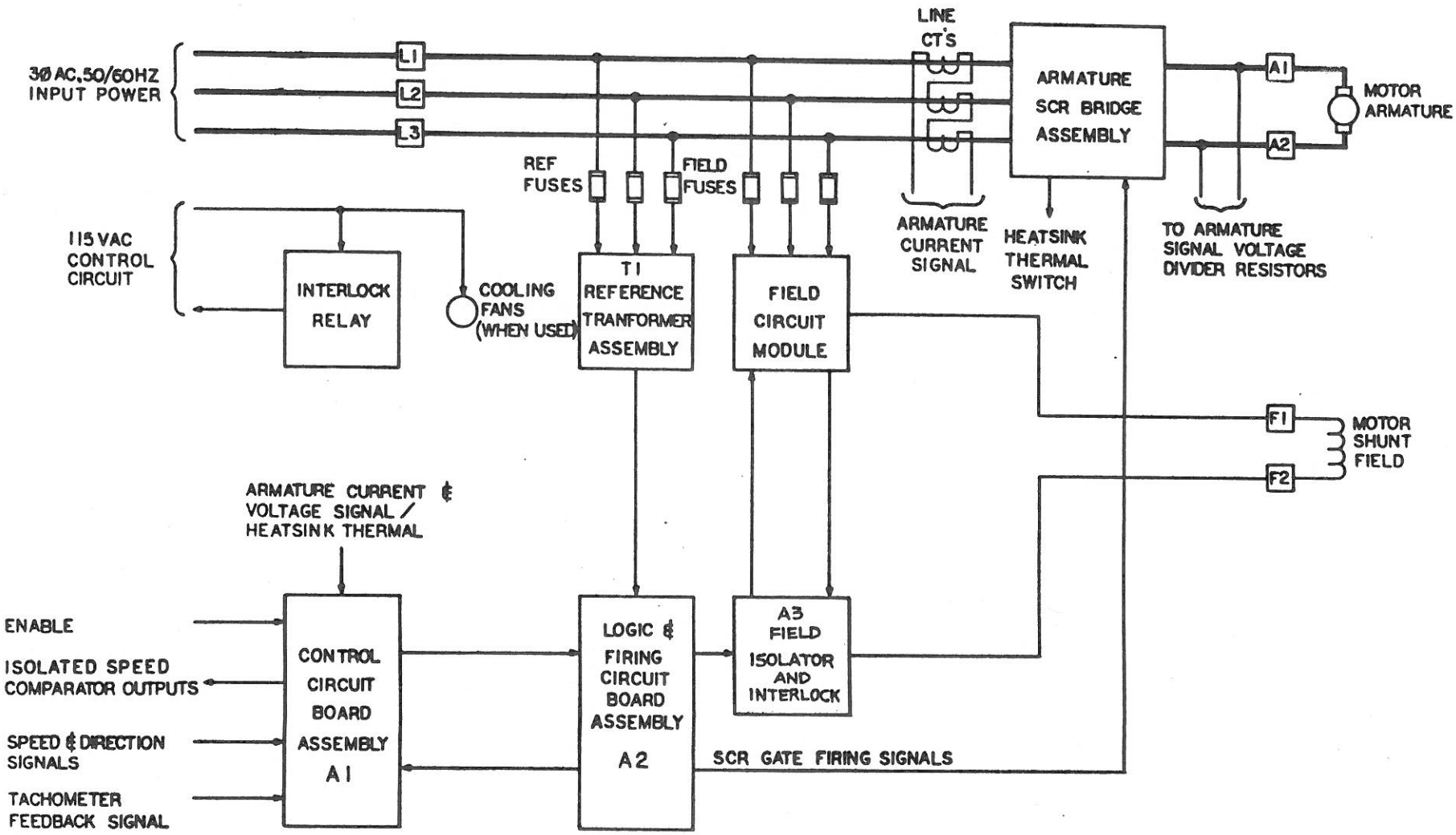

FIGURE 1-5. SPINDLEMATE BLOCK DIAGRAM

1.6 PANEL COMPONENT DESCRIPTION

Refer to drawing section 7.0 for panel layout and circuit connections.

a) AC Circuit Breaker CB1

A three-pole special semiconductor protection type no-fuse circuit breaker is provided to protect the SCR's in case of a fault.

b) DC Circuit Breaker CB2

A three-pole special semiconductor protection type no-fuse circuit breaker is provided to protect the motor in case of a fault. The circuit breaker includes an auxiliary switch connected in the 115 VAC control circuit and an alarm switch which actuates when the circuit breaker trips.

c) DC Circuit Breaker Motor Operator (Part of CB2)

Operation as follows:

1) ON Control

Operating the "ON" switch energizes the motor, which turns ON the breaker. When the breaker is turned ON, the limit switch operates to de-energize the motor.

2) OFF Control

Operating the "OFF/RESET" switch energizes the motor, which turns OFF the breaker. When the breaker is turned off, the limit switch operates to de-energize the motor.

3) ON-OFF Indicator on Motor

When breaker that is ON is tripped, ON-OFF indicator will be showing ON until breaker is reset.

4) RESET Control

Operate the "OFF/RESET" switch to reset the tripped breaker. Circuit operation is the same as in OFF control. Always remove the cause of breaker tripping before resetting it.

Allow five to ten minutes to cool when the breaker was tripped by thermal overload trip, then reset the breaker.

5) Manual Operation

Pump the bottom manual handle right and left to turn ON-OFF the breaker. The indicator on motor operator shows breaker ON and OFF positions.

About 20 cycles of handle pumping completes one breaker ON-OFF cycle.

d) Line Contactor M1

An electrically operated contactor connects the line power to the motor controller.

e) Control Transformer T1

This transformer transforms the line power to 115 VAC. It provides power for the line contactor, the control relay and the motor controller fans.

f) Fuses F1, F2 & F3

These fuses protect the control transformer.

g) Control Relay CR2

The control relay is used to energize the line contactor.

h) RC Surge Suppression Networks R1-C1, R2-C2 & R3-C3

These networks are connected in a delta configuration across the AC power line for the protection of large voltage spikes.

2.0 CONTROLLER INSTALLATION AND WIRING

> **NOTE:** MAKE CERTAIN THE CONTROLLER NAMEPLATE MATCHES THE MOTOR HORSEPOWER, THE MOTOR VOLTAGE AND AVAILABLE AC LINE VOLTAGE.

> THIS EQUIPMENT SHOULD BE INSTALLED, ADJUSTED AND SERVICED BY QUALIFIED PERSONNEL FAMILIAR WITH ELECTRICAL EQUIPMENT AND THE CONTENTS OF THIS MANUAL.
>
> IF THE CONTROLLER HAS BEEN FURNISHED WITHOUT A LINE CIRCUIT BREAKER, THE USER MUST INSTALL A CIRCUIT BREAKER OR FUSED DISCONNECT IN ORDER TO MEET REQUIREMENTS OF THE NATIONAL ELECTRICAL CODE.

2.1 GENERAL REQUIREMENTS AND MOUNTING

The SPINDLEMATE controller is supplied as a panel-mounted subassembly. Refer to drawing section 7.0 for installation, panel wiring and system connections.

Mount the SPINDLEMATE controller in a clean, dry equipment enclosure where free air flow is allowed through heatsinks. Maximum ambient temperature should not exceed 55°C. Do not mount directly above components which radiate heat. Avoid areas where moisture, dirt or dust prevail. Never install the controller where combustible vapors are present. Provide accessibility to board-mounted screwdriver adjustments and make certain the swing-out panel can be fully opened for service to internal components.

2.2 POWER WIRING

Wire in accordance with the requirements of the National Electrical Code (NEC) and any local requirements. Size line and armature wiring per the current shown in the Specification Table, Page 1-3. For motor shunt field and contactor control circuits, use 16 AWG minimum. Run signal wiring (including tachometer) in separate conduits from power wiring.

> IMPORTANT: Always install a controller ground wire the same size as the AC input power wiring.

2.3 SIGNAL WIRING

Small gauge wire (18 to 22 AWG) can be used in the signal and monitor circuits. Command and tachometer wire should be twisted-shielded pairs with the shield terminated at only one end. Take care to run signal and tachometer wires in separate conduits from armature, field and AC power wires to avoid noise pickups which can cause speed regulation errors.

2.3.1 Reset

Reset of all fault detection circuits is automatic when the fault reset button is actuated or when power is applied to the controller (assuming fault is corrected).

2.3.2 Armature Current/Voltage Signal

Motor armature voltage and current signals are available at TB2-16 and TB2-15 respectively. Each is referenced to signal common at TB2-14. The controller is normally shipped with the current signal connected for uni-polar output (i.e., positive output regardless of armature current polarity).

2.3.3 Input Signal Connections

The SPINDLEMATE is configured to operate as follows:

1) Single Ended Input with Controlled Acceleration

Bi-polar command signal ranges from 0 to ±10 volts and is referenced to controller common. Output of the controlled acceleration circuit, TB1-7, is jumpered to the direct speed command input of TB1-8.

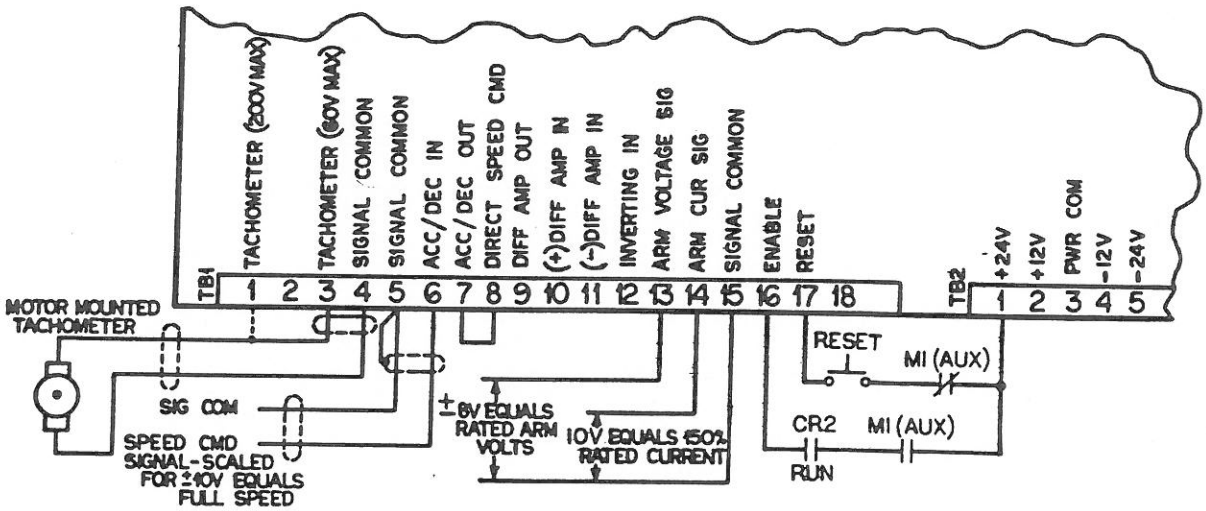

2.4 SPEED COMPARATOR OUTPUTS

Standard speed comparator output signals on the SPINDLEMATE are Low Speed, Set Speed and Signal Present (AUX). They are commonly interfaced with the CNC for interlock functions such as zero speed, gear shift speed, axis feed permission (up to speed, down to speed), etc. They can also be used to signal operator station status lamps. Outputs are optically coupled transistors which give total isolation from controller signal common. Each has a rating of 30 volts, 30 ma and each has a separate on-board LED status indicator. The outputs can be used directly or as relay drivers in a 115 VAC control circuit.

Comparator output status is as follows:

FUNCTION	TRANSISTOR SWITCH STATUS
Low Speed	
Below Trip Point	OFF
Above Trip Point	ON
Set Speed	
Below/Above Trip Point	OFF
Within Set Speed Range	ON
Aux (Signal Present)	
Below Trip Point	OFF
Above Trip Point	ON

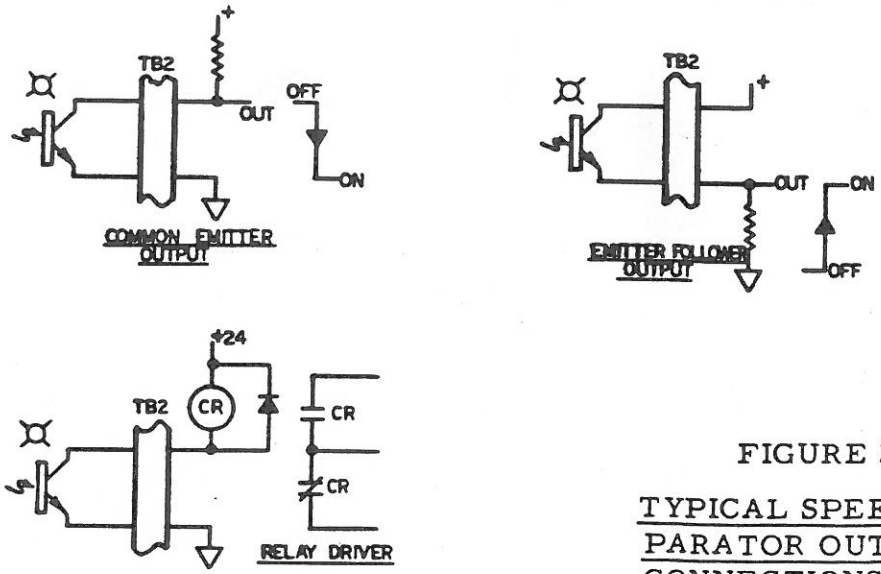

FIGURE 2-10

TYPICAL SPEED COMPARATOR OUTPUT CONNECTIONS

3.0 START AND ADJUSTMENT

SAFETY NOTICE: This equipment should be installed, adjusted and serviced by qualified personnel familiar with electrical equipment and the contents of this manual. High voltage (240 or 480 VAC) is present when the power is on. Use appropriate high voltage troubleshooting techniques.

Accidental short circuits can result in high currents, equipment damage and personnel injury. Check for short circuits and loose connections before applying power. Use ground isolated instruments for all measurements.

FOLLOW THESE SAFETY PRECAUTIONS!

- Check all power and signal wiring. Check heatsinks and circuit boards for loose wire strands or debris which may have accidentally fallen into the controller during installation.
- Verify that motor and drive mechanism is clear of obstruction. Remove any loose parts or shaft keys which could fly off and cause injury.
- Be prepared to immediately stop the drive and turn off power. When starting a system for the first time, the motor may accelerate to a high speed or run in the wrong direction due to improper or missing connections.
- Make certain controller chassis is properly grounded.

TEST EQUIPMENT

1) Digital Multimeter (DMM) or Volt-Ohmmeter (VOM) such as Simpson Model 260.

2) CMC's SPINDLEMATE Tester
The tester is supplied as an option with the controller -- either as a hand-held version or built into the unit (Size B, C & D) Though not required for startup, the tester provides a convenient means of checking system operation. It is calibrated in percent so that it can be utilized to check

controllers of various horsepower and at different locations. It s use will be referenced throughout this section, along with actual voltage and current measurements.

3.1 PRELIMINARY CHECKS, POWER OFF

1) If the optional SPINDLEMATE tester is available, plug it into connector J7 on Control Circuit Board Assembly A1.

2) Turn to TORQUE adjustment CCW until it is about 1/4 turn from its fully CCW position.

NOTE: 50 HZ POWER LINE OPERATION

Controllers are factory-tested on 60 Hz line power. If input power to the controller is 50 Hz, the jumper wire soldered across the two terminals labelled "50 Hz" on Logic and Firing Circuit Board Assembly, A2, must be removed.*

3.2 PRELIMINARY CHECKS, POWER ON

1) Close the AC line power disconnect to apply power to the SPINDLEMATE controller. (Do not yet close the motor contactor.)

Carefully measure the three-phase voltage applied to the controller:

240V Systems - 230 VAC ±10% Line-Line
500V Systems - 460 VAC ±10% Line-Line

2) Check for the following LED indicators:

AC POWER
± 12 V
READY

If any of these indicators do not come on, recheck wiring and fuses.

---

* With this jumper, the motor armature bias current at zero speed will be excessive when operated at 50 Hz.

3) Sizes B, C & D Controllers - check cooling fan operation

SPINDLEMATE Tester Checks

SWITCH POSITION	NOMINAL METER READINGS
Line Voltage, L1-L2	100%
Line Voltage, L2-L3	100%
Line Voltage, L1-L3	100%
Field Current	20 to 40% (Economized)
Armature Voltage	
Armature Current	0
Speed Command	
Tach Voltage	
+12V	100%
-12V	100%
Current Command	10 to 20%
Torque Limit	10 to 20%

3.3 MOTOR OPERATING CHECKS

> CAUTION: If any problem is encountered during startup, DO NOT JUMPER OUT ANY SAFETY INTERLOCK CIRCUITRY. Refer to troubleshooting guide lines in Section 5 of this manual.

1) With a zero speed command signal, energize the motor contactor, M1, with the Spindle Start control circuit. The motor should remain at near zero speed. Check the Spindle Stop control circuit to be certain its motor contactor drops out.

   IF THE MOTOR STARTS TO ACCELERATE TO A HIGH SPEED, the tachometer feedback polarity is reversed. Interchange the tachometer wires.

2) Restart the drive and apply a small forward speed command signal. The motor should accelerate and stabilize at the commanded speed. If motor rotation is reversed from that required for the speed command polarity, reverse both the motor shunt field and the tachometer wires.

3) When the speed command signal is removed, the motor should regenerate to zero speed. If the motor runs at a very low speed without a speed command signal present, adjust the OFFSET trimmer potentiometer, R156 on Control Circuit Board A1, for zero speed.

4) Check reverse operation by applying a small reverse speed command signal. When proper speed control is established, turn the TORQUE adjustment to mid-position.

SPINDLEMATE Tester Checks	
SWITCH POSITION	NOMINAL METER READING
Field Current	100% (Full Field)

3.4 CONTROLLER ADJUSTMENT

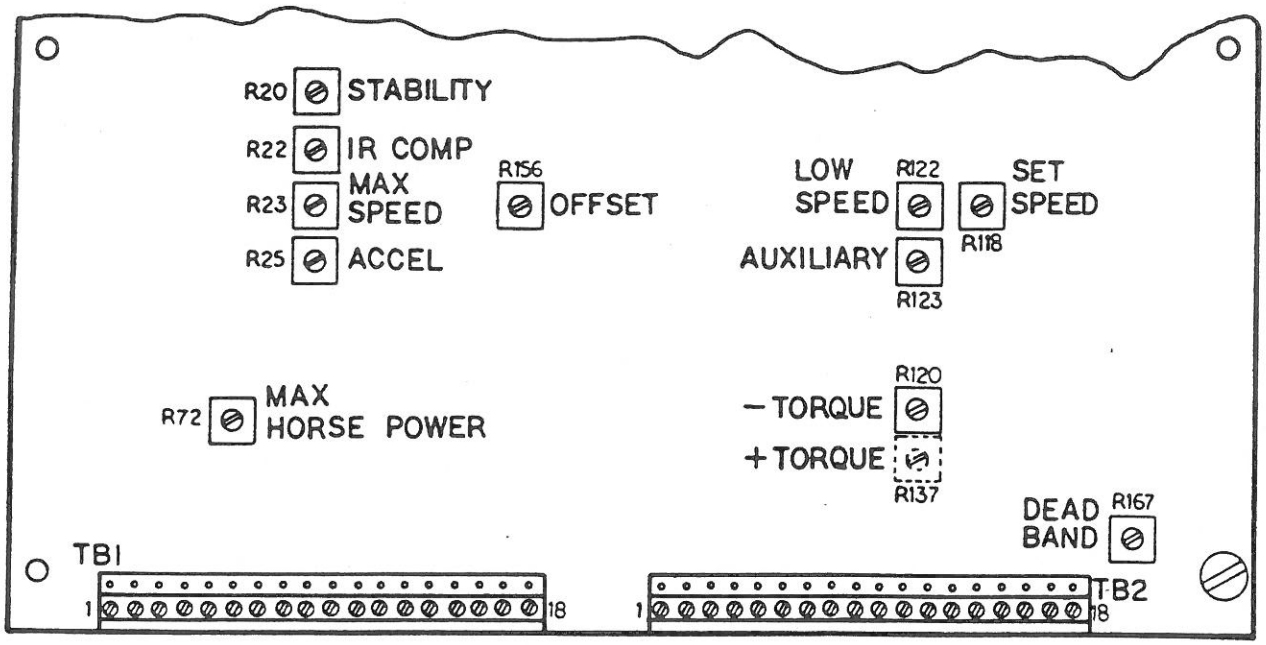

A1 CONTROL CIRCUIT BOARD ASSEMBLY

NOTE: User adjustments are clearly labelled and easily identified on the main circuit board assemblies. The small DP trimmer adjustments are factory set and should not be altered. The procedure for setting these trimmers is listed for reference in the back of the manual.

1) TORQUE

The TORQUE control is used to set the amount of torque the motor can provide up to base operating speed by determining its level of armature current. Full CCW rotation will reduce the current to zero while with full CW rotation, the controller can provide 200% rated current. Most applications require a setting of about 150% in order to meet low speed load and acceleration requirements. The adjustment is most easily made using the SPINDLEMATE tester but alternate methods are listed below. Be certain to keep motor speed low (below base speed) until the other controls are properly adjusted. Apply step command signals (abruptly apply and remove the signal) with the ACCEL control fully CW to check the setting.

NOTE: It is not recommended that the motor shaft be locked for this test. If it is, be aware that the output current will reduce to 10% of nominal as set by the TORQUE control after 1 second of operation by the Stall Current Limit detector circuit.

a) SPINDLEMATE Tester Checks - A special feature of the tester is the ability to set maximum output current without the motor operating. Simply switch the tester to the TORQUE LIMIT position and depress the pushbutton. This displays the TORQUE adjustment setting and simultaneously opens the interlock circuit to prevent motor operation. Output current can be then checked on the ARMATURE CURRENT position.

b) Current Test Output Signal - A signal proportional to the absolute value of armature current is available at TB1-14. It is referenced to signal common and has a scale factor of +10 volts equals 15% rated current.

c) Armature Circuit Shunt - A shunt can be placed in series with one of the armature leads and the current can be measured with a ground-isolated DMM. If done this way, connect test leads directly to sense screws on shunt - not power terminals which can give a faulty indication due to voltage drop of terminal connections.

CAUTION: HI VOLTS

2) STABILITY

The STABILITY control provides response time adjustment of the controller within limitations imposed by system mechanican characteristics and the torque limit. Turning the adjustment CW will increase system response and correct overshoot or low frequency oscillation. Too high a setting may, however, cause high frequency oscillation. For most applications, a 50% setting is a good compromise. The adjustment is most easily made by applying step command input signals.

3) Field Control CROSSOVER Check

NOTE: If the SPINDLEMATE is connected for BEMF feedback (no tachometer) turn the CROSSOVER control fully CW.

Monitor the armature voltage with the SPINDLEMATE tester or a DMM and apply a low level (non-reversing) speed command signal. Slowly increase the signal to a level where the motor shaft is rotating at, or slightly above, base speed. At this point, the motor armature voltage should have stopped increasing with shaft speed and the field regulator should have taken over. Verify this by noting that the armature voltage is:

215 to 230 VDC, 240 volt motors
450 to 480 VDC, 500 volt motors

If the armature voltage continues to rise above the levels indicated, the CROSSOVER adjustment in the field regulator is incorrectly set. This will cause overvoltage trip-out. Proceed to Field Regulator Adjustments, Para. 3.6, before going to the MAX SPEED adjustment.

SPINDLEMATE Tester Checks	
SWITCH POSITION	NOMINAL METER READING
Armature Voltage	85% to 95%
Field Current	Starting to decrease from the 100% position

4) MAX SPEED

With the CROSSOVER adjustment correctly set, continue to increase the speed command signal to its maximum value while monitoring motor shaft speed. Do this by measuring tachometer voltage or by checking with a hand-held tachometer or equivalent. Adjust the MAX SPEED control for the desired motor speed.

CAUTION: DO NOT OVER SPEED MOTOR

If the motor armature voltage starts to increase at high speeds, the MIN FIELD adjustment in the field regulator is incorrectly set. See Para. 3.6.

SPINDLEMATE Tester Checks	
SWITCH POSITION	NOMINAL METER READING
Armature Voltage	90 to 100%
Field Current	Minimum
Speed Command	100%
Tachometer Voltage	100%

5) ACCELERATION

Motor acceleration time from zero to full speed and deceleration from full speed to stop is set with the ACCEL adjustment. Standard range is 0.5 to 5 seconds to an unloaded motor. With a large inertial load, however, torque capability will limit short accel/decel times.

6) IR COMP

NOTE: The IR COMPENSATION adjustment is used only with systems which do not have tachometer feedback. If your system has tachometer feedback, TURN THE ADJUSTMENT FULLY CCW.

If improved low speed regulation is desired on systems with BEMF feedback, turn the IR COMP adjustment CW until the desired regulation is achieved. Recheck at other speeds to be certain motor operation is stable. Most applications will allow a setting of about 50%.

7) DEAD BAND (NOT USED)

The Dead Band adjustment (R167) is normally turned full CCW. Its effect is to cause a "Dead Band" of response to a speed command signal. This means the drive will be motionless until the command signal reaches a particular level. Most applications will not require any dead band. To increase the amount of circuit "Dead Band", turn pot CW.

3.5 SPEED COMPARATOR ADJUSTMENTS

NOTE: The speed comparator circuits are incorporated into the controller to provide an indication of overall system operation. Precise setting of these adjustments is not required for proper controller operation.

1) SET SPEED

The Set Speed circuit detects commanded speed when accelerating from zero or a low speed to a higher speed, and from a high speed to a lower speed. It operates the same in both forward and reverse direction of motor rotation.

Full CW rotation of the SET SPEED adjustment sets the trip point closer to set speed while with full CCW rotation, the trip point will be within approximately 25% of set.

FIGURE 3-1

OPERATION OF SET SPEED ADJUSTMENT

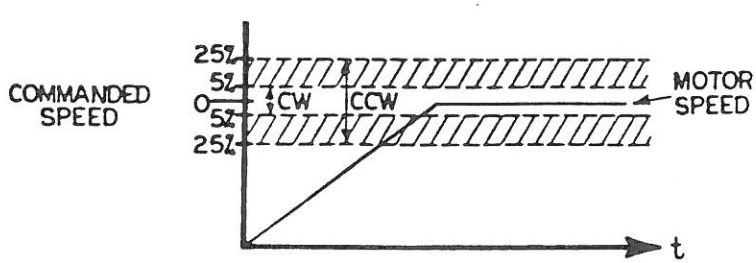

2) LOW SPEED

The LOW SPEED adjustment is approximately ±2 to ±25% of max. motor speed. CW rotation increases the sensitivity.

3) AUX

The AUX comparator circuit is normally wired to detect the presence of a speed command signal. (This comparator is sometimes wired for special speed sensing circuits.) CW rotation of the AUX adjustment increases the sensitivity.

3.6 FIELD REGULATOR ADJUSTMENTS

NOTE: The Field Regulator is factory-set and further adjustment should not be required unless motor parameters were not known at time of shipment.

Use this procedure for standard 240 volt and 500 volt motors which have 150 volt and 300 volt fields. Motors with non-standard field voltages require a special set-up procedure. Consult CMC Applications Engineering.

Adjustments are located on the Logic and Firing Main Circuit Board, A2. Open the swing-out board assembly fully for access.

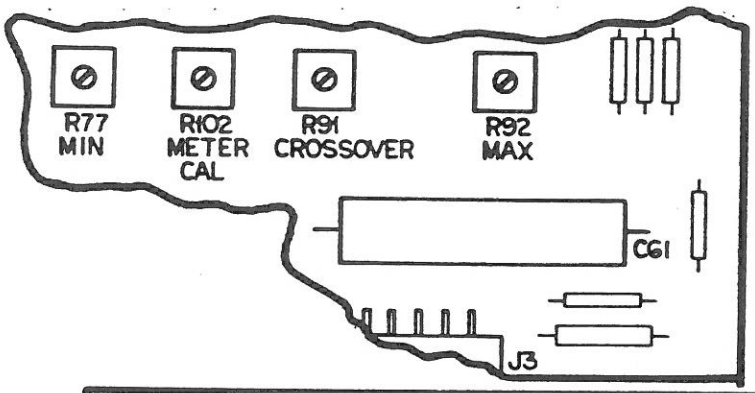

FIGURE 3-2

FIELD REGULATOR ADJUSTMENTS ON MAIN BOARD ASSEMBLY, A2

CAUTION: DO NOT ATTEMPT TO OPERATE MOTOR IN THE FIELD WEAKENING RANGE WITHOUT TACHOMETER FEEDBACK. LOSS OF CONTROL AND EXCESSIVE SPEED WILL RESULT.

1) Initial Adjustment

MAXIMUM FIELD (MAX)	-	Fully CW
MINIMUM FIELD (MIN)	-	Mid Position
CROSSOVER	-	Fully CW

2) Warm-Up Period

Operate the motor at low speed (less than 1/2 base speed) for 1/2 hour to allow the shunt field to come up to operating temperature.

3) MAXIMUM FIELD

After the warm-up period, make MAXIMUM FIELD adjustment with motor contactor closed but with a zero speed command signal.

a) SPINDLEMATE Tester

Switch the tester to the FIELD CURRENT position. Adjust the MAX FIELD control CCW until the meter reading starts to decrease. This indicates that the regulator is out of saturation and in active control. Leave the adjustment set at about 5% (1 LED) below its saturated level.

b) VOM or DMM

If SPINDLEMATE Tester is not available, make the adjustment by monitoring field voltage or field current with a separate voltmeter. If voltage is checked to make the adjustment, follow instructions in (a) above. Field current can be checked by measuring the voltage across the shunt field current sensing resistor R9 on Field Isolator and Interlock Circuit Board, A3. Adjust the MAX FIELD control for the field current shown on the motor nameplate.

> CAUTION: HIGH VOLTS. The shunt field power circuit is at line potential.

4) METER CALIBRATION

The METER CAL adjustment is used only to calibrate the SPINDLEMATE Tester. Adjust the control after the MAX FIELD adjustment is made for a reading of 100% on the FIELD CURRENT position.

5) MINIMUM FIELD

Estimate the minimum shunt field current necessary for maximum motor speed. Refer to Figure 3-3. Open the AC line contactor and wait for about 10 seconds for the AC field to go to the economized level (controlled with the MINIMUM FIELD adjustment). Adjust the MIN FIELD control to the estimated level:

Example: 1150 RPM Base Speed Motor
3450 RPM Maximum
Adjust MIN FIELD control for
30% current

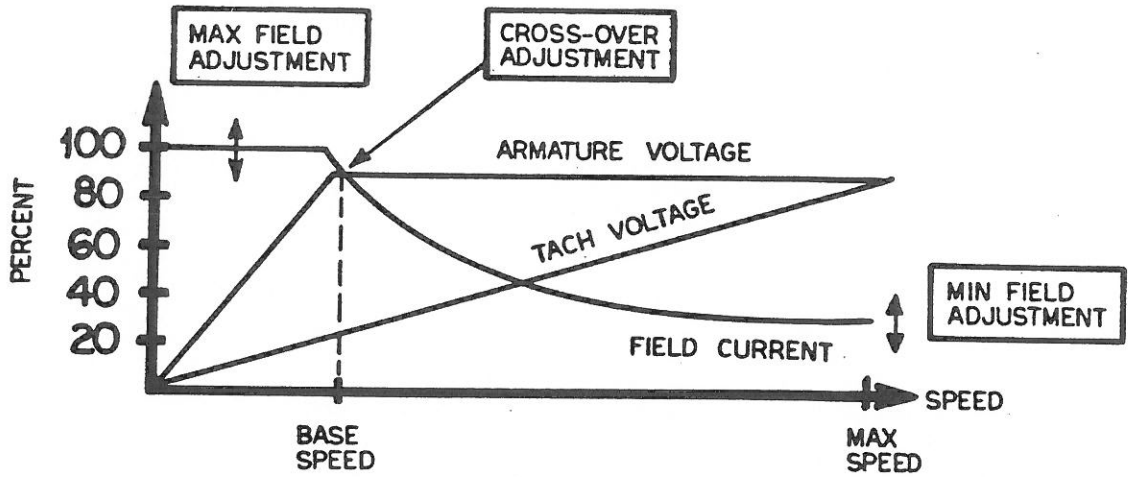

FIGURE 3-3. FIELD REGULATOR CHARACTERISTICS

6) CROSSOVER

Monitor the armature voltage with the SPINDLEMATE Tester on a DMM and apply a low level (non reversing) speed command signal. Close the AC line contactor and slowly increase the speed signal to base operating speed as indicated by 240 volts or 500 volts (as applicable) at the armature. Turn the CROSSOVER adjustment CCW until the armature voltage reduces to 90%.

220 VDC	-	240 volt Motors
460 VDC	-	500 volt Motors

Monitor motor speed by measuring the tachometer voltage or by checking with a hand-held tachometer and continue to increase the speed command signal to full motor speed. Note that the armature voltage remains constant as the speed increases. If the armature voltage starts to increase at high speeds, turn the MIN FIELD control CCW a little. Field regular adjustment is now complete. Check operation in the reverse direction of motor rotation if applicable.

3.7 SPINDLEMATE TESTER

The built-in circuit tester is a valuable aid when first starting up a controller, or as a check on a system already in operation. It is calibrated in percent so that the same tester can be utilized to check controllers of various horsepowers. Indication is on LED bar graph scale. The following chart lists tester functions :

SWITCH POSITION	CIRCUIT MEASURED	NOMINAL METER READING
1 LED TEST	Individually checks all LEDs of Tester	
2 - 4 LINE VOLTS L1 to L2 L2 to L3 L1 to L3	Reference Transformer Secondary Voltage	100%
5 FIELD CURRENT	Motor Shunt Field Supply Current: Economized Drive On Below Base Speed Drive On Above Base Speed	 Min. Field Setting 100% Reduces to Min.Field Setting at Max Speed
6 ARM VOLTS	Output of Armature Voltage Buffer Amplifier	0 to 100%, Proportional to Motor Speed
7 ARM CUR	Output of Armature Current Buffer Amplifier	0 to 150%, Proportional to Motor Torque
8 SPEED CMD	Speed Command Signal	0 to 100%, Proportional to Motor Speed
9 TACH VOLTS	Tachometer Feedback Signal	0 to 100%, Proportional to Motor Speed
10 +12 VDC	+12 Volt Ref Supply	100%
11 -12 VDC	-12 Volt Ref Supply	100%
12 CUR CMD	Input Command Signal to Current Loop Amplifier	0 to 150%, Proportional to Motor Torque
13 TORQUE LIMIT	Current Limit (TORQUE) Setting, Drive Disabled	0 to 150%, Proportional to TORQUE Control Setting

NOTE: Voltage measurements are positive (+) unless NEG LED is on.

4.0 THEORY OF OPERATION

CMC's SPINDLEMATE™ controllers utilize a three-phase, full-wave (six pulse) regenerative SCR (silicon controlled rectifier) power circuit to control 240 VDC and 500 VDC motors of 3 HP and up. The standard control consists of the motor armature controller and the shunt field regulator.

The SPINDLEMATE incorporates a full time current loop to enable the drive to rapidly and accurately follow torque commands and tachometer feedback for precision control. Adjustable controlled acceleration/deceleration is standard. This provision allows setting acceleration and deceleration in the range from 0.5 to 5 seconds for zero to full speed with other adjustment ranges available as options. Acceleration is limited by the automatic current limit circuitry if the acceleration setting demands armature current exceeding the adjustable current (torque) limit setting. Figure 4-1 shows the current and rate feedback arrangements in a simplified block diagram.

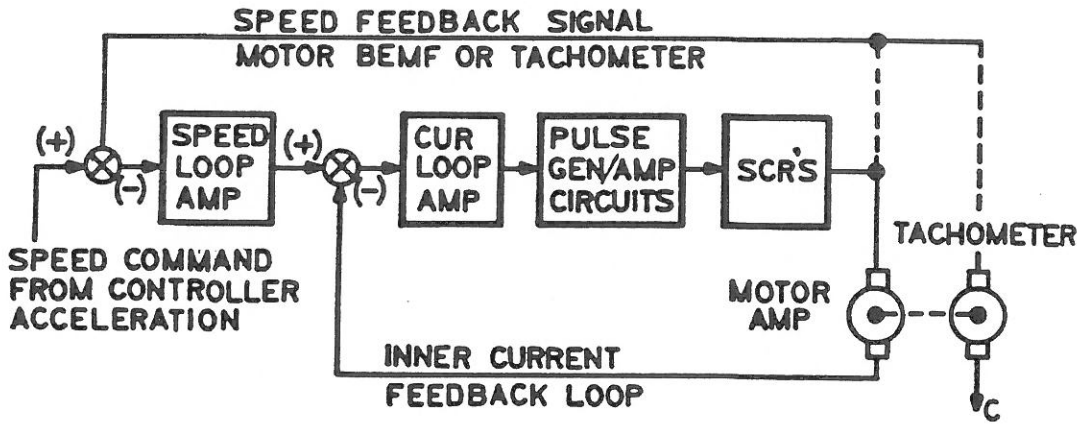

FIGURE 4-1. CONTROLLER CURRENT AND SPEED FEEDBACK ARRANGEMENT

The input to the SPINDLEMATE controller is isolated from the AC lines and ground and may be used with grounded or non-isolated signal sources. More than one drive may be operated from a common speed potentiometer or other signal source.

4.1 ARMATURE CONTROLLER POWER CIRCUIT

The power circuit, shown in Figure 4-2, is a full-wave, bi-directional bridge with twelve controlled SCRs for three-phase full-wave rectification of the incoming AC input power in both directions. This full-wave SCR bridge assembly consists of six sets of SCR assemblies which control current flow in the load. Each SCR is directly mounted to a finned aluminum heatsink assembly which dissipates the heat generated by current flow through the SCR. Phase control of the SCRs in the bridge assembly controls the magnitude of the DC power to the load.

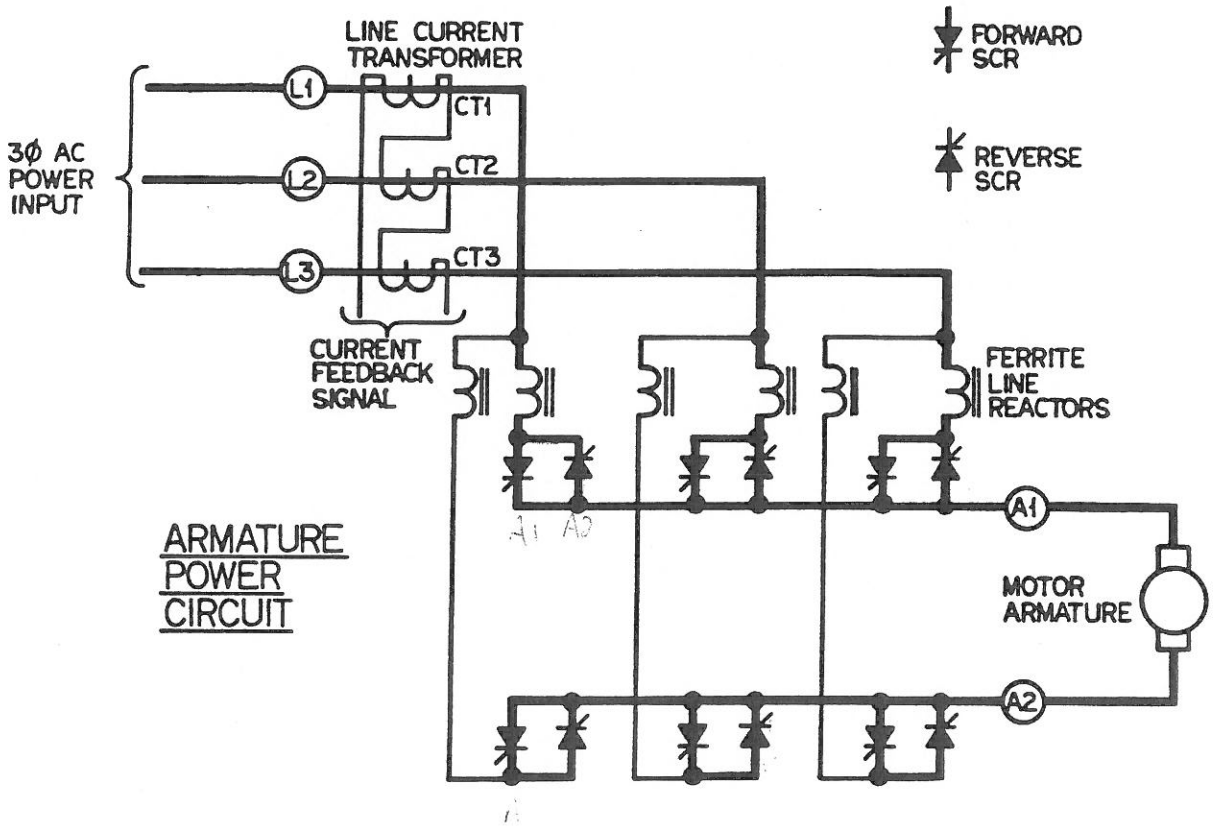

FIGURE 4-2. ARMATURE POWER CIRCUIT

4.1.1 SCR Phase Control

All phase controlled SCR power converters operate by connecting each phase of the AC line sequentially to the motor armature by controlling the firing of the SCRs. An SCR operates in a manner very similar to that of a diode.

A diode, which is denoted by the symbol (A) (K), is a solid state rectifier which allows current flow in the direction of the arrow symbol whenever the anode end of the diode is more positive in voltage than the cathode end, but prevents current flow when the voltage is reversed.

An SCR, denoted by the symbol (A) 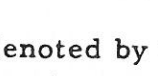 (G) (K), is different in that it prevents current flow in both directions unless "fired", when the voltage on the anode is positive relative to the cathode; it then "turns on" and allows current flow exactly as if it were a diode. Firing is accomplished by applying a positive voltage to the gate relative to the cathode of the SCR. Once turned ON, the SCR will remain ON until the current through the SCR has been reduced to zero and the voltage is zero or reversed (i.e., anode negative to cathode). It then shuts off and prevents current flow until fired again. The voltage drop across a diode or an SCR in the "ON" condition is about one volt, thus the power losses are very low. The SCR firing sequences are as follows (see Figure 4-2):

SCR's	Line to Line Phases	
A1 and B4	L1-L2	Forward
A1 and C4	L1-L3	
B1 and C4	L2-L3	
B1 and A4	L2-L1	
C1 and A4	L3-L1	
C1 and B4	L3-L2	
Repeats		
A3 and B2	L1-L2	Reverse
A3 and C2	L1-L3	
B3 and C2	L2-L3	
B3 and A2	L2-L1	
C3 and A2	L3-L1	
C3 and B2	L3-L2	
Repeats		

4.1.2 Power Circuit Waveforms

Typical controller output voltage and current waveforms are shown in Figures 4-3 and 4-4. The waveforms of Figures 4-3 and 4-4 apply for the forward SCR set only; the voltages and currents in the reverse SCR set have the same shape with opposite polarity.

When each SCR pair is fired (turned ON by the control circuitry, to be discussed later), the voltage across the load is switched to that of the AC input supplying the SCRs which are fired. For example, on the extreme left of Figures 4-3 and 4-4, the output voltage becomes that between L1 and L2 when SCRs A1 and B4 are fired.

This applies a positive voltage across the load and the output current rises until the L1 to L2 voltage crosses the output average voltage. The current then decreases until zero current is reached, at which point the SCR shuts off and the load voltage rises to the average value.

The load voltage remains at this value until SCRs A1 and C4 (L1 to L3) are fired and the sequence is repeated. At the low output currents illustrated at the left of Figures 4-3 and 4-4, each SCR pair shuts off at zero current before the next pair is fired; at high currents as shown at the right side of the figures, each succeeding SCR is turned on before the current in the SCR which has been ON falls to zero. This type of high current operation is referred to as "continuous conduction" since the load current is never shut off between cycles but is commutated from one incoming AC line to the next.

Note that the full range of control is attained by varying the firing pulses over a range of about 120 electrical degrees referred to one line cycle.

4.1.3 Transient Suppression

Associated with each SCR Assembly are snubber networks and transient suppressors across the SCRs.

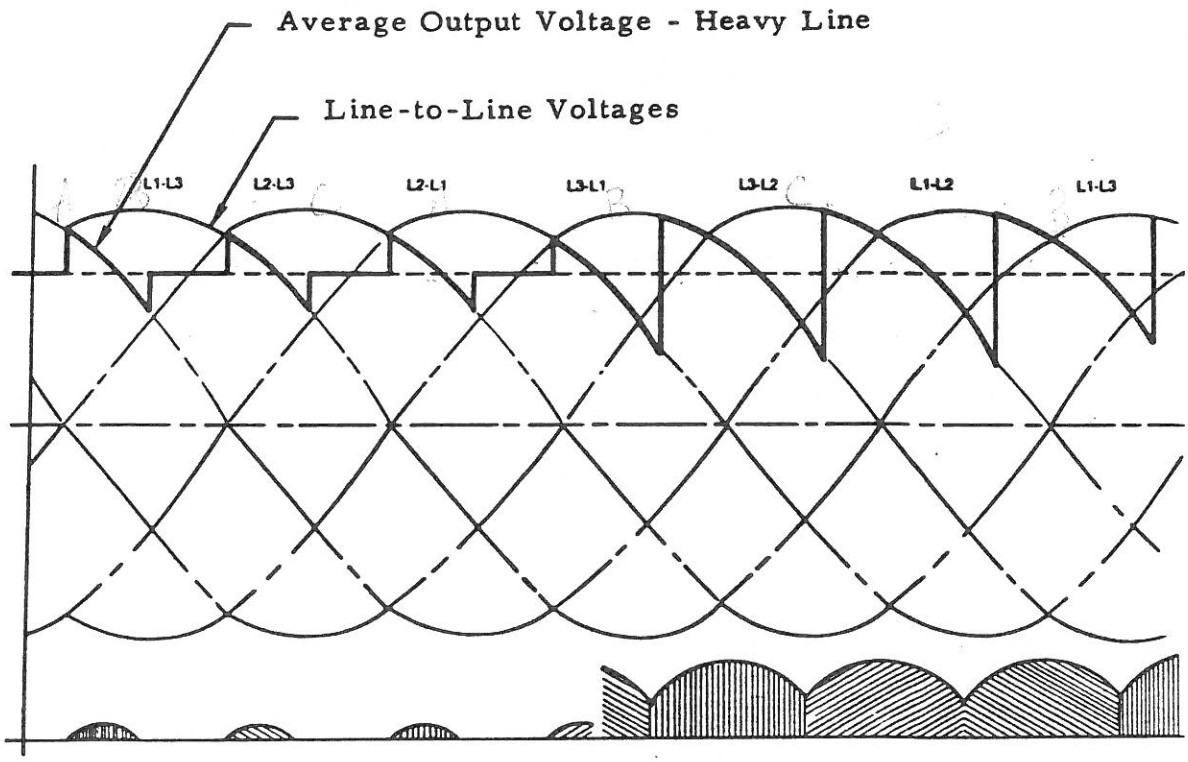

FIGURE 4-3. THREE-PHASE FULL-WAVE BRIDGE WAVEFORMS - HIGH OUTPUT VOLTS

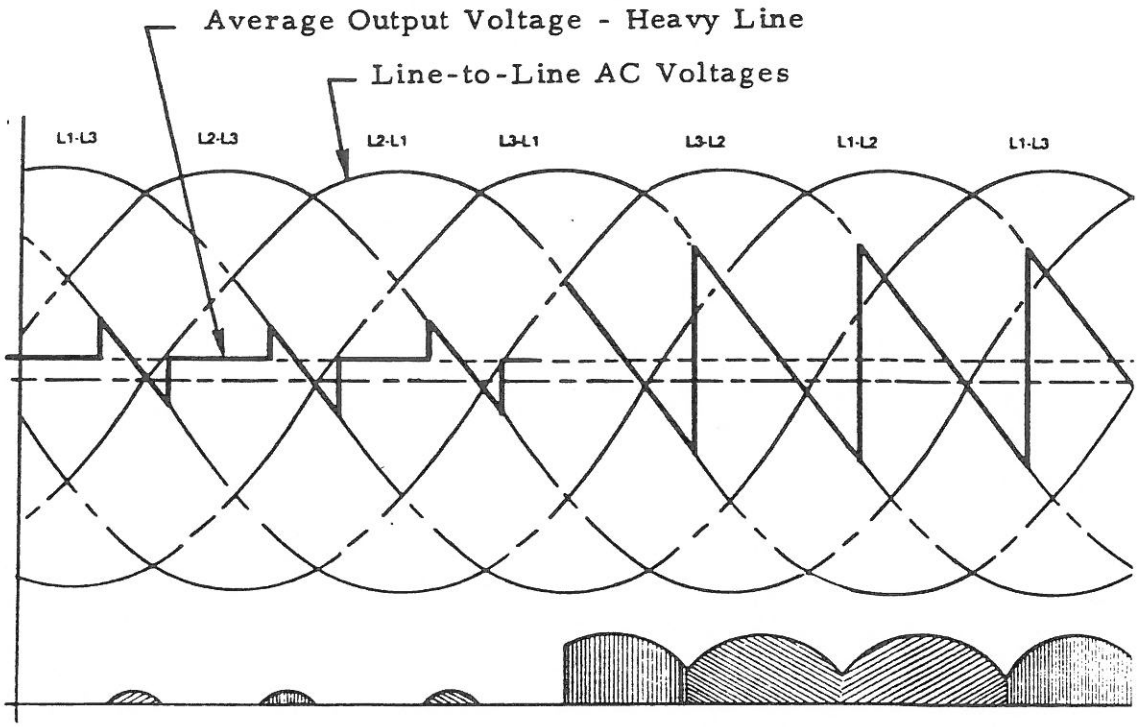

FIGURE 4-4. THREE-PHASE FULL-WAVE - WAVE BRIDGE WAVEFORMS - LOW OUTPUT VOLTS

The snubber networks consist of a series RC network connected across from anode to cathode. There are six of these networks (one for each SCR pair). This network acts to limit the rate of change of voltage (dv/dt) across the SCR to a value within the device rating.

Ferrite reactors in series with each SCR pair limit the rate of change of current (di/dt) through the SCR and also work with snubber network components to limit dv/dt.

Peak transient voltage suppression is attained with metal oxide varistors (MOV's) matched to the SCR voltage rating. These suppressors are installed across the SCRs in parallel with the snubbers. They serve to clamp voltage spikes to a level well within the peak voltage rating of the SCRs.

4.1.4 Current Feedback

Current transducers mounted on TB4 are used to sense current in the three incoming main power lines. These transducers are toroidal transformers whose output signal is proportional to the current in each phase of the AC line. The AC line power bus bars passing through the center of the coil form the transformer primary. The secondary coil voltage is rectified with diode bridges and loaded with resistors. The outputs of the three transducers are summed together and the resulting DC signal is proportional to controller output current. This signal is used directly on the circuit board assembly for current feedback since it is electrically isolated from the high voltage SCR section.

4.2 MAIN CIRCUIT BOARD ASSEMBLIES

The two main circuit board assemblies, A1 and A2, contain most of the electronic components and circuitry necessary to operate the controller. The boards are mounted back-to-back and interconnect at connector J7.

Major functions of the Control Board, A1, are:

1) Speed and current regulator circuits
2) Interlock, Status and Fault LED circuitry
3) Comparator circuits with opto-isolated outputs

Major functions of the Logic and Firing Board, A2, are:

1) ±12 volts and ±24 volts power supplies
2) Line synchronization, SCR firing pulse generation, distribution and amplifier circuits, output current polarity steering logic.
3) Field current regulator and adjustments

4.2.1 Speed Regulator Circuits

The speed regulator circuitry is made up of several individual circuits which condition the speed command and feedback signals to properly control motor speed. These circuits are:

1) The controlled acceleration/deceleration circuit
2) The armature voltage amplifier
3) The speed loop amplifier

4.2.1.1 The Controlled Acceleration Circuit

This circuit includes operational amplifiers U8A and U8B and associated components. The circuit determines the rate of change of speed command signal which is applied to the speed error amplifier by changing sudden or step command input signals into linear ramp functions. See Figure 4-5.

The input to this circuit is fed from TB1-6 through resistor R28. The output is to TB1-7. In operation, the positive command signal is applied to the non-inverting input of U8-B. This amplifier has a very high forward gain which means that even

very small input signals cause its output to saturate in either the positive or negative direction -- depending on whether an accelerating or decelerating command is received.

Accelerating (positive) and decelerating (negative) commands are directed to the ACCEL/DECEL Control, R25. Either signal polarity causes a constant current to flow into the input of integrating amplifier U8-A through R27. The output of the circuit then changes at a linear rate until it has the same magnitude but opposite polarity to that of the input signal. The overall gain of the circuit is approximately minus 1.0 and is set with input resistor R28 and feedback resistor R29. To assure a controlled start-up regardless of input signal condition, the output amplifier, U8-A, is clamped to a zero condition with FET switch Q5 until the controller output contactor is energized.

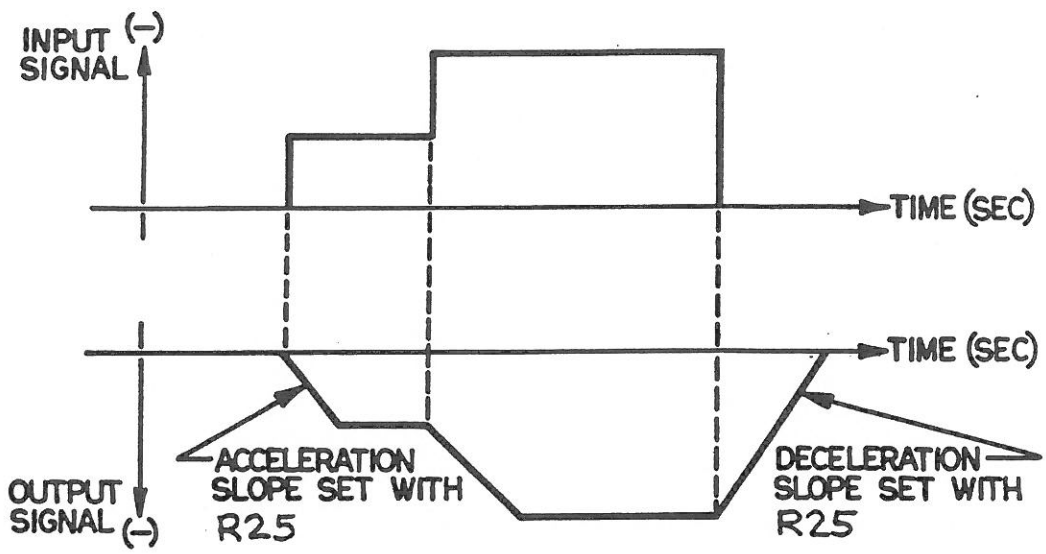

FIGURE 4-5. CONTROLLED ACCELERATION CIRCUIT

The Armature Voltage Amplifier provides a signal, referenced to signal common, which is proportional to the motor armature voltage. This signal is needed for the speed loop amplifier, the field regulator control, the speed comparator circuits and for the tachometer loss detector. The circuit is comprised of operational amplifier U10-A and associated components which are connected in a differential amplifier configuration. The motor armature voltage, wired to connector P1, Pins 5 and 7, is divided down to a level compatible with the operational amplifier circuitry by means of external resistors. The overall circuit gain from motor armature voltage to U10-A output is 0.29 volts/volt for 240V units, and 0.014 volts/volt for 480V units.

Resistors in U9 and R30 are selected to give maximum common mode voltage rejection and capacitors C6 and C7 provide filtering of noise which is commonly present on the armature leads.

Diodes CR10 through CR13 are used to clip any high voltage transients at the input of U10-A.

The Speed Loop Amplifier, U15-A, sums the acceleration speed command signal input of TB1-8 with the speed feedback signal from either the armature voltage amplifier or a motor-mounted tachometer. The resulting signal is amplified through U15-A and applied to the current regulator circuitry as the torque command signal.

When tachometer feedback is used, the DC tachometer is connected to TB1-1 or TB1-3, depending upon the expected maximum output of the tachometer. The tachometer signal is applied to U15A through R23 (the MAX SPEED adjustment), R44 and R45. Capacitors C25 and C26 and resistor R45 form a low frequency "lead" network which is selected for optimum motor response to sudden speed commands. If back EMF feedback is used, the output of the armature voltage amplifier, U10A, at TB1-13 is connected to the tachometer feedback input of TB1-3. Note that constant horsepower field operating range cannot be used with back EMF feedback.

Two other inputs are connected to amplifier U15-A. One is the IR compensation signal from the wiper of potentiometer R22 through R17 and R46. (Turn R22 fully CCW when tachometer feedback is used.) The last input is from P6, Pin 5 through R1 and diode CR16. A voltage from the external tester is connected to this point in order to saturate U15-A for the TORQUE LIMIT SET position.

The gain and frequency response of the amplifier are determined by resistor R77 and capacitors C23 and C24 in conjunction with the STABILITY control R20. FET switch Q8 calmps the amplifier to a zero condition until the contactor is energized.

4.2.1.2 Current Regulator Circuits

The current amplifier, U24-A, sums the current feedback signal from the current transformer at connector P1-2 through R39 with the current command signal through R59. It frequency-compensates the resulting current error signal and applies it to the pulse generator circuits on the A2 board. U24-A is connected as an integrator whose gain, set by feedback components R40, C21 and C22, is selected to give a closed current loop response of approximately 25 Hz. Maximum controller output current (motor torque) is set by controlling the input signal to the current amplifier. This input signal is actually the output of the speed loop amplifier, U15-A. Maximum current with the TORQUE control fully clockwise (CW) for peak controller output is 200% of nameplate rating. Output current can be reduced from the maximum setting down to zero by simply rotating the TORQUE control counterclockwise (CCW). FET switch Q7 cages the amplifier output until the controller is started.

Amplifiers U13-A and B form a di/dt limiter which is used to limit the rate of change of the current command signal to the current loop amplifier. U13-A is connected as a non-inverting comparator (no feedback elements) with an input signal applied through R38 and a feedback signal thru R37. Any differences between the signals will cause the output to switch to either plus or minus saturation (± 10 volts). This saturated signal is then

applied to U13-B through R36, U13-B is connected as an inverting integrator, therefore its output will increase until it reaches the same level as the input signal at R38.

Collectively, these two amplifiers behave as a single amplifier with a gain of one and an output slew rate limited to approximately 0.55 volts/msec.

4.2.1.3 Current Feedback Signal Circuits

The current feedback signal derived from the current transformers is unipolar in nature and must be modified to allow bi-directional operation.

Amplifiers U-3A and B are used to obtain both plus and minus current signals and the FET switches Q1 and Q2 then select the proper polarity to always end up with negative feedback at R39. The gates of these FETS are driven by the Direction Flip-Flop, U32, via a pair of buffer comparators (U16), both on the A2 board.

The switched feedback signal is also applied to amplifier U17-B through U16. Its output is only used for test and monitoring of the output current.

4.2.2 Interlock,Status and Fault LED Circuitry

Both the interlock relay and the firing angle pulses are inhibited when the output of Comparator U25-2 is at a "high" state (+12 volts). When U25-2 goes "low" (-12V), current flow through R99 turns on Q9 to energize the interlock relay (mounted on A3 PC board). The READY LED will be ON when the interlock relay is energized. The DRIVE ON LED is ON when the enable circuit is closed; i.e., +24 VDC is applied to TB1-16.

An interlock condition will result from the following:

4.2.2.1 Phase Loss & Power Loss - The power supply monitor circuit consists of transistor Q10 which will be turned ON if the +24 volt supply exceeds approximately +18 volts and transistor Q11

which is turned on if the potential across the +12V to -12V supplies exceeds 22 volts. If Q10 turns off, the phase loss LED will be ON. If Q11 turns off, the ± 12V LED will be OFF.

4.2.2.2 Overvoltage - The armature voltage signal from U10-A is fed to comparator input U20B through an "absolute value" circuit (U38-A and U38-B). This signal is compared to an adjustable reference voltage (set by U21-A) and causes the output U20-14 to go "low" if the voltage exceeds the set level. Under normal conditions, the output will be high to allow operation.

4.2.2.3 Zero Volts - The armature voltage signal is also fed to comparator input U30-10 where it is compared to a small fixed reference voltage at U20-11. The output, U20-13, will go "low" whenever the output voltage exceeds the reference voltage. The signal is fed to "NAND" gate U33-9 along with the "Controller ON" signal.

"Controller ON" signal is removed while the output voltage is greater than the set level, the interlock relay is de-energized.

4.2.2.4 Tach Loss - The armature voltage signal and tachometer signal are compared in U20A. If the tach signal drops below the armature signal by a sufficient amount, the tach signal is presumed to be open or shorted and the output, U20-1, goes low.

4.2.2.5 Overspeed - The tachometer signal is fed to comparator U20-B and compared to an adjustable reference voltage (set by U21-B). If the tachometer signal exceeds the set level, the output, U20-2, will go low.

4.2.2.6 Field Loss - Signal is generated on the A2 PC assembly. Field current feedback is compared with the MIN FIELD setting on U22-A. If the field current is less than the minimum setting, Field Loss is signalled.

4.2.2.7 Overheat - is signalled when excessive heatsink temperature causes thermal switch to open.

4.2.2.8 Stall Current Limit - The tachometer signal and armature current feedback are fed to comparator U12 and associated components. If the tachometer is less than a preset low level ("stalled") and current is above a certain preset level, then the stall current limit circuit reduces the output current to 10% of the normal TORQUE control setting by turning off FET Q6. It does not latch and does not turn the control off. When the stall is cleared, the current limit will revert to its normal level.

4.2.2.9 Static Current Limit - This circuit is a passive integrator made up of R56 and C33 that is connected to the armature current feedback signal. The voltage and rate of voltage change on capacitor C33 depends on the magnitude of the current signal. Connected to the capacitor is comparator U23-A. The output of this comparator will switch to a low value indicating a running overcurrent fault when the capacitor voltage reaches a value equivalent to 15% of the rated drive current. After a running overcurrent fault the circuit will reset (cooldown) in about 2-1/2 minutes. In operation, this circuit will trip in approximately 2-1/2 minutes when the current is 150% and in one minute when the current is 200%.

4.2.3 Comparator Circuits - As described in Section 3.5, the comparator circuits are usually connected to annunciate SET SPEED, LOW SPEED and speed command present. U42, U44 and U46 are optically coupled transistors which can be switched by comparators on U41 with associated components. Speed command, armature voltage signal, tachometer signal and +12V are readily available at the jumper matrix, and any other signals available on the board could be used if required.

4.2.4.1 DC Power Supplies - Reference Transformer Assembly A4 is used to isolate and transform the incoming 240/480 VAC down to 23 VAC for the power supplies. The three transformers have their primaries connected in a delta configuration across the incoming power lines. Jumper wires on the circuit board (A, B and C, three places) are factory-connectable for controller operation on 240 or 480 VAC power. There are four DC supply voltages on the circuit board; +24V and -24V unregulated, +12V and -12V regulated voltages. The unregulated supplies are used in the pulse amplifier circuits and for driving relays which are external to the circuit board. The regulated voltages are

used for integrated circuit operational amplifier power, in the pulse generator circuits and as reference voltages.

The 24 volts is obtained with diodes CR1, CR2 and CR4-7 which are connected in a plus and minus three-phase half-wave rectifier configuration. These outputs are filtered with capacitors C16 and C13. The ± 24 volts is then regulated down to ± 12 volts by the regulators Q5 and Q4. Additional high frequency filtering is provided by capacitors C29 and C28.

4.2.5 SCR Firing Logic

The voltages from the reference transformers are also applied to the input of the synchronizing circuits (one for each phase). The logic outputs of these circuits control the ramp generator and the pulse distribution circuits which create the SCR firing pulses. These firing pulses go to amplifier circuits which drive the pulse transformers, (one for each SCR), located on the snubber boards. These isolate the main PC boards from power circuit voltages.

The control allows current to flow only in one direction at a time. The requested direction of current (from the di/dt limiter) and the actual current determine the direction of current flow, forward or reverse. If a current direction change is required, the current is decreased to zero and locked out, the turnaround logic disables firing pulses to one-half of the power bridge and enables firing pulses to the other half. The current regulator is then enabled again.

4.2.6 Field Current Regulator

The field regulator is a two-thirds wave power circuit. The Field Rectifier Module REC1 contains three diodes and one SCR which is phase-controlled by a current regulator circuit.

Armature voltage and an adjustable reference voltage, CROSS-OVER, are the inputs to operational amplifier U30-B which is operated as an integrator. The output from U30-7 is fed through potentiometer R92 to set MAX FIELD current command.

Diodes CR14 and CR12 act as a gate network to select, as the field current request, either the output of U30-7 or the voltage set by R77, the MIN FIELD setting, whichever is greater.

This field current request is compared with the field current feedback signal at the field current regulator U23-A. The output of U23-A is compared with the output of a ramp generator to create the SCR firing pulse train.

As the magnitude of the armature voltage signal approaches and equals the setting of the CROSSOVER potentiometer, the output of U30-B tries to go negative. However, CR18 then starts to conduct, reducing the field current and thereby the armature voltage.

Ten seconds after the drive enable circuit is opened, +12V is applied to the input of U30B. This clamps the output to zero and field current is reduced to the level of the MIN SPEED setting for field economizing during idle periods.

5.0 MAINTENANCE & TROUBLESHOOTING

SAFETY NOTICE: This equipment should be installed, adjusted and serviced by qualified personnel familiar with electrical equipment and the contents of this manual. High voltage (240/480 VAC) is present when the power is on. Use appropriate high voltage troubleshooting techniques.

Accidental short circuits can result in high currents, equipment damage and personnel injury. Make any module changes with power off. Check for short circuits and loose connections before applying power. Use ground isolated instruments for all measurements.

5.1 CONTROLLER MAINTENANCE

ALWAYS TURN OFF THE AC POWER before attempting any controller maintenance. The only periodic maintenance for the CMC SPINDLEMATE Controller is an occasional inspection for accumulated dust or dirt on heatsinks and circuit boards. Also, shop dust in some environments tends to be electrically conductive and can cause controller malfunction. If cleaning is needed, carefully vacuum loose dirt or use dry compressed air. Check and tighten where necessary power connections at terminals, contactor and fuses.

The SPINDLEMATE Controller is designed for module replacement for easy and straightforward servicing. Modules are connectorized or have terminal strips so that no desoldering is required in case replacement is necessary. Size A & B controllers have swing-out circuit board assemblies with two captive fastening thumbscrews for SCR and module access.

The Sizes C & D controllers have a hinged swing-out panel with two captive fastening thumbscrews for SCR assembly and module access. Circuit board assemblies are mounted to the swing-out panel with a front-hinged plexiglass cover for viewing LED status indicators, access to adjustments and for mating the tester plug. (Refer to Figure 5-1.)

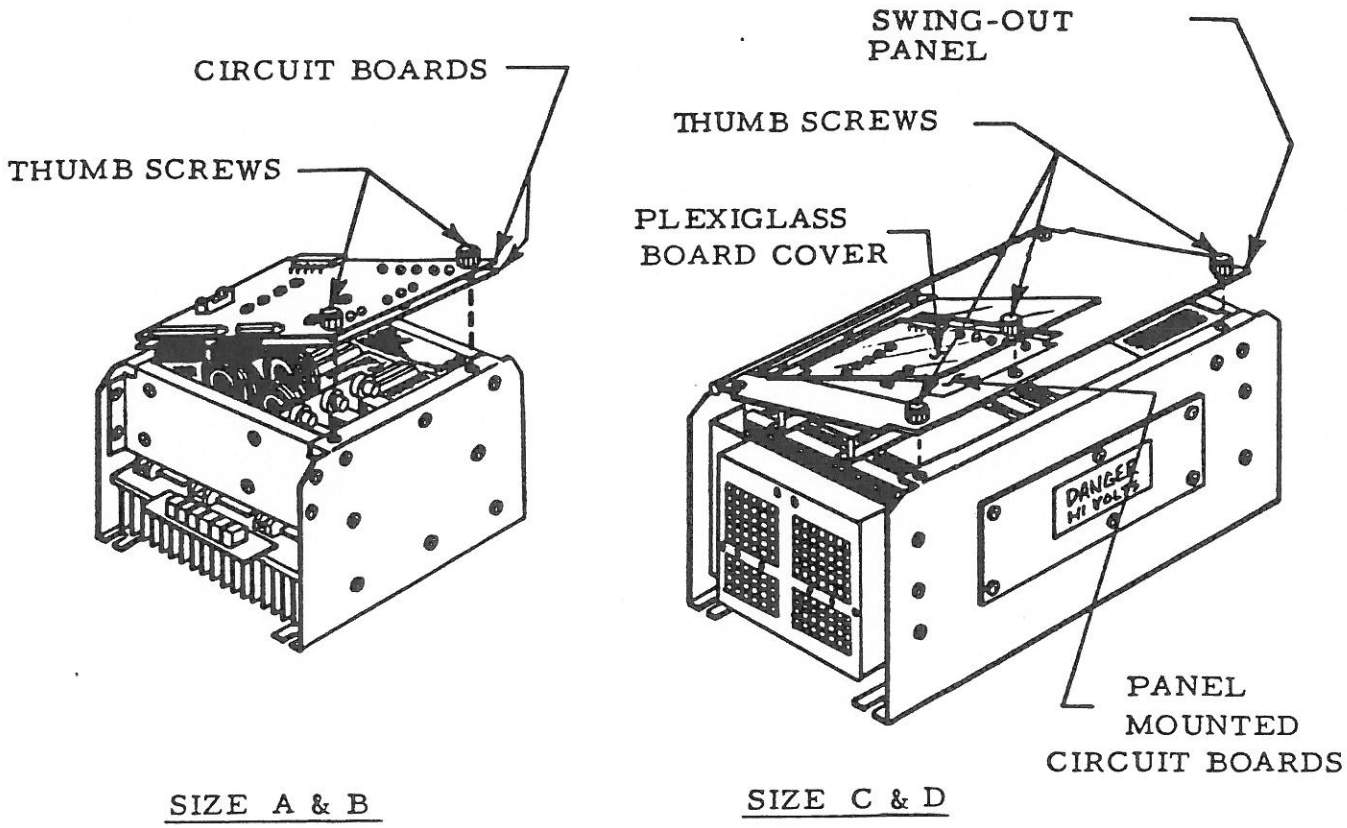

FIGURE 5-1. SWING-OUT CIRCUIT BOARDS

5.1.1 Main Printed Circuit Board (Refer to Figure 5-2)

1) Removal

a) Pull off TB1 and TB2 plug-in strips from circuit board A1.

b) Disconnect circuit board connectors A1P1, A2P2, A2P3 and A2P4 from circuit board A1. Use a wide blade screwdriver if necessary per Figure 5-2.

c) Remove the four corner mounting screws from the circuit board assemblies.

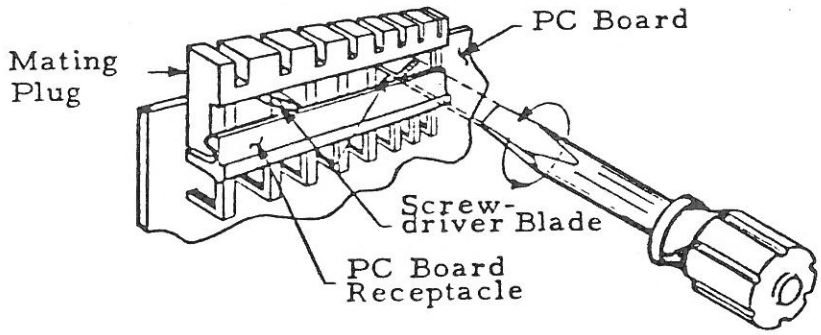

FIGURE 5-2. MODULE CONNECTOR REMOVAL

2) Installation

Reverse above procedure. Take care to polarize connector and plug-in terminal strips.

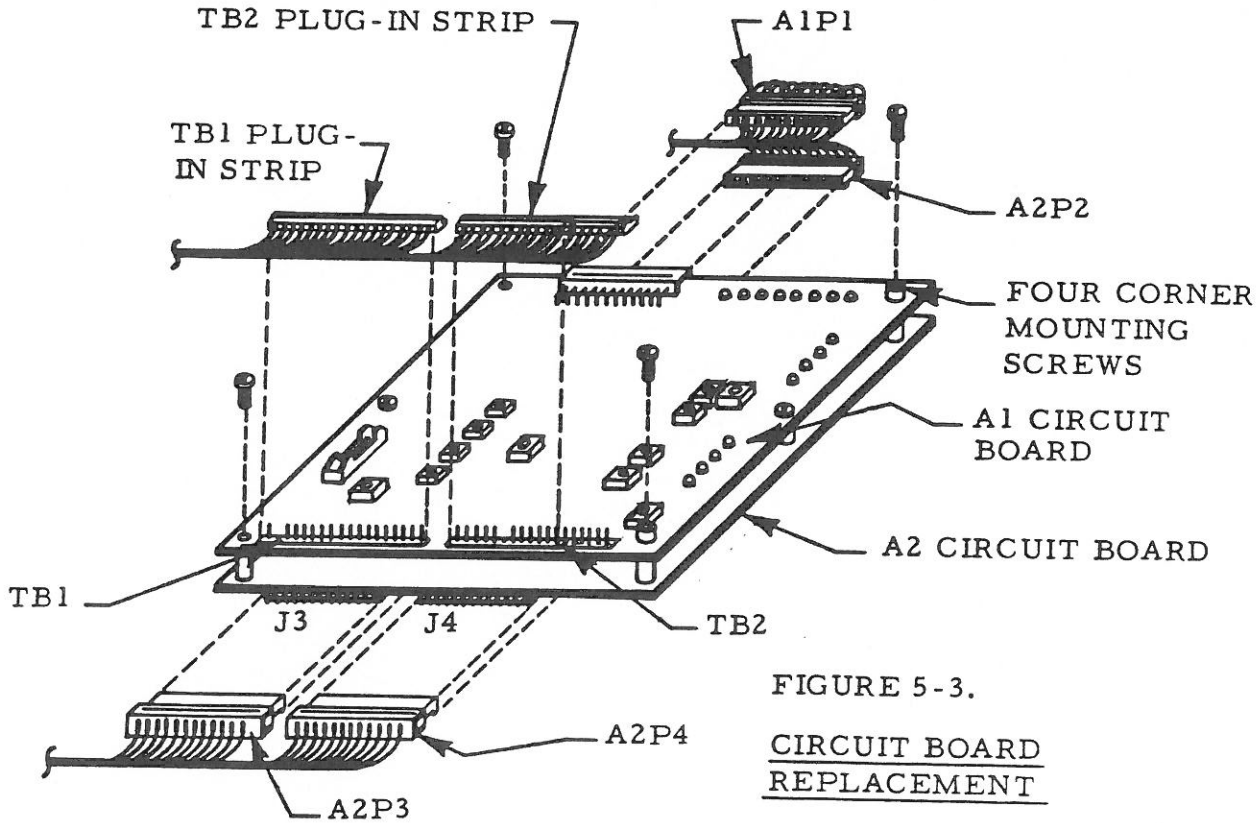

FIGURE 5-3.

CIRCUIT BOARD REPLACEMENT

5.1.2 SCR Assembly (Refer to Figures 5-4 thru 5-8)

The SCRs used in the SPINDLEMATE Controller are sized conservatively to handle the peak currents and voltages encountered in this application. SCR failures are rare. If an SCR failure is suspected, check for shorts using a Simpson type ohmmeter from anode to cathode (plus/minus bus-bar to AC terminal on Size A and B controllers; left or right heatsink to AC bus-bar on Size C & D controllers) with the SCR assembly installed in the controller. Resistance should be high (greater than 500 Kohms on the RX 10,000 scale) for either ohmmeter polarity.

NOTE: "Hockey puck" type SCRs used in the SPINDLEMATE Sizes C & D Controllers must be compressed between anode and cathode surfaces to assure a contact with the internal chip.

The SCR gates can also be checked with the ohmmeter but the gate leads must first be removed. On Sizes A and B controllers, disconnect gate lead terminals from slimline SCR and on Size C & D controllers, disconnect gate leads from snubber board gate terminals. In these cases, gate to cathode resistance in either polarity should be low (less than 100 ohms on the RX1 scale).

5.1.3 SCR Assembly Replacement, Sizes A and B (Refer to Figures 5-4 & 5-5)

1) Removal (Procedure applies to any of the six slimline SCR modules)

a) Pull off the gate lead terminals at the SCR assembly to be replaced.

b) Remove the SCR AC and plus/minus bus-bar screws to disconnect the snubber, line and power wiring.

c) Remove the two SCR heatsink mounting screws and remove the SCR.

2) Installation

a) The new SCR should be installed with thermal compound between it and the heatsinks. (Usually the compound left on the heatsink when the old one is removed is sufficient.) Replace using the two mounting screws.

b) Take care to correctly connect color coded gate, color coded snubber and power wires per Figure 5-4 and appropriate interconnect diagram in Drawing Section 6.0.

5.1.4 SCR Assembly Replacement, Size C & D (Refer to Figure 5-6)

1) Removal (Procedure applies to any of the six SCR assemblies)

a) Pull off the gate lead connector at the snubber board of the SCR assembly to be replaced.

b) Remove the bolt that connects the power lead to the AC bus bar with a 7/16 hex combination wrench or with a 7/16 hex swivel socket and ratchet wrench (preferred). (Size D 9/16 wrench or 9/16 socket.)

c) Remove the two 1/4-20 x 5/8 long, Grade 5, mounting bolts from the armature bus mounting angles with a 7/16 socket, with extension and ratchet wrench. (Size D 1/2 socket.)

CAUTION: CHECK FOR CORRECT WIRING, LOOSE WIRES AND HARDWARE BEFORE APPLYING POWER

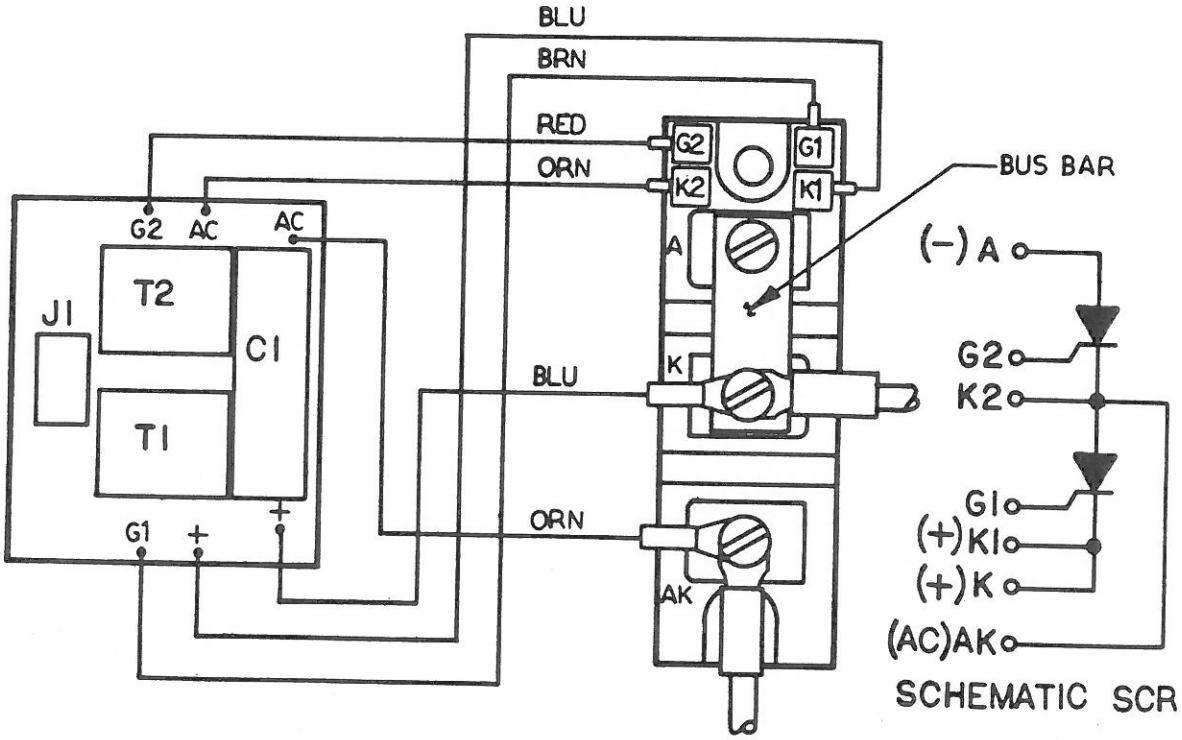

FIGURE 5-4. SLIMLINE SCR WIRING, SIZES A AND B

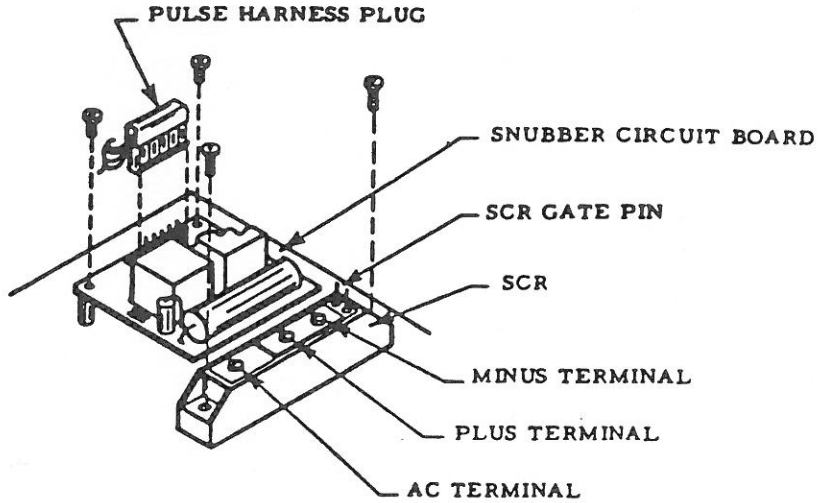

FIGURE 5-5. SLIMLINE SCR REPLACEMENT, SIZES A & B

2) Installation

Reverse above procedure. The SCR assembly should be installed with an aluminum joint compound between its mounting bars and the armature bus mounting angles. (Usually the compound left on the mounting angles is sufficient.) Take care to correctly polarize gate lead connector at the snubber board.

CAUTION:	CHECK FOR LOOSE WIRES AND HARDWARE BEFORE APPLYING POWER.

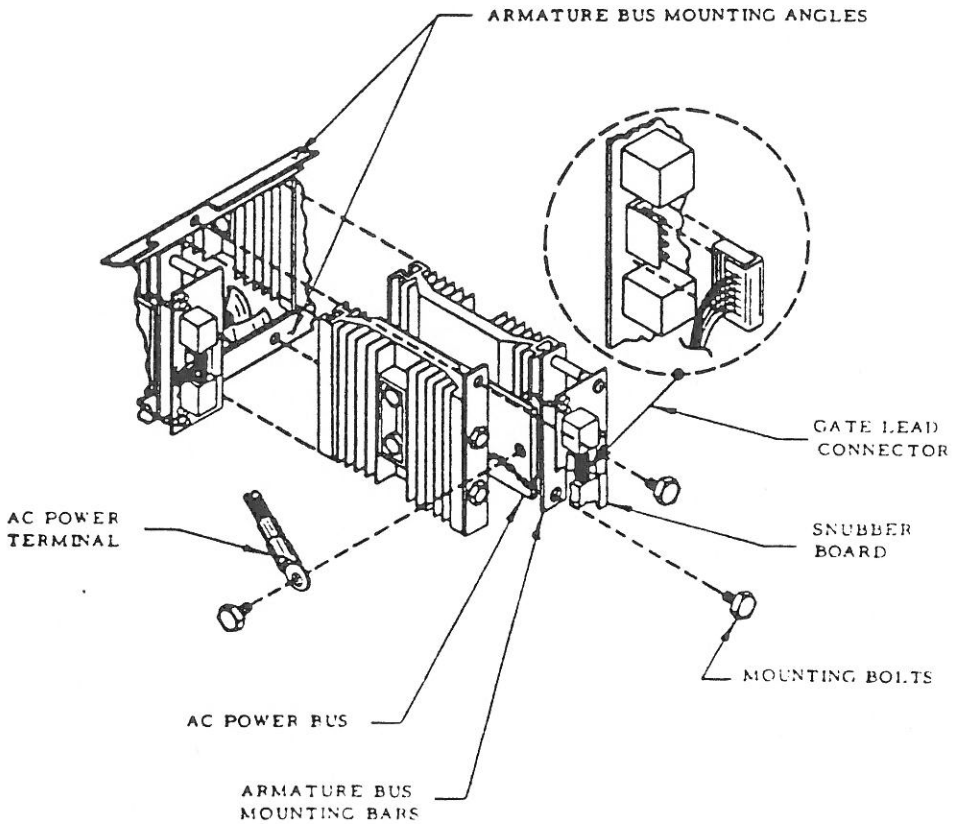

FIGURE 5-6. SCR ASSEMBLY REPLACEMENT, SIZES C & D

5.1.5 Individual SCR Replacement, Sizes C & D

The SCR assemblies are designed for easy replacement as functional and fully tested modules. To minimize "downtime" and assure proper performance it is strongly recommended that repairs be made on a module substitution basis as described in Paragraph 5.1.4. Individual SCRs can, however, be field-replaced provided proper tools are utilized and procedures are followed.

CAUTION:	Improperly assembled heatsinks can cause further damage and may void the equipment warranty.

Tools Required

1) Socket wrench with 7/16" socket (Size D 9/16" socket.)
2) Screwdriver
3) SCR force calibration gauge
4) Electrical joint thermal compound

1) Removal

a) Remove SCR module from SPINDLEMATE controller as described in 5.1.4 and take it to a convenient, clean work location.

b) Remove the screw which connects the brown AC snubber lead at the AC bus bar.

c) Remove the gate and cathode lead screws from terminals on snubber board, each SCR.

d) Loosen the two bolts in the SCR clamp with 7/16" socket wrench, each one turn, then unscrew completely from right heatsink. SCR can now be removed. (Size D 9/16" socket.)

NOTE: Keep parts clean. Take care when handling SCRs and heatsinks not to damage contact surfaces or gate/cathode leads.

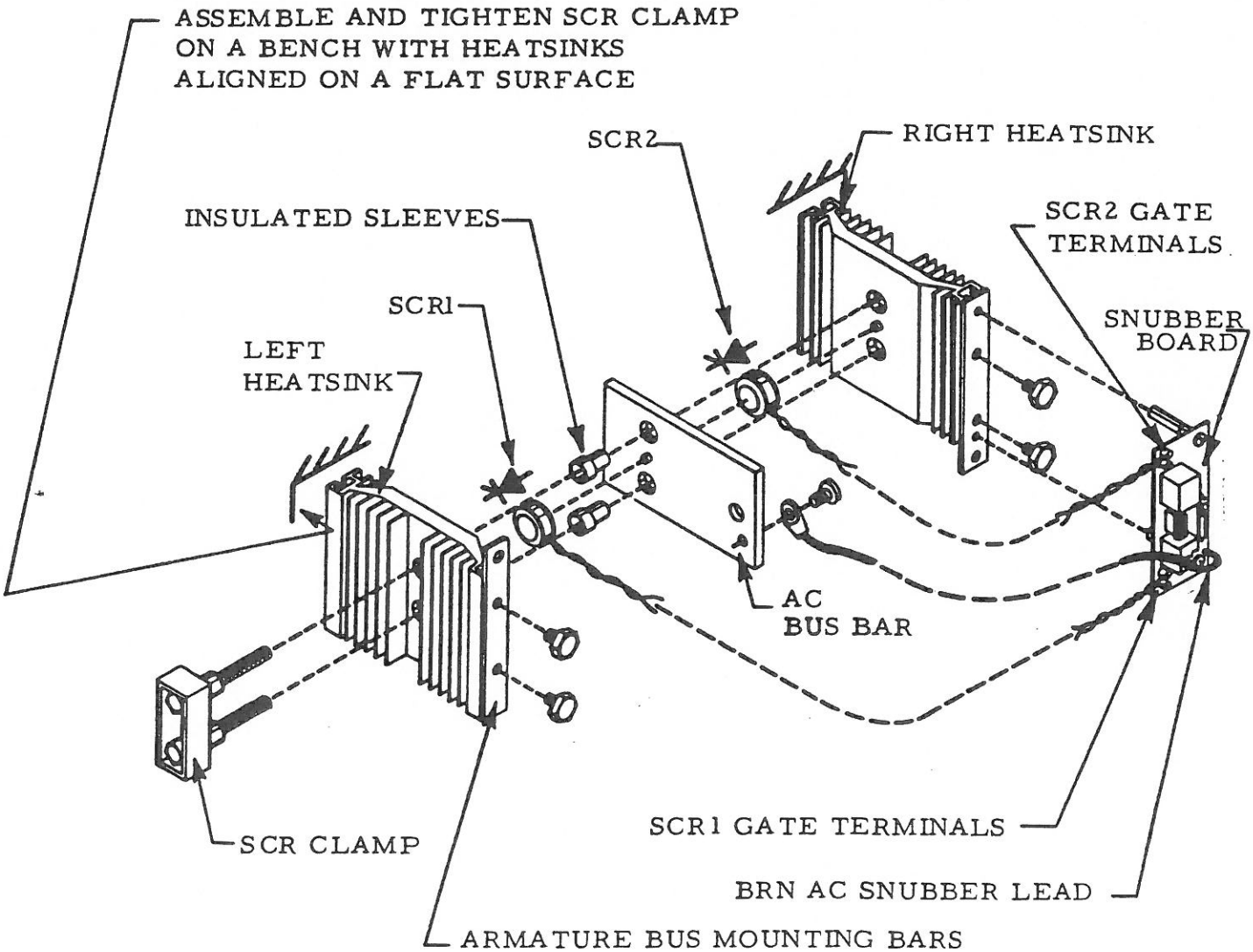

FIGURE 5-7. EXPLODED VIEW, SCR ASSEMBLY SIZES C & D

2) Installation

a) Make certain that all contact surfaces are clean and free of scratches.

b) Apply a small amount of thermal joint compound to both pole-faces of both SCRs to be installed.

c) Align right SCR on roll pin on right heatsink and position AC bus-bar on top of the SCR with its roll pin aligned. Similarly, place left SCR on the bus-bar and install left heatsinks on top of it. Refer to Figure 5-7.

d) Install the clamp through the left heatsink, the bus bar (with sleeve spacer) and screw bolts into right heatsink. Tighten bolts finger tight a little at a time to keep thread insertion equal. Stop and refer to Figure 5-7 and be certain that:

- o SCRs are positioned with cathode facing left
- o SCRs are rotated with gate/cathode leads toward front of assembly
- o AC bus bar has captive nut on right side
- o Assembly is square and SCRs are centered on roll pins

e) Tighten SCR clamp on a bench with heatsinks aligned on a flat surface. Tighten each bolt 1/2 turn with 7/16" socket wrench. (Size D 9/16" socket.)

f) Place force calibration gauge firmly against clamp spring to check torque. See Figure 5-8. Tighten each bolt a little at a time until correct force is achieved.

g) Install gate/cathode leads at terminals on snubber board. White lead is the gate; red lead is the cathode.

h) Install the brown AC snubber lead to the AC bus bar.

i) Install the SCR module assembly per 5.1.4.

5.1.6 Reference Transformer Assembly, A4

1) Removal

a) Disconnect the seven fast-on terminal wires connected to the assembly

b) Remove the four corner mounting screws

2) Installation

Reverse above procedure. Take care to correctly connect color coded wire fast-on terminals per interconnect diagram in Drawing Section 6.0.

CAUTION:	CHECK FOR CORRECT WIRING, LOOSE CONNECTIONS AND HARDWARE BEFORE APPLYING POWER

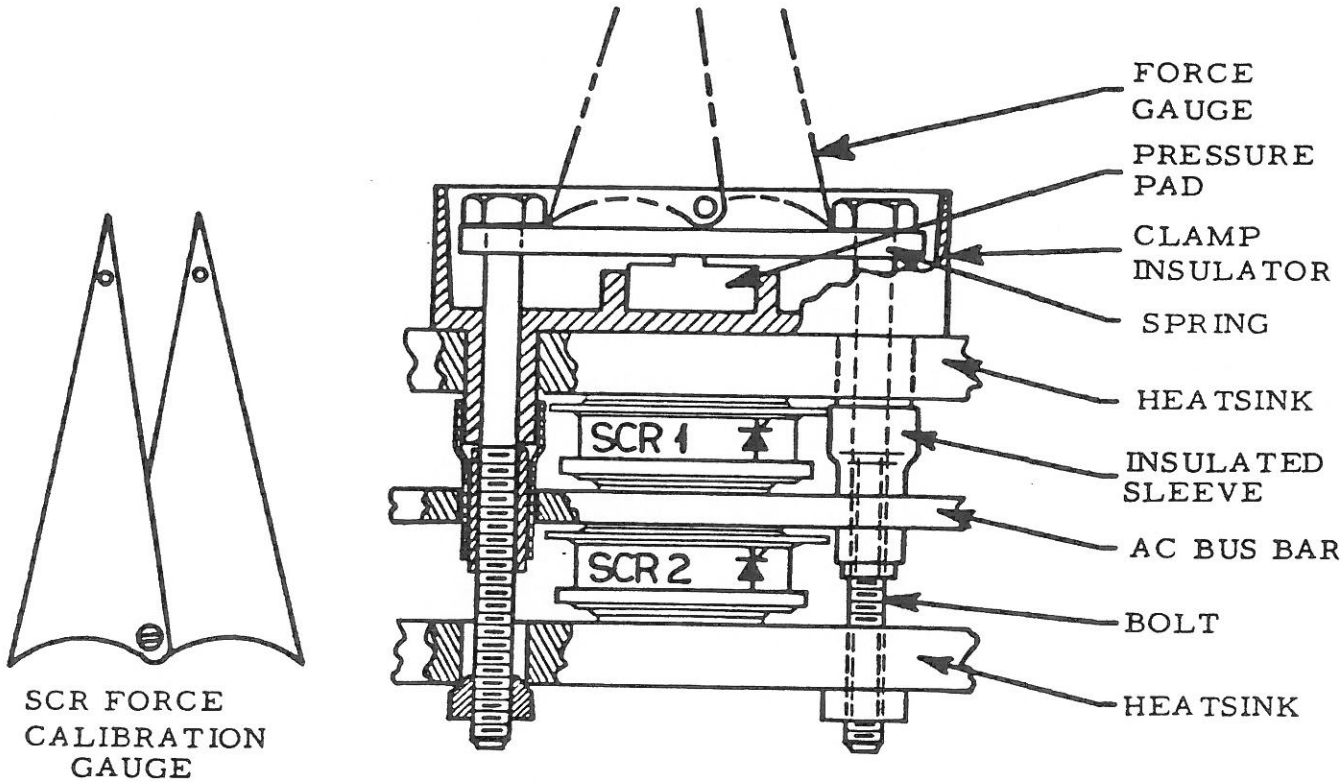

LESS THAN RATED FORCE
Tighten bolts alternately 1/4 turn until holes coincide.

CORRECT FORCE
Holes lined up

EXCESSIVE FORCE
Loosen nuts and start over. DO NOT try to adjust spring force by backing off. Always loosen and start over.

FIGURE 5-8. SCR FORCE GAUGE

5.1.7 Field Isolator & Interlock Circuit Board Module, A3

1) Removal

a) Disconnect circuit board connectors A3P1 and A3P2 from circuit board. Use a wide blade screwdriver if necessary per Figure 5-2.

b) Disconnect the three fast-on terminal wires connected to the circuit board and the two fast-on wires connected on the Field Power Circuit Module, REC 1. On Size C controllers it will be necessary to remove the Reference Transformer Assembly, A4, per 5.1.6 for fast-on terminal access.

c) Remove the four corner mounting screws from the circuit board assembly.

2) Installation

Reverse above procedure. Take care to polarize connectors and to correctly connect color coded wire fast-on terminals per interconnect diagram in Drawing Section 6.0.

CAUTION:	CHECK FOR CORRECT WIRING, LOOSE CONNECTIONS AND HARDWARE BEFORE APPLYING POWER

5.1.8 Field Power Circuit Module, REC 1

1) Removal

a) Remove the Reference Transformer Assembly, A4, per 5.1.6 for module access (Size "C" only).

b) Disconnect the seven fast-on terminal wires connected to the module.

c) Remove the two mounting screws

2) Installation

a) The new module should be installed with thermal compound between it and the chassis. (Usually the compound left on the chassis when the old one is removed is sufficient.) Replace using the two mounting screws.

b) Take care to correctly connect color coded wire fast-on terminals per interconnect diagram in Drawing Section 6.0.

c) Replace Reference Transformer Assembly per 5.1.6. (Size "C" Only)

CAUTION:	CHECK FOR LOOSE WIRING, LOOSE CONNECTIONS AND HARDWARE BEFORE APPLYING POWER.

5.2 TROUBLESHOOTING

SAFETY NOTICE: This equipment should be installed, adjusted and serviced by qualified personnel familiar with electrical equipment and the contents of this manual. High voltage (480 VAC) is present when power is on. Use appropriate high voltage troubleshooting techniques.

Accidental short circuits can result in high currents, equipment damage and personnel injury. Make any module changes with power off. Check for short circuits and loose connections before applying power. Use ground-isolated instruments for all measurements.

To minimize the equipment "downtime", it is strongly recommended that any repairs be made on a module substitution basis. DO NOT ATTEMPT TO REPLACE COMPONENT PARTS ON THE CIRCUIT BOARD. This could cause further problems and void the equipment warranty.

Troubleshooting should begin with a systematic check of command signals and power to the controller.

- Check input speed command signals - do they reach controller terminal strip?
- Check the "Enable" signal to the controller terminal strip.
- Check external limit switches and interlocks
- Check 115 VAC control power and AC input power

Make a physical inspection, looking for the following:

- Open fuses or circuit breakers
- Abnormally hot components
- Loose terminals
- Burned parts or insulation

NOTE: If a fault has developed on a system which was working properly, DO NOT MAKE ANY ADJUSTMENTS. The problem must be properly diagnosed by observing the LED indicators and using troubleshooting charts.

5.2.1 Status and Fault LED Indicators

Status LEDs

AC Power	-	Incoming line power applied to controller
± 12 Volts	-	Normal operation of on-board power supplies
READY	-	Controller is set to operate when the "Enable" circuit is closed. (No fault present)
DRIVE ON	-	"Enable" circuit is closed, normal drive operation.

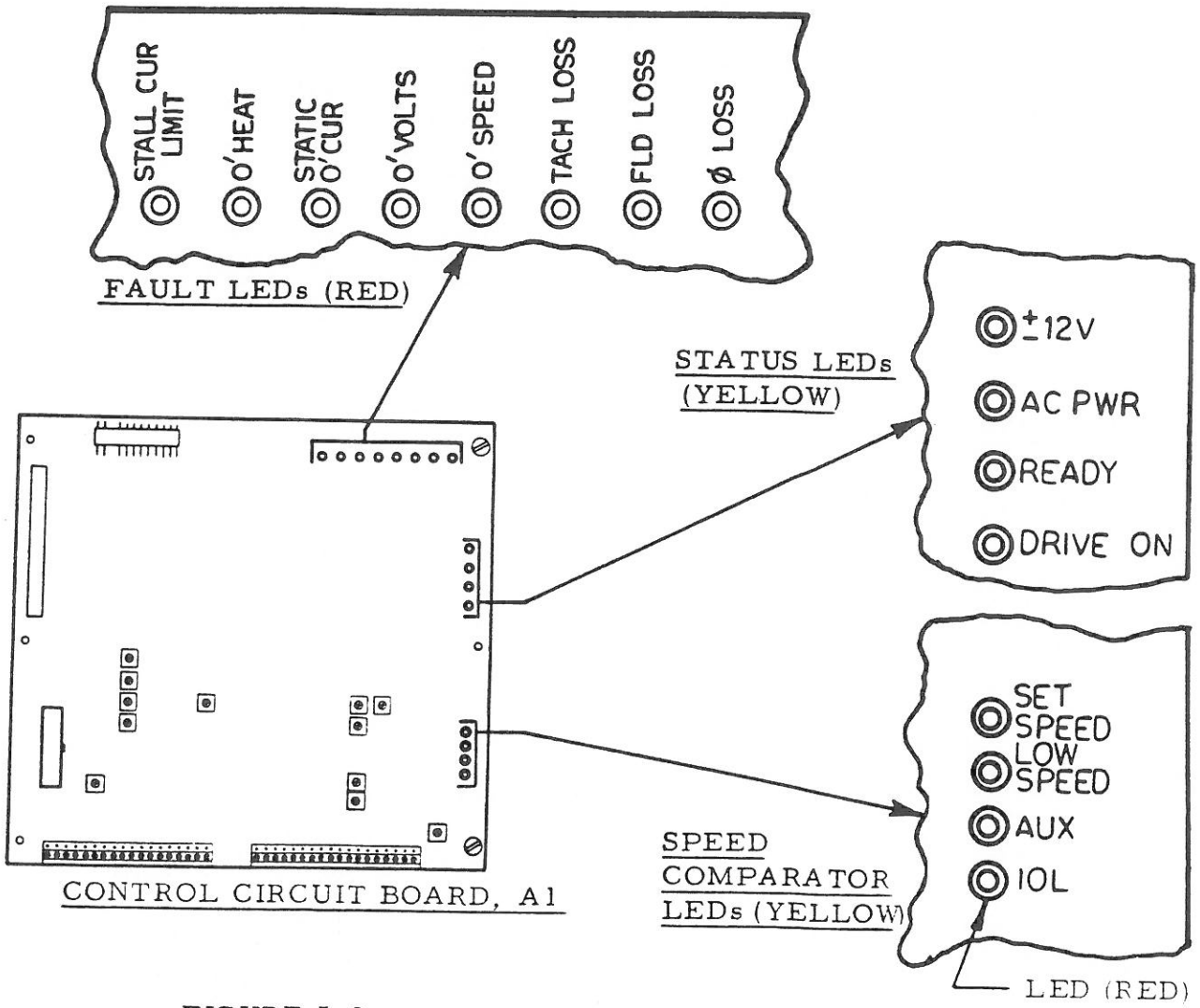

FIGURE 5-9

STATUS & FAULT LED INDICATORS

Speed Comparator LEDs

SET SPEED	-	Motor speed is within SET SPEED adjustment range.
LOW SPEED	-	Motor speed is above LOW SPEED trip point
AUX	-	Normally wired to indicate signal present

Fault LEDs

* Ø LOSS	-	Loss of incoming power line phase voltage
FLD LOSS	-	Loss of motor shunt field current
TACH LOSS	-	Open or shorted tachometer feedback signal
O'SPEED	-	Motor overspeed as detected by tachometer signal.
O'VOLTS	-	Motor armature overvoltage
STATIC O'CUR	-	Excessive armature current
O'HEAT	-	Excessive heatsink temperature
STALL CUR LIMIT	-	Armature current without motor rotation for more than 1 sec (non-latching).
IOL	-	Instantaneous Overload

If any of the above FAULT conditions occur (except STALL CURRENT LIMIT), it will latch the corresponding LED on and the drive off. Interlock relay CR1 is also de-energized to open the 115 VAC control circuit to AC contactor M1. To reset, depress the external RESET pushbutton or momentarily remove and reapply line power.

The STALL CURRENT LIMIT circuit reduces the output current to 10% of the normal TORQUE control setting - it does not latch or turn the control off. When the stall is cleared, the current limit will revert immediately to its normal level.

WARNING: In the process of troubleshooting a system fault, DO NOT JUMPER OUR THE SAFETY INTERLOCK CIRCUITRY. This could cause dangerous motor overspeed.

6.0 DATA SHEET

An approved Job Data Sheet will be supplied with each Motor Controller specifying the motor controller nameplate data, the motor data and the shipping documents, as follows:

CMC DATA SHEET
NAMEPLATE - DOCUMENT - APPROVAL

JOB NO.	PART NUMBER

MOTOR CONTROLLER NAMEPLATE:

CMC CLEVELAND MACHINE CONTROLS, INC.
WESTERN OPERATIONS
ONE SALLY COURT, REDWOOD CITY, CALIFORNIA 94063

DWG NO. 545D
MOD. SP1-500- SER.
INPUT 460 VOLTS 3 Ø 60 HZ
OUTPUT 0± 500 VDC A. ARM.
HP 300 VDC 0 TO A. FLD
MAX AMBIENT 55°C JOB NO.

CUSTOMER

- ☐ MODULE
- ☐ PANEL ASSY
- ☐ ENCLOSURE ASSY
- ☐ WITH INTEGRAL TESTER

MOTOR DATA	ARM VOLTS:	RPM BASE: TOP RATED:
	FIELD VOLTS:	FIELD CURRENT MAX: MIN:
HP	FIELD SENSE RESISTOR A3R9:	OHMS (A MAX)

SHIPPING DOCUMENTS

NUMBER	DOCUMENT
SS-00-781	INSTRUCTION MANUAL, SPINDLEMATE

DISTRIBUION:			
JOB FILE	ENGR		
ENGR	TEST		
Q C	Q C		
	APPROVED		DATE

7.0 DRAWINGS

DRAWING NO.	TITLE
545D4120X	SPINDLEMATE Panel, 5 HP - 50 HP, Fuseless with CB & Tester
545B4300X	SPINDLEMATE Fuseless Controller Diagram, 5HP - 50 HP
545B26516	A1 Control PCB Assembly 0.5 - 5 Second Accel/Decel, Unipolar Current Signal with Restart in Motion
545D01814	A2 Logic & Firing PCB Assembly with Field Regulator
545D0030X	A3 Field Isolator & Interlock PCB Assembly
545D4620X	Spindlemate Panel, 60 HP Fuseless with CB & Tester
545B4640X	Spindlemate Fuseless Controller Diagram, C Size.

REVISIONS			
LTR	DESCRIPTION	DATE	APPROVED
C	RELEASE FOR PRODUCTION	1-14-86	JA
C_1	ADDED R1, R2, R3, C1, C2, C3 & BKTS.	1-28-86	RCC
C_2	CHANGED C1-C3, R1-R3 & FU1, FU2 POSITIONS.	1-30-86	BA
D	TB1-18 & TB1-19 CMD WAS ±8VDC	2-12-86	BA
E	ADDED CB2-TB & #14, #16 WIRE SIZE.	2-19-86	BA
F	TB1-23 WAS TO CB2-AUX N.O. 5-30HP T1 WITH FUSES CHANGED TO 150 VA.	3-17-86	BA
G	CHANGED PANEL LAYOUT PER CUSTOMER REQUEST. ECO #W637	4-17-86	BA

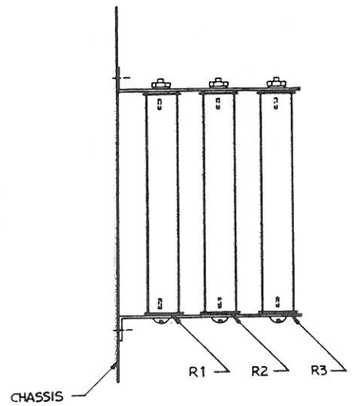

R1, R2, R3
MOUNTING DETAIL

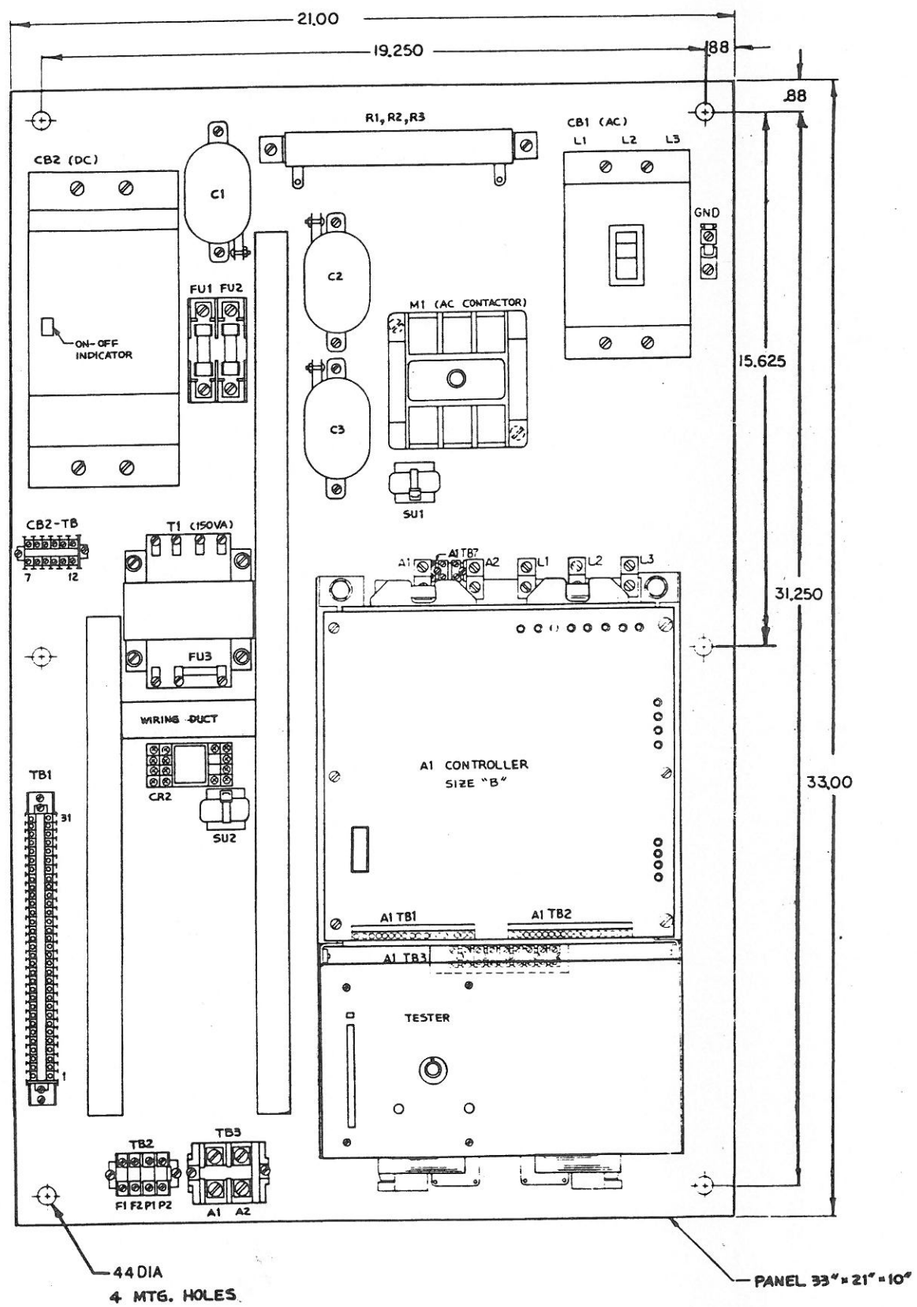

CONFIGURATION						
HP	PART NO.	MODEL NO.	WIRE SIZE #L LINE	WIRE SIZE #A ARM.	CB1 AC	CB2 DC
5	545D41299	SP1-500-05 BTSP	#12	#12	20A	20A
7.5	545D41287	SP1-500-07 BTSP				
10	545D41275	SP1-500-10 BTSP				
15	545D41263	SP1-500-15 BTSP	#8	#8	50A	50A
20	545D41251	SP1-500-20 BTSP				
25	545D41248	SP1-500-25 BTSP				
30	545D41236	SP1-500-30 BTSP	#6	#4	75A	100A
40	545D41212	SP1-500-40 BTSP				
50	545D41224	SP1-500-50 BTSP	#4		100A	

ITEM NO OR REF DES	PART NO OR IDENT	DESCRIPTION	CODE IDENT	SPEC/MFG
PARTS LIST				

UNLESS OTHERWISE SPECIFIED DIMENSIONS ARE IN INCHES
TOLERANCES
FRACTIONS ±
DECIMALS
2 PLACES ±
3 PLACES ±

MATERIAL
SEE PARTS LIST
545D4120X

CONTRACT NO 5171, 5103

PREPARED — DATE 1-24-86
CHECKED BA 1/27/86
APPROVED 1/27/86
APPROVED
APPROVED

CLEVELAND MACHINE CONTROLS, INC.
WESTERN OPERATIONS

SPINDLEMATE PANEL 5HP-50HP, FUSELESS, WITH C.B. SIZE "B" WITH TESTER

SIZE D | CODE IDENT | 545D4120X | REV G

SCALE 1/2:1 | SHEET 1 OF 2

DWG NO 545D4120X | SIZE | NEXT ASSY

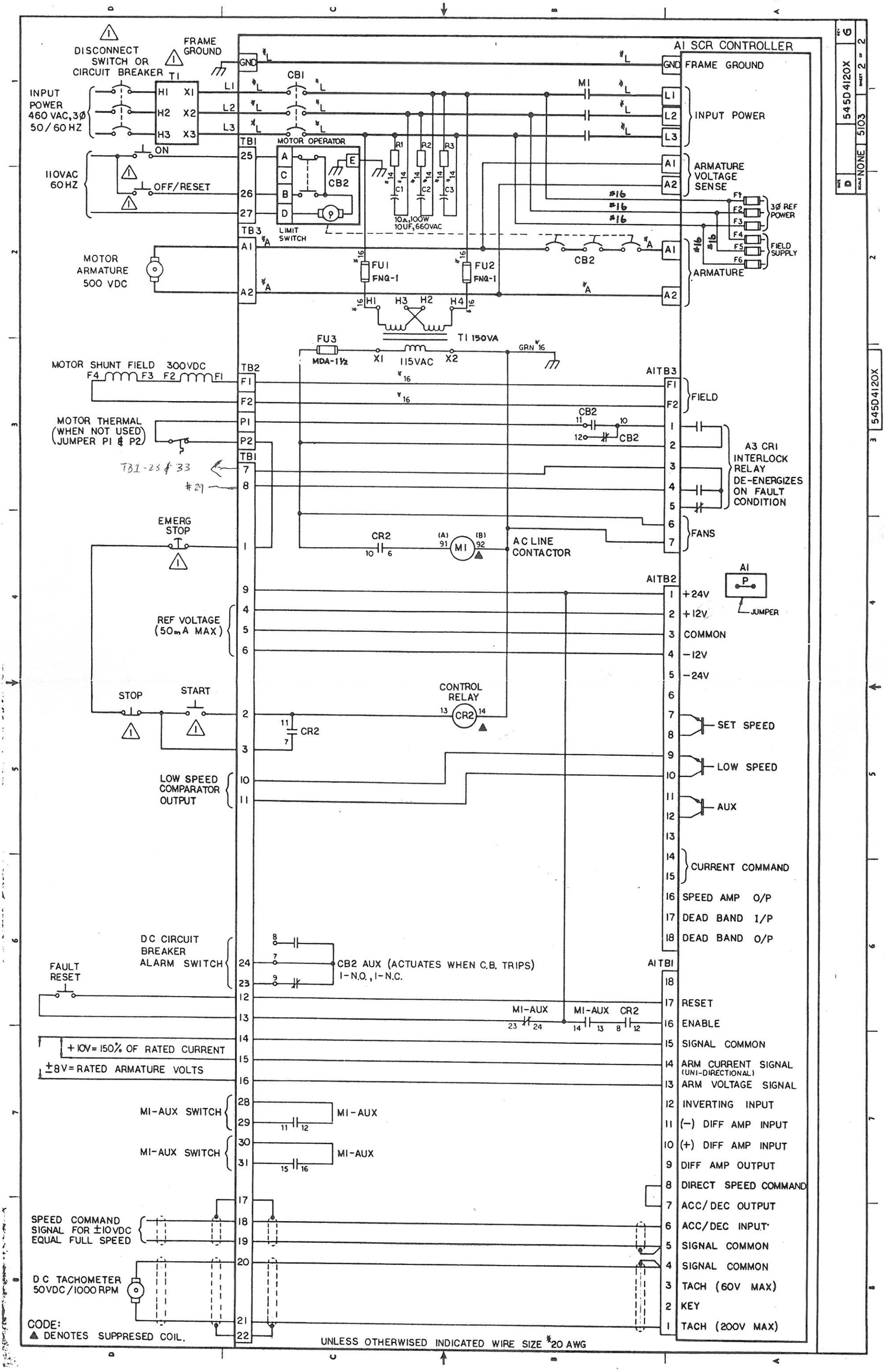
A1 SCR CONTROLLER
DISCONNECT SWITCH OR CIRCUIT BREAKER
FRAME GROUND
INPUT POWER 460 VAC, 3Ø 50/60 HZ
T1
H1 X1
H2 X2
H3 X3
ON
OFF/RESET
110VAC 60HZ
MOTOR OPERATOR
CB2
LIMIT SWITCH
R1 R2 R3
C1 C2 C3
10Ω, 100W
10UF, 660VAC
MOTOR ARMATURE 500 VDC
FU1 FNQ-1
FU2 FNQ-1
T1 150VA
FU3 MDA-1½
115VAC
MOTOR SHUNT FIELD 300VDC
MOTOR THERMAL (WHEN NOT USED JUMPER P1 & P2)
TB1-23 & 33
#29
EMERG STOP
CR2
M1
AC LINE CONTACTOR
REF VOLTAGE (50mA MAX)
STOP
START
CONTROL RELAY
LOW SPEED COMPARATOR OUTPUT
DC CIRCUIT BREAKER ALARM SWITCH
CB2 AUX (ACTUATES WHEN C.B. TRIPS) 1-N.O., 1-N.C.
FAULT RESET
M1-AUX
+10V = 150% OF RATED CURRENT
±8V = RATED ARMATURE VOLTS
M1-AUX SWITCH
SPEED COMMAND SIGNAL FOR ±10VDC EQUAL FULL SPEED
D.C TACHOMETER 50VDC/1000 RPM
CODE:
▲ DENOTES SUPPRESED COIL.
UNLESS OTHERWISED INDICATED WIRE SIZE #20 AWG
INPUT POWER
ARMATURE VOLTAGE SENSE
3Ø REF POWER
FIELD SUPPLY
ARMATURE
FIELD
A3 CR1 INTERLOCK RELAY DE-ENERGIZES ON FAULT CONDITION
FANS
+24V
+12V
COMMON
-12V
-24V
JUMPER
SET SPEED
LOW SPEED
AUX
CURRENT COMMAND
SPEED AMP O/P
DEAD BAND I/P
DEAD BAND O/P
RESET
ENABLE
SIGNAL COMMON
ARM CURRENT SIGNAL (UNI-DIRECTIONAL)
ARM VOLTAGE SIGNAL
INVERTING INPUT
(-) DIFF AMP INPUT
(+) DIFF AMP INPUT
DIFF AMP OUTPUT
DIRECT SPEED COMMAND
ACC/DEC OUTPUT
ACC/DEC INPUT
SIGNAL COMMON
SIGNAL COMMON
TACH (60V MAX)
KEY
TACH (200V MAX)
545D4120X
5103
NONE
SHEET 2 OF 2
REV G

LTR	REV DESCRIPTION	DATE
B	ADDED R5-C4 TO Z1-Z6 ECO W760	12-22-87

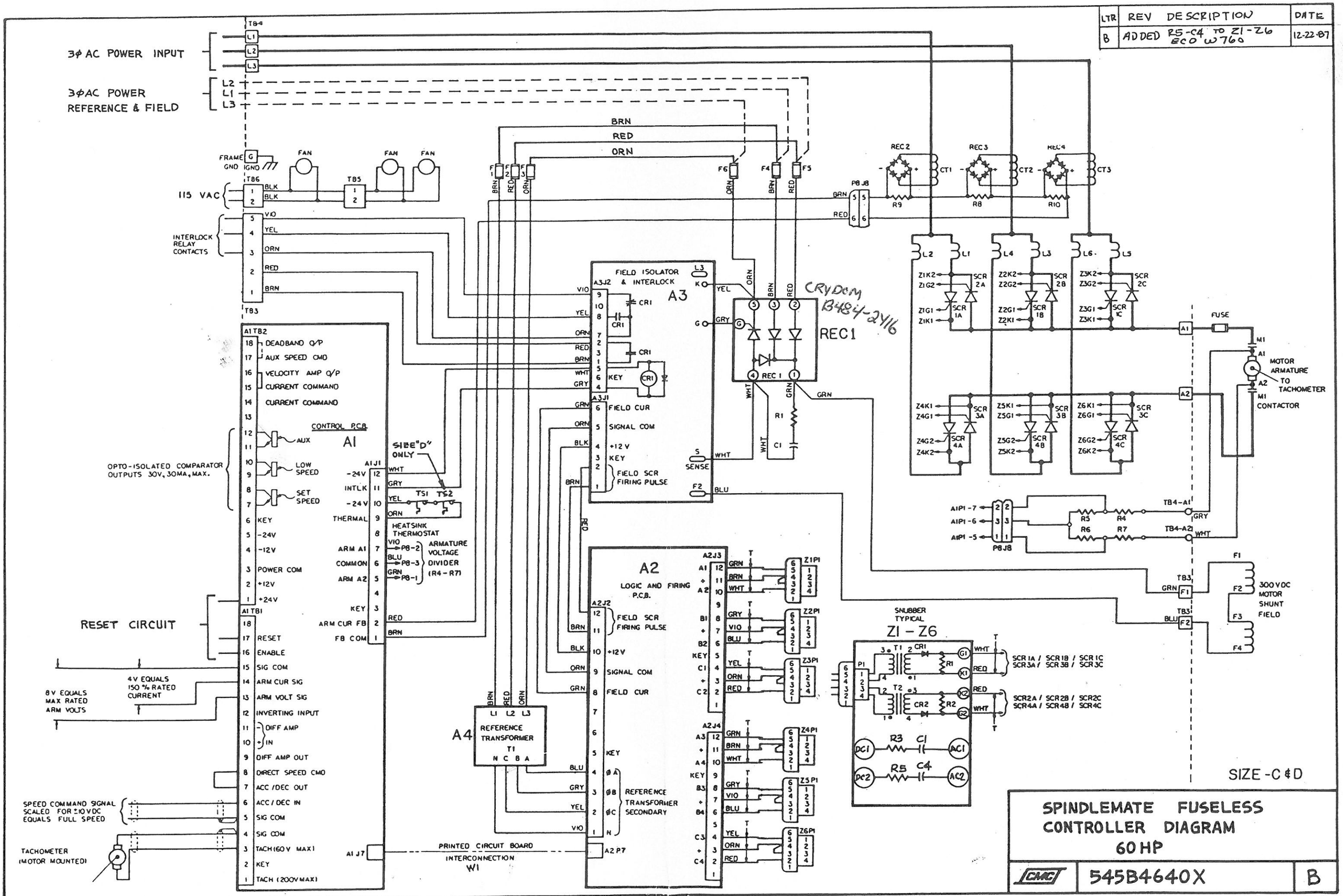

SPINDLEMATE FUSELESS CONTROLLER DIAGRAM 60 HP

CMC 545B4640X B

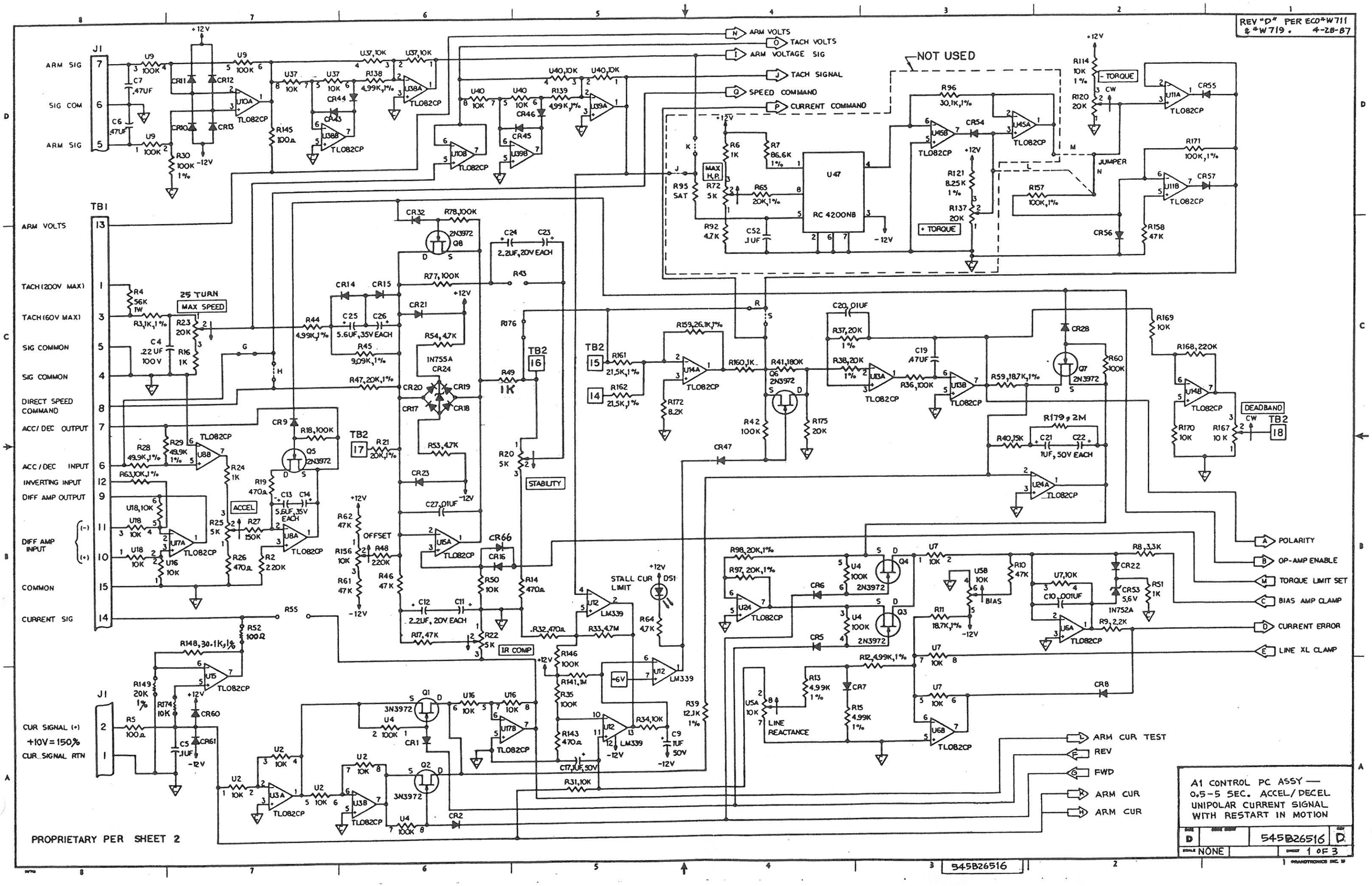
REV "D" PER ECO #W711 & #W719. 4-28-87
J1
ARM SIG
SIG COM
ARM SIG
TB1
ARM VOLTS
TACH (200V MAX)
TACH (60V MAX)
SIG COMMON
SIG COMMON
DIRECT SPEED COMMAND
ACC/DEC OUTPUT
ACC/DEC INPUT
INVERTING INPUT
DIFF AMP OUTPUT
DIFF AMP INPUT
COMMON
CURRENT SIG
CUR SIGNAL (+)
+10V = 150%
CUR SIGNAL RTN
ARM VOLTS
TACH VOLTS
ARM VOLTAGE SIG
TACH SIGNAL
SPEED COMMAND
CURRENT COMMAND
NOT USED
RC 4200NB
U47
TL082CP
25 TURN
MAX SPEED
ACCEL
OFFSET
STABILITY
IR COMP
STALL CUR LIMIT
LM339
LINE REACTANCE
JUMPER
- TORQUE
+ TORQUE
MAX H.P.
DEADBAND
POLARITY
OP-AMP ENABLE
TORQUE LIMIT SET
BIAS AMP CLAMP
CURRENT ERROR
LINE XL CLAMP
ARM CUR TEST
REV
FWD
ARM CUR
ARM CUR
A1 CONTROL PC ASSY —
0.5-5 SEC. ACCEL/DECEL
UNIPOLAR CURRENT SIGNAL
WITH RESTART IN MOTION
545B26516
NONE
1 OF 3
PROPRIETARY PER SHEET 2

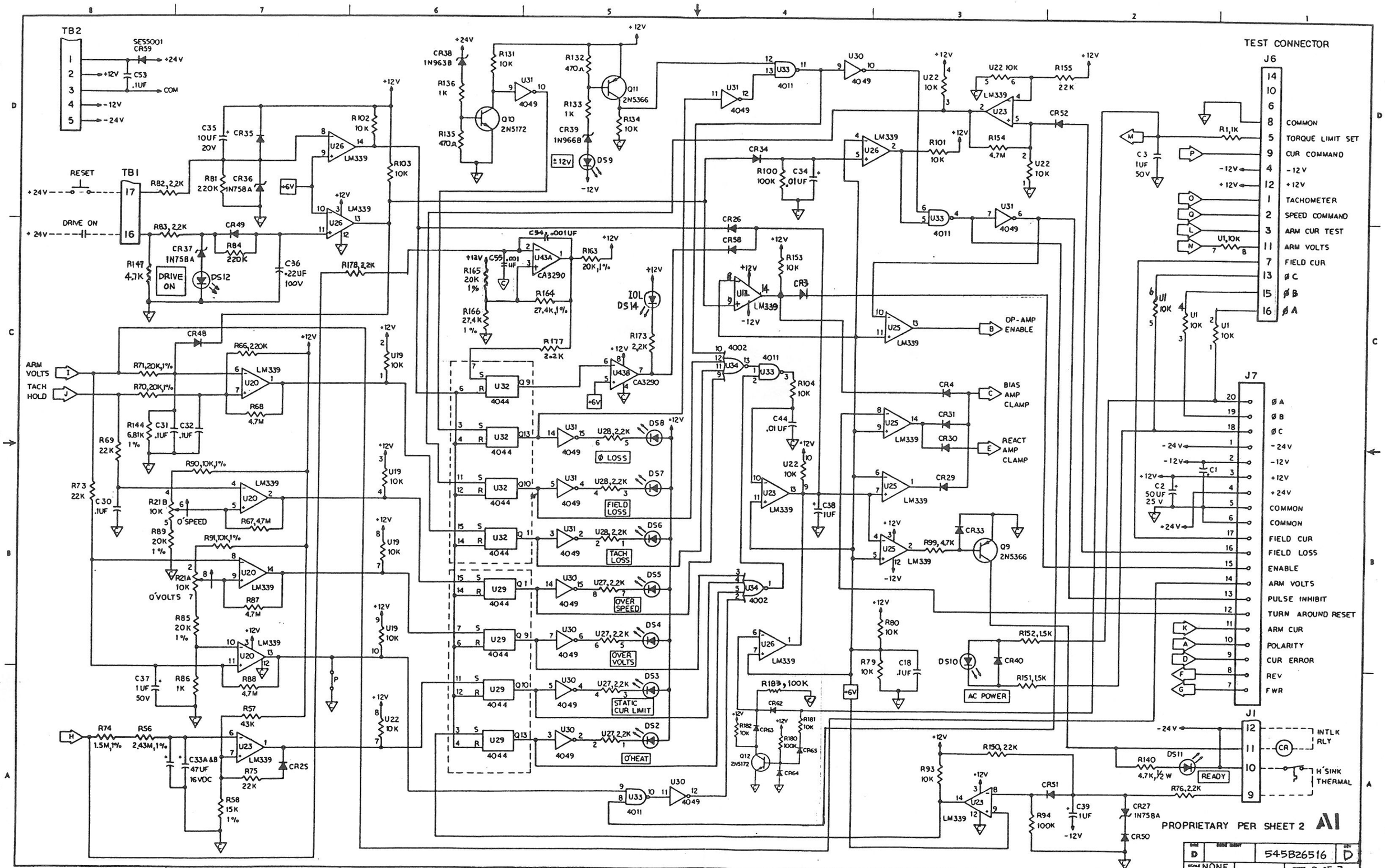
TB2
SES5001
CR59
+24V
+12V
C53
.1UF
COM
-12V
-24V
TB1
RESET
DRIVE ON
R82, 2.2K
R83, 2.2K
CR49
R84
220K
CR37
1N758A
DS12
DRIVE ON
R147
4.7K
C36
.22UF
100V
R178, 2.2K
C35
10UF
20V
CR35
R81
220K
CR36
1N758A
+6V
R102
10K
R103
10K
U26
LM339
R131
10K
U31
4049
R136
1K
R135
470Ω
Q10
2N5172
R132
470Ω
Q11
2N5366
R133
1K
CR39
1N966B
R134
10K
±12V
DS9
CR38
1N963B
U33
4011
U30
4049
U22 10K
R155
22K
U23
LM339
CR52
R101
10K
R154
4.7M
U22
10K
CR34
R100
100K
C34
.01UF
CR26
CR58
R153
10K
CR3
U12
LM339
-12V
U25
LM339
OP-AMP ENABLE
BIAS AMP CLAMP
REACT AMP CLAMP
CR4
CR31
CR30
CR29
CR33
Q9
2N5366
R99, 4.7K
R80
10K
R79
10K
C18
.1UF
DS10
CR40
R152, 1.5K
R151, 1.5K
AC POWER
TEST CONNECTOR
J6
COMMON
TORQUE LIMIT SET
CUR COMMAND
-12V
+12V
TACHOMETER
SPEED COMMAND
ARM CUR TEST
ARM VOLTS
FIELD CUR
ØC
ØB
ØA
R1, 1K
C3
1UF
50V
U1, 10K
U1
10K
J7
ØA
ØB
ØC
-24V
-12V
+12V
+24V
COMMON
COMMON
FIELD CUR
FIELD LOSS
ENABLE
ARM VOLTS
PULSE INHIBIT
TURN AROUND RESET
ARM CUR
POLARITY
CUR ERROR
REV
FWR
C1
C2
50UF
25V
ARM VOLTS
TACH HOLD
R71, 20K, 1%
R70, 20K, 1%
R66, 220K
R68
4.7M
LM339
U20
CR48
R144
6.81K
1%
C31
.1UF
C32
.1UF
R69
22K
R73
22K
C30
.1UF
R90, 10K, 1%
R21B
10K
O'SPEED
R67, 4.7M
R89
20K
1%
R91, 10K, 1%
R21A
10K
O'VOLTS
R87
4.7M
R85
20K
1%
R86
1K
C37
1UF
50V
R88
4.7M
R57
43K
R74
1.5M, 1%
R56
2.43M, 1%
C33A&B
47UF
16VDC
R75
22K
R58
15K
1%
CR25
U23
LM339
C55
.001UF
C54
.001UF
U43A
CA3290
R165
20K
1%
R166
27.4K
1%
R163
20K, 1%
R164
27.4K, 1%
R177
2.2K
U32
4044
Q9
Q13
Q10
U29
Q1
Q101
Q13
U19
10K
U22
10K
U28, 2.2K
DS8
Ø LOSS
DS7
FIELD LOSS
DS6
TACH LOSS
U27, 2.2K
DS5
OVER SPEED
DS4
OVER VOLTS
DS3
STATIC CUR LIMIT
DS2
O'HEAT
IOL
DS14
R173
2.2K
U438
CA3290
U34
4002
R104
10K
C44
.01UF
C38
1UF
R183, 100K
CR62
R182
10K
CR63
R181
10K
R180
100K
CR65
CR64
Q12
2N5172
R93
10K
R150, 22K
CR51
R94
100K
C39
1UF
CR27
1N758A
CR50
R140
4.7K, ½W
DS11
READY
R76, 2.2K
J1
INTLK RLY
H'SINK THERMAL
CR
PROPRIETARY PER SHEET 2
545B26516
D
NONE
2 OF 3

545B26516

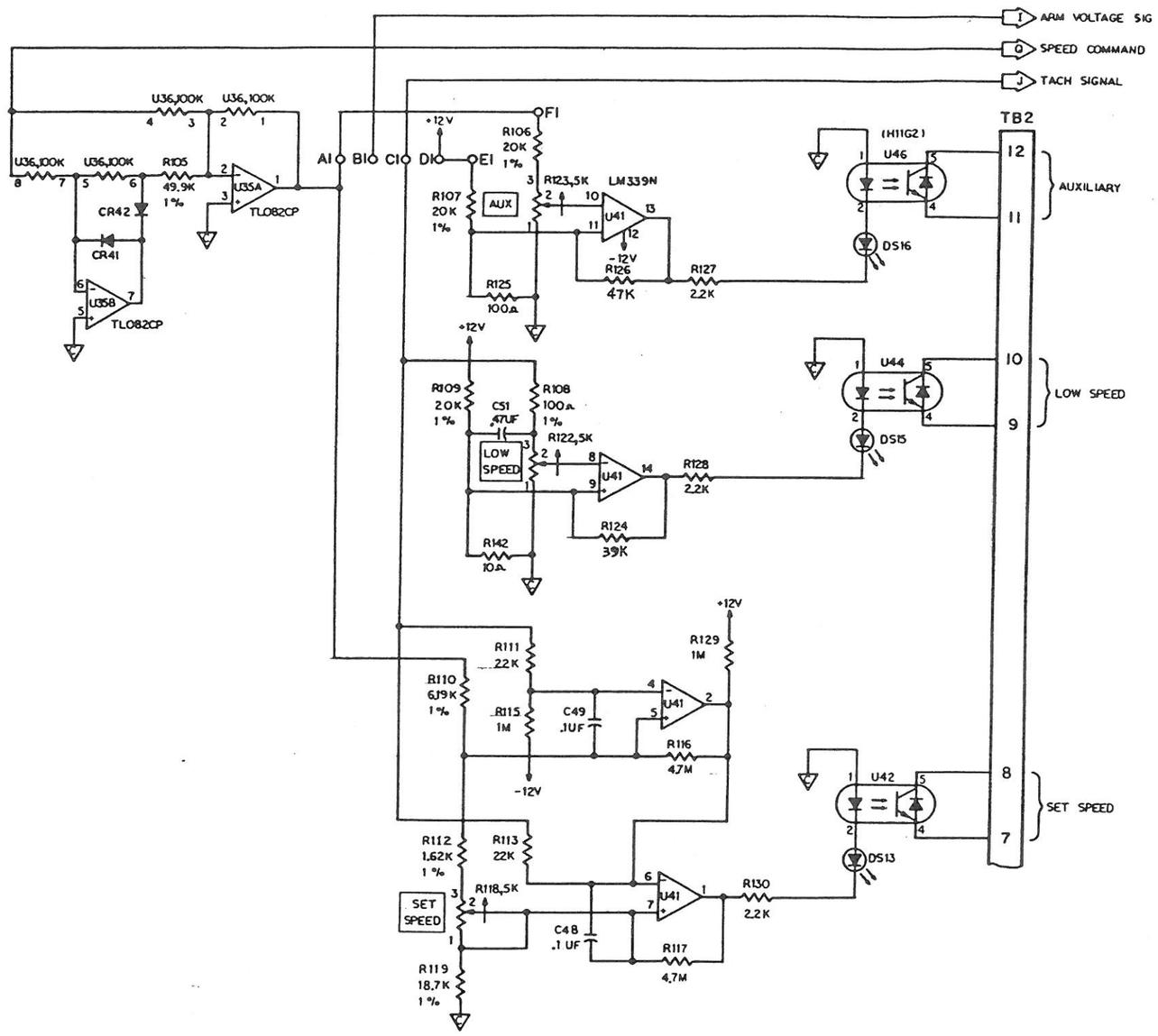

LAST REFERENCE DESIGNATION USED	
USED	NOT USED
C55	
CR61	
DS16	
J7	
Q11	
R178	
TB2	
U47	

DECOUPLING CAPS

+12V	−12V
C15	C8
C29	C41
C43	C46
C45	C16
C50	C28
C42	

A1

PROPRIETARY PER SHEET 2

D		545B26516	D
NONE		3 OF 3	

545B26516

REVISIONS			
LTR	DESCRIPTION	DATE	APPROVED
A	RELEASE FOR PRODUCTION	8-28-85 IEC	[illegible]
B	CHANGES PER ECO # 302	8/4/86 [illegible]	[illegible]
C	P/L CHANGES ONLY SEE ECO # 321	5/4/87 [illegible]	[illegible]
D	ECO#366; R41 WAS 243K, IS 243Ω (1% [illegible])	[illegible]	[illegible]
E	ECO # 455: C46, C47 WERE 5.6 UF	[illegible]	[illegible]
F	ECO # 505. change R47, add R48 to allow 50Hz	[illegible]	[illegible]
G	REVISED PER ECO 558	7-25-85	BD
G1	REVISED PER ECO # W648.	4-8-86	BD
H	REMOVED PLUG P7, ECO # W695.	2-24-87	[illegible]
H1	CHANGED TITLE PER ECO W765	2-8-88	BD

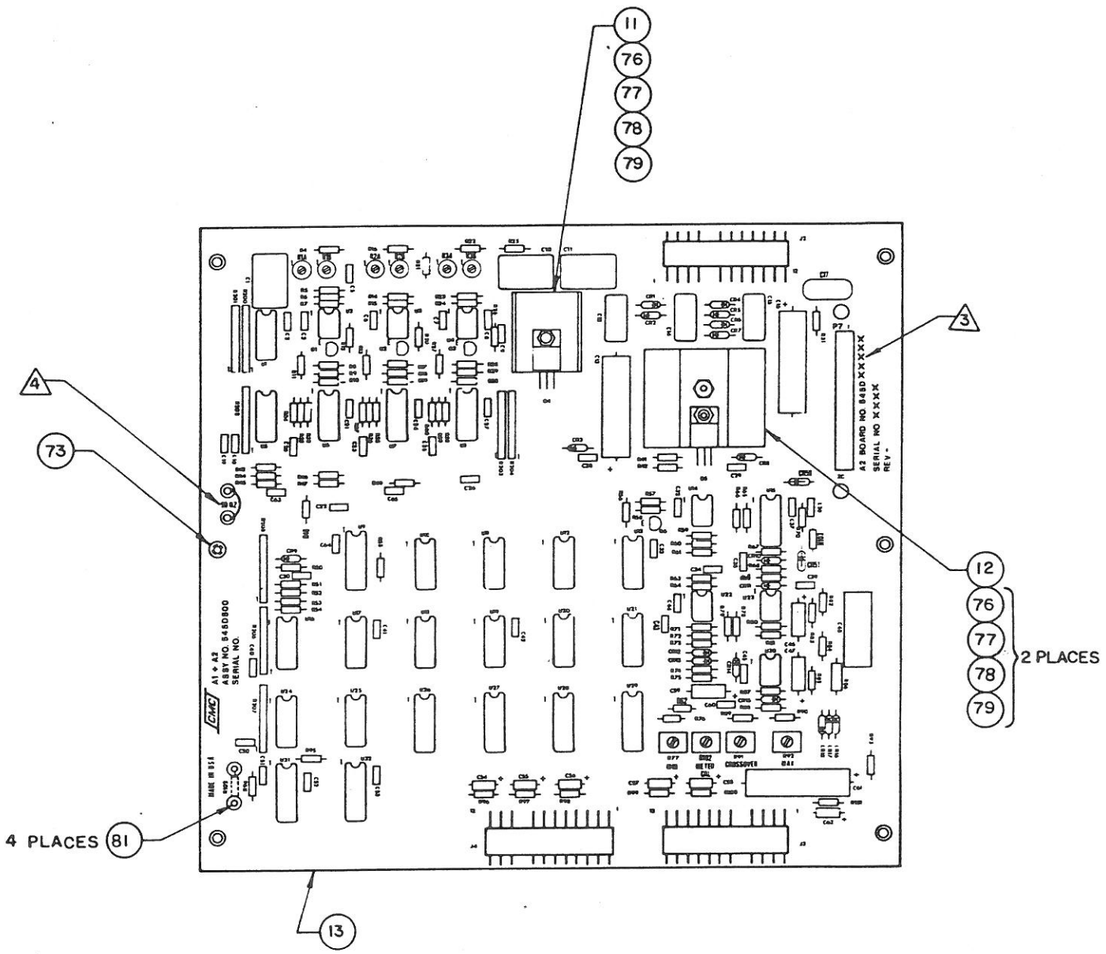

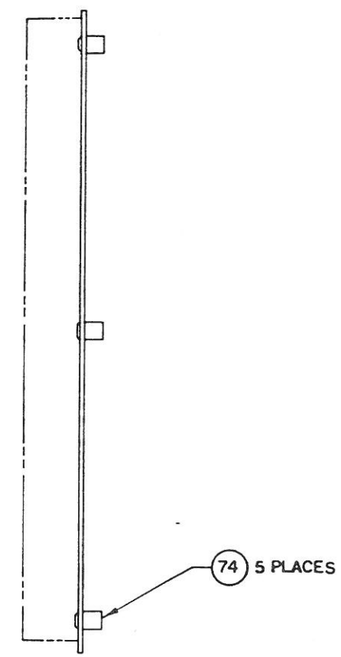

NOTES: UNLESS OTHERWISE SPECIFIED.
1. SYMBOLS AND ABBREVIATIONS PER MIL-STD-100.
2. REMOVE BURRS AND BREAK SHARP EDGES.

3 RUBBER STAMP ISSUE LETTER AND SERIAL NUMBER APPROX AS SHOWN.

4 REMOVE JUMPER FOR 50 HZ OPERATION.

Q1 Q2 Q3 & Q6

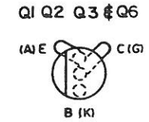

TRANSISTOR MOUNTING
TOP VIEW

P/N 545D01814 A2

-4	-3	-2	-1	ITEM NO. REF. DES.	PART NO. OR IDENT	DESCRIPTION	CODE IDENT	SPECIFIC
QTY REQUIRED PER SHOW NO.					PARTS LIST			

UNLESS OTHERWISE SPECIFIED DIMENSIONS ARE IN INCHES
TOLERANCES
FRACTIONS ±
DECIMALS
2 PLACES ±
3 PLACES ±
MATERIAL: SEE PARTS LIST
545D0180X

CONTRACT NO. 9513
IEC 3-10-87

CMC CLEVELAND MACHINE CONTROLS, INC. WESTERN OPERATIONS

PRINTED CIRCUIT BOARD ASSY
LOGIC & FIRING WITH
FIELD WEAKENING

SIZE	CODE IDENT	DWG NO	REV
D	33831	545D0180X	H1

SCALE 1 = 1 SHEET 1 OF 4

545D0180X

INTEGRATED CIRCUIT POWER SUPPLY/ PIN ASSIGNMENT

REFERENCE DESIGNATION	DESCRIPTION	MANUFACTURES PART NUMBER	GROUND PIN	+12 PIN	−12 PIN
U11, U12, U13, U17, U19, U20, U21, U24	GATE, QUAD NAND	MC14011BCP	7	14	
U10, U18, U25	GATE, QUAD NOR	MC14001BCP	7	14	
U1	GATE, QUAD EXCLUSIVE OR	MC14070BCP	7	14	
U9	HEX INVERTER	MC14049BCP	8	1	
U32	J-K DUAL FLIP FLOP	MC14027BCP	8	16	
U15	QUAD, NAND SCHMIDT	CD4093B	7	14	
U5, U6, U7, U8, U16	QUAD COMPARTOR	LM339M		3	12
U2, U3, U4, U14, U22, U23, U30	OP AMP	TI TL082CP		8	4
U26, U27, U28, U29	NPN DARLINGTON TRANSISTOR ARRAY, 50V, 500 mA	ULN2004A	8		
U31	MONO MULTI, DUAL	CD4098B	8	16	

UNUSED GATES
U17-11

UNUSED DRIVERS
U27-10
U28-10
U29-10

NOTES: (UNLESS OTHERWISE SPECIFIED)

1. DIODES ARE IN914.
2. RESISTORS ARE 1/4 W, 10%, RC07.
   RESISTORS RATED AT 1% ARE 1/8 W RN55D.
3. CAPACITORS VALUES GIVEN IN UF
   DECOUPLING CAPS ARE .1 UF CK06.

PROPRIETARY INFORMATION

DATA CONTAINED HEREIN IS THE PROPERTY OF CMC, INC., AND SHALL NOT BE USED OR DISCLOSED, EXCEPT FOR EVALUATION PURPOSES, WITHOUT THE EXPRESS WRITTEN CONSENT OF CMC INC.

A2

SIZE	DONE BY		REV
D		545D0180X	H
SCALE NONE		SHEET 2 of 4	

545D0180X

GRAPHTRONICS INC. 19

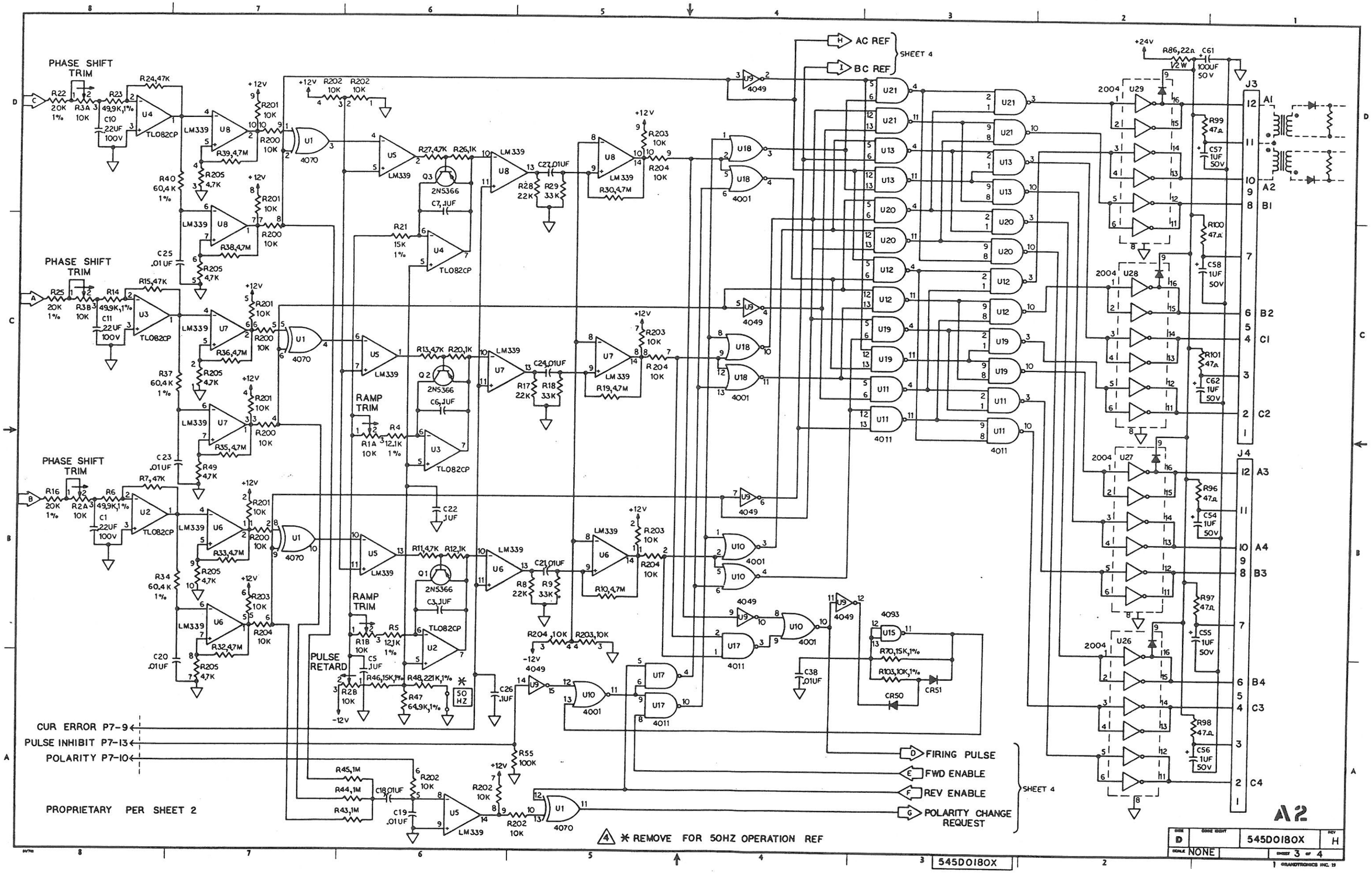
PHASE SHIFT TRIM
RAMP TRIM
PULSE RETARD
AC REF
BC REF
SHEET 4
CUR ERROR P7-9
PULSE INHIBIT P7-13
POLARITY P7-10
FIRING PULSE
FWD ENABLE
REV ENABLE
POLARITY CHANGE REQUEST
PROPRIETARY PER SHEET 2
* REMOVE FOR 50HZ OPERATION REF
A2
545D0180X
NONE
SHEET 3 OF 4

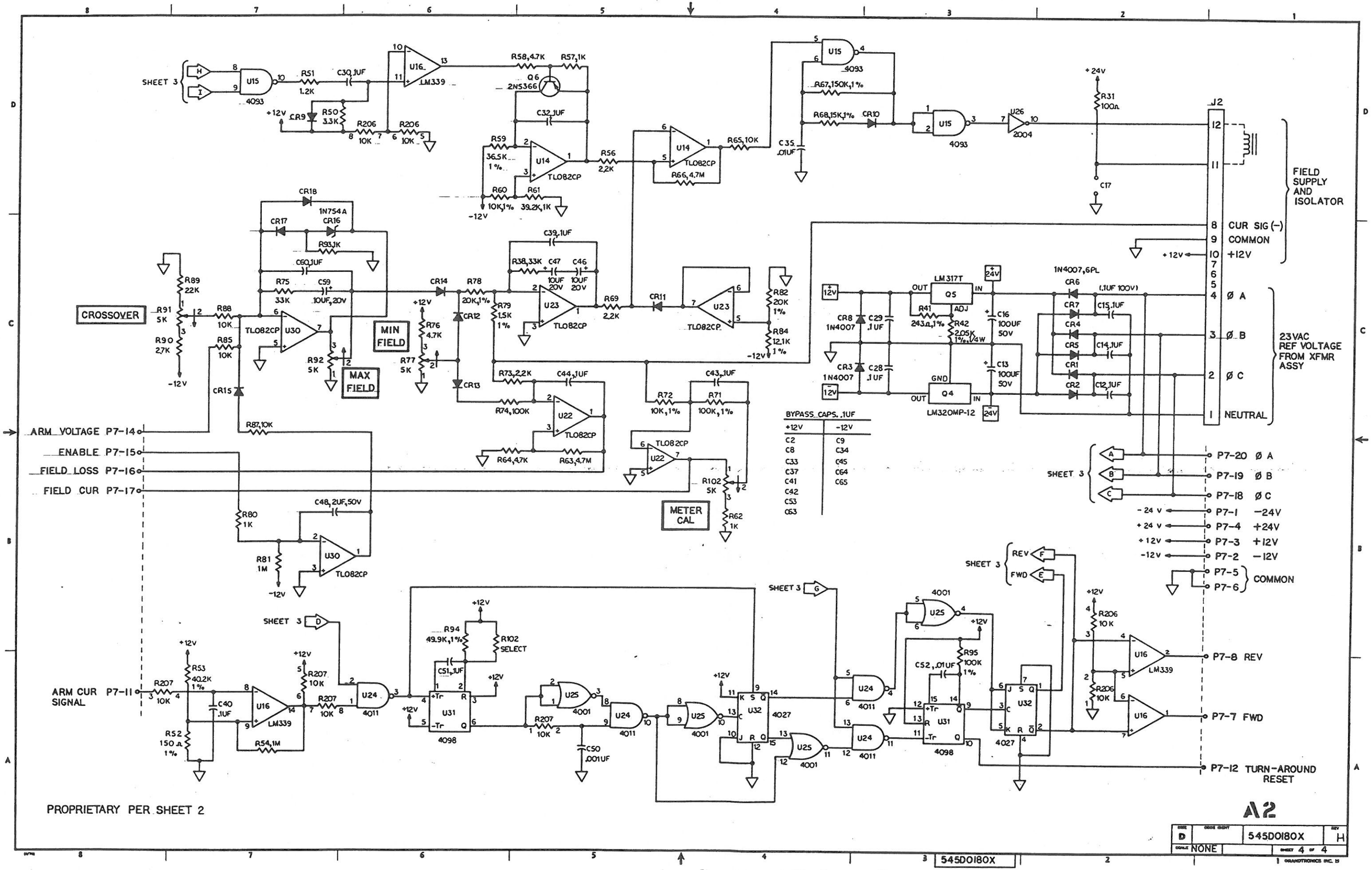
SHEET 3
U15
4093
R51
1.2K
C30 .1UF
U16
LM339
R58,4.7K
R57,1K
Q6
2N5366
C32 .1UF
R50
3.3K
CR9
+12V
R206
10K
R206
10K
R59
36.5K
1%
U14
TL082CP
R60
10K,1%
R61
39.2K,1K
-12V
R56
2.2K
U14
TL082CP
R66,4.7M
R65,10K
C35
.01UF
U15
4093
R67,150K,1%
R68,15K,1%
CR10
U15
4093
U26
2004
+24V
R31
100Ω
C17
J2
FIELD SUPPLY AND ISOLATOR
8 CUR SIG (-)
9 COMMON
10 +12V
4 Ø A
3 Ø B
2 Ø C
1 NEUTRAL
23VAC REF VOLTAGE FROM XFMR ASSY
CR18
1N754A
CR17
CR16
R93,1K
C60 .1UF
R89
22K
R75
33K
C59
10UF,20V
CROSSOVER
R91
5K
R90
2.7K
-12V
R88
10K
R85
10K
TL082CP
U30
R92
5K
MIN FIELD
MAX FIELD
CR15
R87,10K
CR14
R78
20K,1%
CR12
R79
1.5K
1%
C39 .1UF
R38,33K
C47
10UF 20V
C46
10UF 20V
U23
TL082CP
R69
2.2K
CR11
U23
TL082CP
R82
20K
1%
R84
12.1K
1%
-12V
R76
4.7K
R77
5K
CR13
R73,2.2K
C44 .1UF
R74,100K
U22
TL082CP
R64,4.7K
R63,4.7M
C43 .1UF
R72
10K,1%
R71
100K,1%
TL082CP
U22
R102
5K
R62
1K
METER CAL
LM317T
Q5
OUT
IN
ADJ
R41
243Ω,1%
R42
2.05K
1%,1/4W
GND
Q4
LM320MP-12
C16
100UF
50V
C13
100UF
50V
CR8
1N4007
C29
.1UF
CR3
1N4007
C28
.1UF
1N4007,6PL
CR6
.1UF 100V)
CR7
C15 .1UF
CR4
CR5
C14 .1UF
CR1
CR2
C12 .1UF
BYPASS CAPS .1UF
+12V
C2
C8
C33
C37
C41
C42
C53
C63
-12V
C9
C34
C45
C64
C65
ARM VOLTAGE P7-14
ENABLE P7-15
FIELD LOSS P7-16
FIELD CUR P7-17
R80
1K
C48,2UF,50V
R81
1M
U30
TL082CP
SHEET 3
A
B
C
P7-20 Ø A
P7-19 Ø B
P7-18 Ø C
-24 V
P7-1 -24V
+24 V
P7-4 +24V
+12V
P7-3 +12V
-12V
P7-2 -12V
P7-5
P7-6
COMMON
REV
FWD
SHEET 3
D
SHEET 3
G
R94
49.9K,1%
R102
SELECT
C51 .1UF
U31
4098
U25
4001
U24
4011
U32
4027
U25
4001
U24
4011
U25
4001
U24
4011
U25
4001
U24
4011
U25
4001
C52 .01UF
R95
100K
1%
U31
4098
U32
4027
R206
10K
U16
LM339
P7-8 REV
P7-7 FWD
P7-12 TURN-AROUND RESET
ARM CUR SIGNAL P7-11
R207
10K
R53
40.2K
1%
C40
.1UF
U16
LM339
R52
150Ω
1%
R54,1M
R207
10K
R207
10K
C50
.001UF
PROPRIETARY PER SHEET 2
A2
D
545D0180X
H
NONE
SHEET 4 OF 4
545D0180X

REVISIONS			
LTR	DESCRIPTION	DATE	APPROVED
A	RELEASE FOR PRODUCTION	1-23-81 IEC	
B	REV PER PCB ARTWORK REV B	6/5/81	
C	REVISED ECO #451	9-9-82 IEC	
C1	REVISED ARTWORK- TO ACCEPT NEW STYLE T1 - T2	2-2-84	
D	INCREASE LENGTH OF GRAY & YELLOW WIRES FROM 3½" TO 5".	8-31-84	
E	ADDED R9A AND VALUE TABLE	4-17-85	

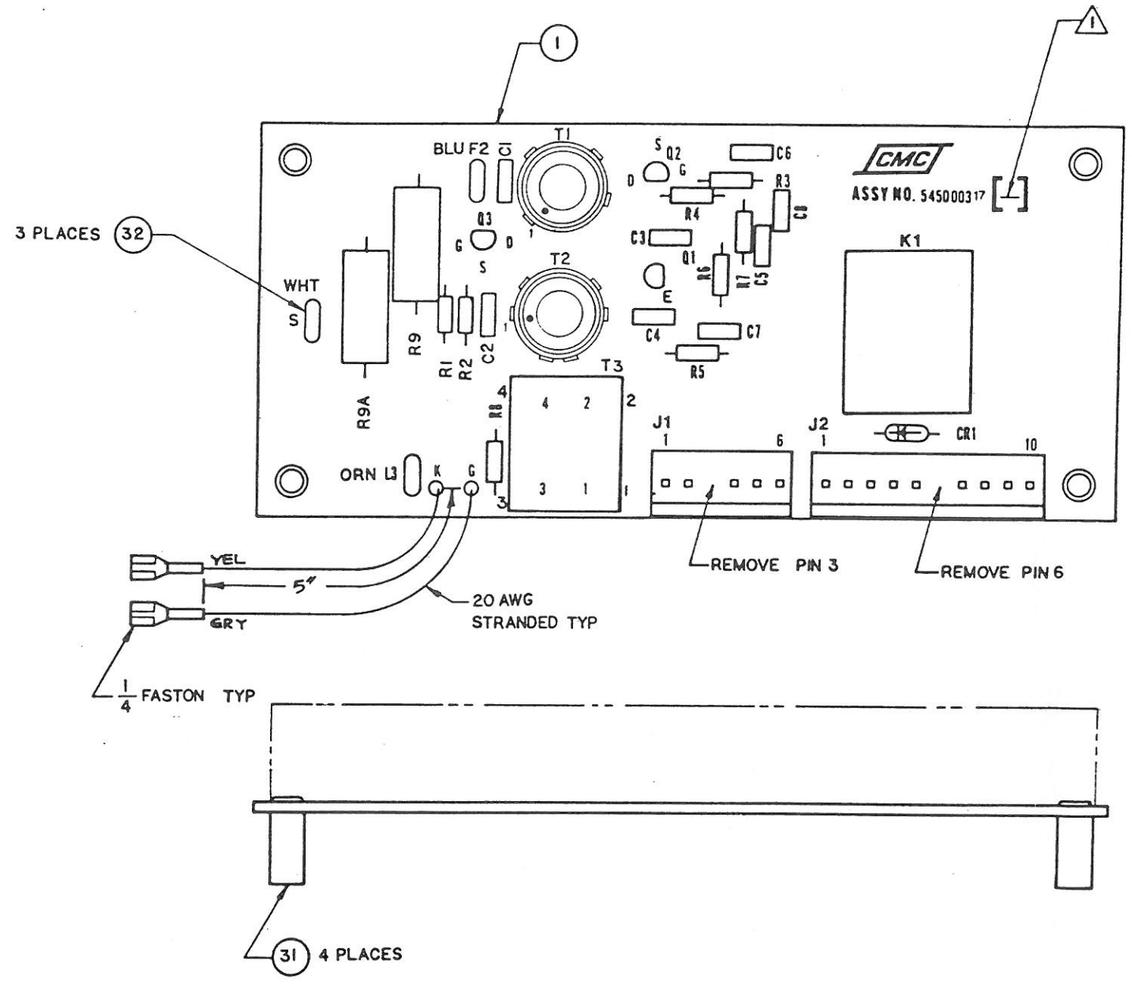

1 RUBBER STAMP ISSUE LETTER AND PART NUMBER.

P/N 545D00317

A3

PARTS LIST

9513

CLEVELAND MACHINE CONTROLS, INC. WESTERN OPERATIONS

PRINTED CIRCUIT BOARD ASSY
FIELD ISOLATOR & INTERLOCK

SEE PARTS LIST 545D0030X

545D0030X E

2 = 1 9513 1 OF 2

545D0030X

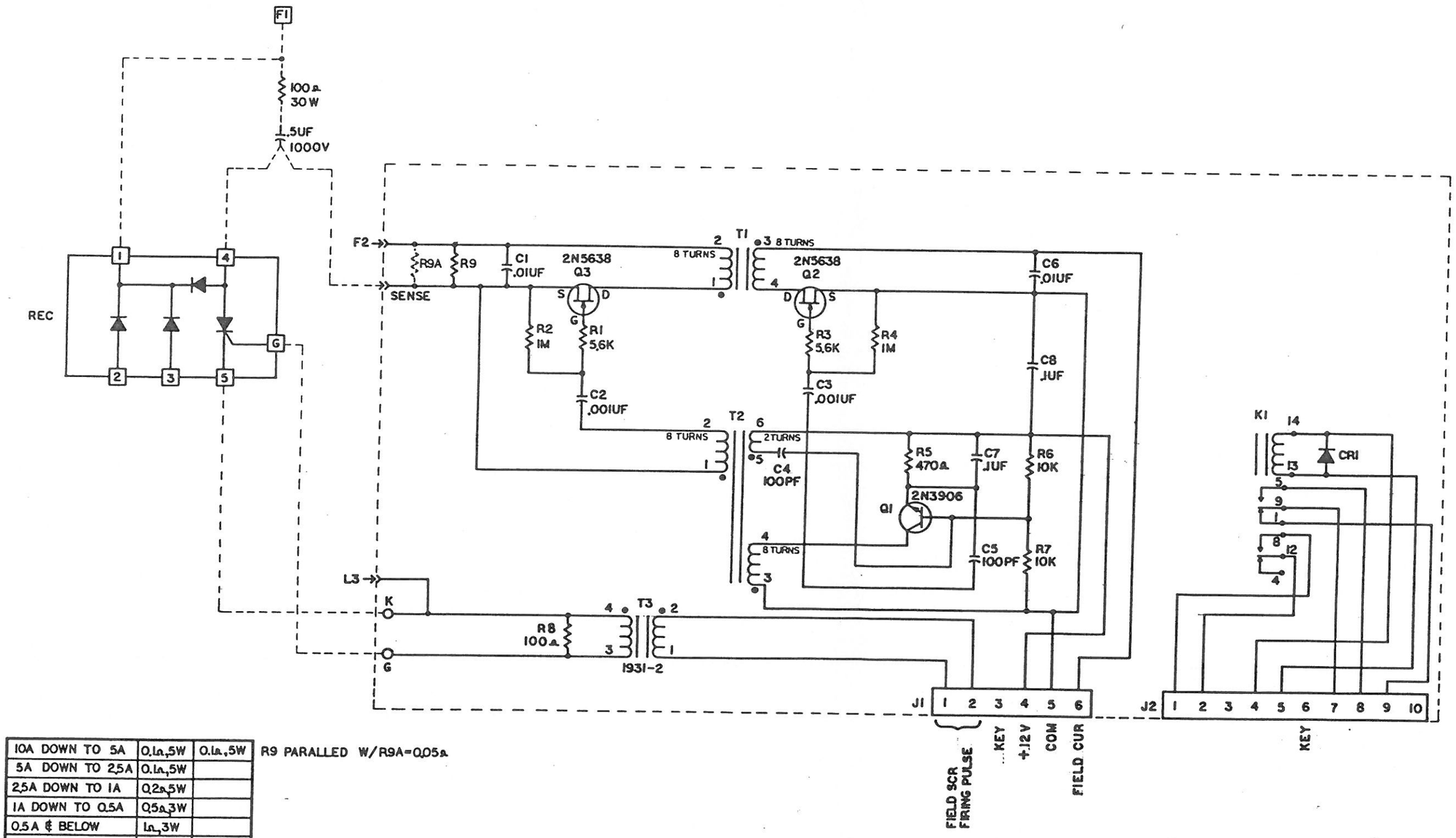

10A DOWN TO 5A	0.1Ω,5W	0.1Ω,5W
5A DOWN TO 2.5A	0.1Ω,5W	
2.5A DOWN TO 1A	0.2Ω,5W	
1A DOWN TO 0.5A	0.5Ω,3W	
0.5A & BELOW	1Ω,3W	
AMPS	R9	R9A
MOTOR FIELD CURRENT RATING		

R9 PARALLED W/R9A=0.05Ω

D		54500030X	E
SCALE NONE	9513	SHEET 2 OF 2	

54500030X

REVISIONS			
LTR	DESCRIPTION	DATE	APPROVED
A	RELEASE	2-5-87	BO
B	R1,R2,R3 WAS 100W, ECO # W716.	3/26/87	B.O

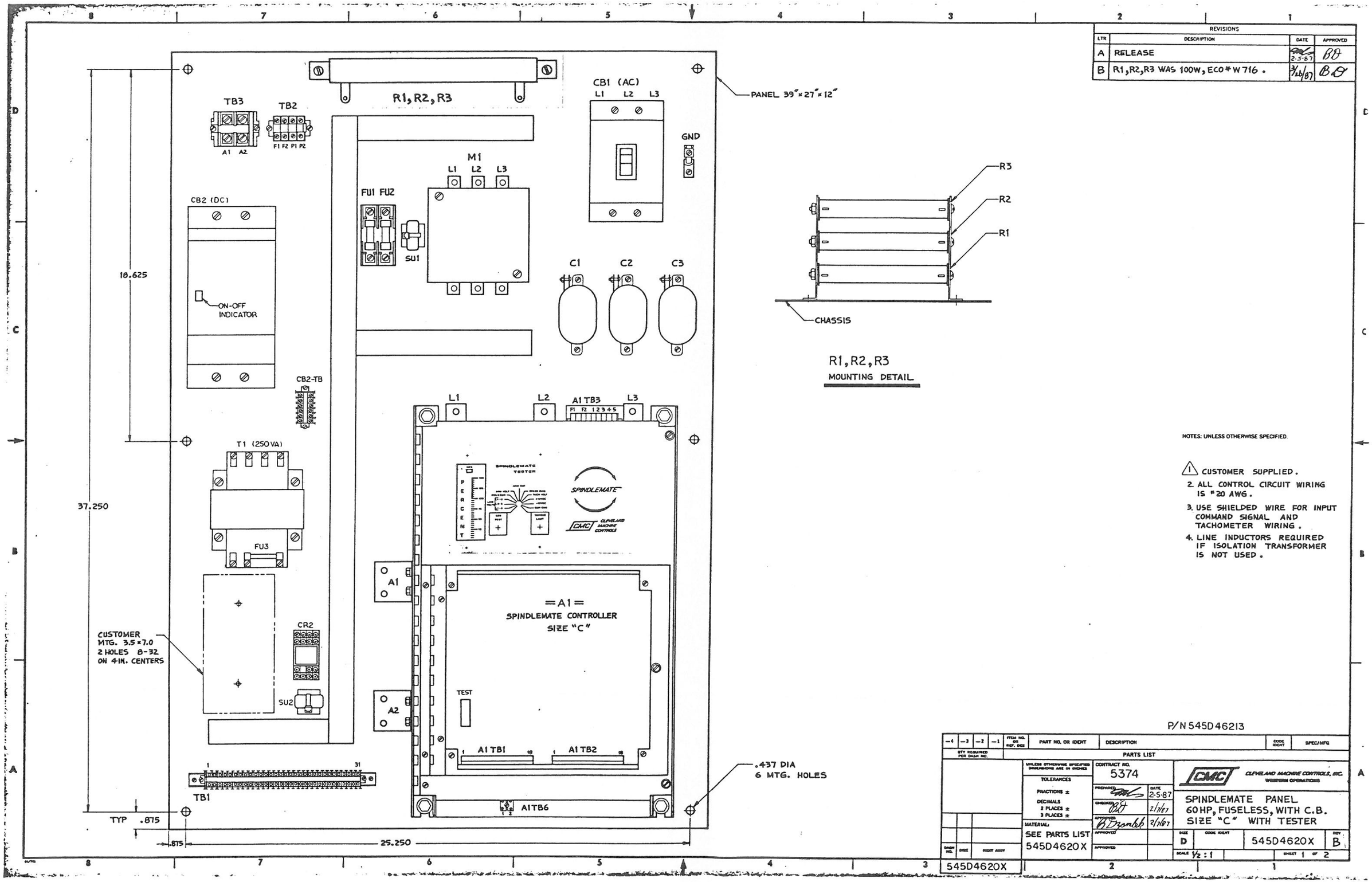

NOTES: UNLESS OTHERWISE SPECIFIED.

1. CUSTOMER SUPPLIED.
2. ALL CONTROL CIRCUIT WIRING IS #20 AWG.
3. USE SHIELDED WIRE FOR INPUT COMMAND SIGNAL AND TACHOMETER WIRING.
4. LINE INDUCTORS REQUIRED IF ISOLATION TRANSFORMER IS NOT USED.

P/N 545D46213

-4	-3	-2	-1	ITEM NO. OR REF. DES	PART NO. OR IDENT	DESCRIPTION	CODE IDENT	SPEC/MFG
QTY REQUIRED PER DASH NO.						PARTS LIST		

UNLESS OTHERWISE SPECIFIED DIMENSIONS ARE IN INCHES
TOLERANCES
FRACTIONS ±
DECIMALS
2 PLACES ±
3 PLACES ±
MATERIAL: SEE PARTS LIST
545D4620X

CONTRACT NO. 5374
PREPARED — DATE 2-5-87
CHECKED — 2/16/87
APPROVED — 2/16/87
APPROVED
APPROVED

CMC CLEVELAND MACHINE CONTROLS, INC. WESTERN OPERATIONS

SPINDLEMATE PANEL
60HP, FUSELESS, WITH C.B.
SIZE "C" WITH TESTER

DASH NO.	SIZE	RIGHT ASSY	SIZE	CODE IDENT		DEV
545D4620X			D		545D4620X	B

SCALE 1/2 : 1 SHEET 1 OF 2

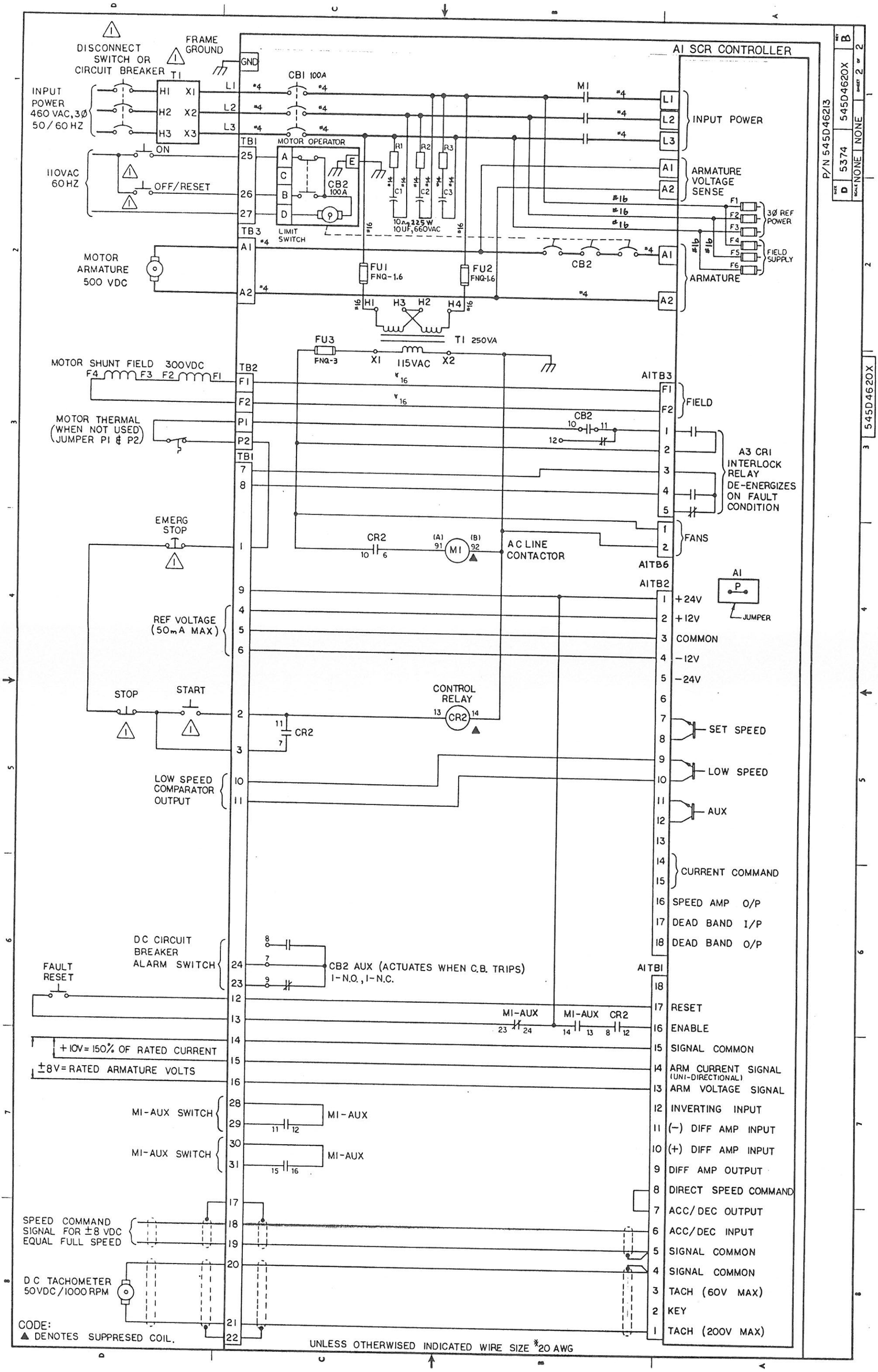
A1 SCR CONTROLLER
DISCONNECT SWITCH OR CIRCUIT BREAKER
FRAME GROUND
GND
T1
H1 X1
H2 X2
H3 X3
INPUT POWER 460 VAC, 3Ø 50/60 HZ
L1
L2
L3
CB1 100A
M1
INPUT POWER
TB1
25
26
27
ON
OFF/RESET
110VAC 60HZ
MOTOR OPERATOR
A
C
B
D
E
CB2 100A
LIMIT SWITCH
R1
R2
R3
C1
C2
C3
10Ω, 225W 10UF, 660VAC
ARMATURE VOLTAGE SENSE
A1
A2
3Ø REF POWER
FIELD SUPPLY
ARMATURE
TB3
MOTOR ARMATURE 500 VDC
FU1 FNQ-1.6
FU2 FNQ-1.6
CB2
H1 H3 H2 H4
T1 250VA
FU3 FNQ-3
X1 115VAC X2
MOTOR SHUNT FIELD 300VDC
F4 F3 F2 F1
TB2
F1
F2
P1
P2
AITB3
FIELD
MOTOR THERMAL (WHEN NOT USED JUMPER P1 & P2)
A3 CR1 INTERLOCK RELAY DE-ENERGIZES ON FAULT CONDITION
EMERG STOP
CR2
M1
AC LINE CONTACTOR
FANS
AITB6
AITB2
A1
JUMPER
+24V
+12V
COMMON
-12V
-24V
REF VOLTAGE (50mA MAX)
STOP
START
CONTROL RELAY
CR2
SET SPEED
LOW SPEED
LOW SPEED COMPARATOR OUTPUT
AUX
CURRENT COMMAND
SPEED AMP O/P
DEAD BAND I/P
DEAD BAND O/P
DC CIRCUIT BREAKER ALARM SWITCH
CB2 AUX (ACTUATES WHEN C.B. TRIPS) 1-N.O., 1-N.C.
AITB1
FAULT RESET
RESET
ENABLE
M1-AUX
SIGNAL COMMON
+10V = 150% OF RATED CURRENT
±8V = RATED ARMATURE VOLTS
ARM CURRENT SIGNAL (UNI-DIRECTIONAL)
ARM VOLTAGE SIGNAL
M1-AUX SWITCH
INVERTING INPUT
(-) DIFF AMP INPUT
(+) DIFF AMP INPUT
DIFF AMP OUTPUT
DIRECT SPEED COMMAND
ACC/DEC OUTPUT
ACC/DEC INPUT
SPEED COMMAND SIGNAL FOR ±8 VDC EQUAL FULL SPEED
SIGNAL COMMON
DC TACHOMETER 50VDC/1000 RPM
TACH (60V MAX)
KEY
TACH (200V MAX)
CODE:
▲ DENOTES SUPPRESED COIL.
UNLESS OTHERWISED INDICATED WIRE SIZE #20 AWG
P/N 545D46213
545D4620X
5374
NONE
545D4620X

INSTALLATION AND SERVICE INSTRUCTIONS

FOR SERIES LA – LE PUMPS

GENERAL INFORMATION
Pumping Principle ..... Page 1
Seal ..... Page 1

INSTALLATION
Selection ..... Page 1
Method of Drive ..... Page 2
Strainer Protection ..... Page 2

SERVICE
Disassembly of Seal ..... Page 3
Disassembly of Pump ..... Page 3
Inspection ..... Page 3
Assembly of Pump ..... Page 3
Pump Performance Test ..... Page 3
Assembly of Seal ..... Page 3
Trouble-Shooting Hints ..... Page 4

REPLACEMENT PARTS LISTS
Relief Valve Detail Model LEV ..... Page 6
Model LA ..... Page 7
Model 2LA ..... Page 8
Model LE ..... Page 9
Model 2LE ..... Page 10

Tuthill Corporation ®

Tuthill Pump Division

12500 South Pulaski Road
Chicago, Illinois 60658
312 389-2500
Telex #6974251
3781847

INSTALLATION AND SERVICE INSTRUCTIONS

FOR SERIES LA – LE PUMPS

GENERAL DESCRIPTION

The Tuthill Series LA-LE is a compact highly efficient, positive displacement, rotary internal gear type pump with mechanical seal. Built in five sizes, it provides capacities from 20 to 360 gallons per hour and pressures up to 500 psi and is available with 2-bolt flange in the LA Series and 3-bolt flange in the LE Series. Optional mounting feet are available. It is multi-directional in rotation and designed for direct drive at standard motor speeds, with modifications available for indirect drive.

PUMPING PRINCIPLE

These pumps employ the Tuthill internal gear principle which is based upon the use of a rotor, idler gear and a crescent-shaped partition that is cast integrally with the cover. (See accompanying figure.) Thus, only two moving parts comprise this efficient pumping element. Power is applied to the rotor and transmitted to the idler gear with which it meshes. The space between the outside diameter of the idler and the inside diameter of the rotor is sealed by the crescent. When the pump is started, there is an increase in volume as the teeth come out of mesh. This creates a partial vacuum, drawing the liquid into the pump through the suction port. The liquid fills the spaces between the teeth of the idler and rotor and is carried past the crescent partition to the pressure side of the pump. When the teeth mesh on the pressure side, the liquid is forced from the spaces and out through the discharge port.

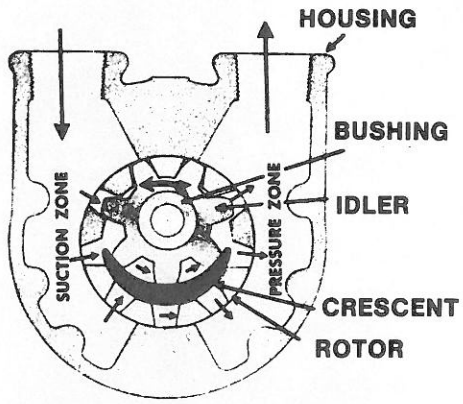

COUNTERCLOCKWISE ROTATION

SEAL

The seal is a device to prevent leakage between the stationary pump body and rotating drive shaft. A rotating lapped surface is attached to the shaft by an elastomer bellows. This rotating face is spring loaded to rub against a stationary lapped surface in the housing plug bushing. The clearance between these two surfaces is so minute that resistance to flow is great enough that fluid will not leak out and air will not be drawn in.

SELECTION

The Series LA and LE pumps are designed for working pressures up to 500 psi and are required to develop 25" mercury vacuum at 0 psi on factory test. While these pumps will develop as high as 27" of vacuum, it is sound engineering to avoid extreme vacuum whenever possible. Select pipe size to reduce line friction loss to a minimum. On transfer service, place pump as close to supply tank as conditions will permit, and eliminate the use of foot valves or check valves in the suction line whenever possible. The LA and LE pumps are self priming and particularly suited to handle liquids of 35 SSU to 1000 SSU viscosity. Higher viscosities can be handled at reduced speeds. It is important that the piping used in connecting the pump be clean and free of chips or scales.

Consult us in selecting the proper pump and size of motor, giving us all the following information:

1. Capacity required
2. Maximum and minimum liquid temperature when entering the pump.
3. The viscosity at the minimum temperature.
4. Total length of suction pipe and discharge pipe, including pipe sizes.
5. Suction lift and height to which the pump must force the liquid.

METHOD OF DRIVING

Direct motor drive through a flexible coupling is the most satisfactory method.

NOTE: **LA and LE pumps can be driven in either direction of rotation.** The seal chamber communicates with the neutral zone and therefore the seal is subjected to one-half of the discharge pressure.

Viewing the pump from the shaft end, the inlet port is on the right-hand side for clockwise rotation, on the left-hand side for counter-clockwise rotation.

Pumps with built-in relief valves are uni-directional. Therefore, rotation, clockwise or counter-clockwise, facing the shaft end, must be specified.

1. All pump and motor units are properly aligned at the factory. However, misalignment may occur due to abuse or conditions beyond our control.
2. Pipe strains often force the pump and motor shafts out of alignment. See that all piping leading to the pump is properly supported by wall brackets. Do not expect the pump to act as a pipe support.
3. Provide for proper expansion of pipes when handling hot liquid.
4. Series L pumps are not designed to take end thrust toward the cover. Provide sufficient clearance, 1/16" to 1/8" between coupling halves with shafts in closest operating position, to allow for end wear in the driving shaft.
5. Never align the pump and motor supplied with pin type coupling without first removing the pins.
6. Never depend upon sight or feel for freeness in aligning a pump.

LA and LE pumps should be filled with oil at installation and should never be allowed to run dry.

STRAINER PROTECTION

Strainers are used to remove contaminating particles from the hydraulic system and every Tuthill pump should be protected from these particles by a strainer in the suction line.

1. Strainer size and mesh of screen is determined by rate of flow and viscosity of fluid. Consult strainer manufacturer for recommendations.
2. Never use a strainer with a built-in automatic by-pass on the suction line set to open under 30" Hg. vacuum.
3. Install strainer according to arrows or flow designation.
4. Have strainer accessible for servicing.
5. Use a duplex type where shutdown during service is not permitted.
6. Provide a vacuum gage in the suction line for determining when the strainer requires cleaning.
7. Make certain strainer baskets are properly reinforced so as not to collapse under 30" Hg. vacuum.

Series LA-LE pumps should always be installed with both ports pointing upward to insure proper priming. If it becomes necessary to install the pump with the ports pointed to the side, then the top port should be the suction port. When the pump is installed above the supply tank, an inverted "U" bend should be incorporated in the suction line close to the pump to trap liquid in the pump for priming.

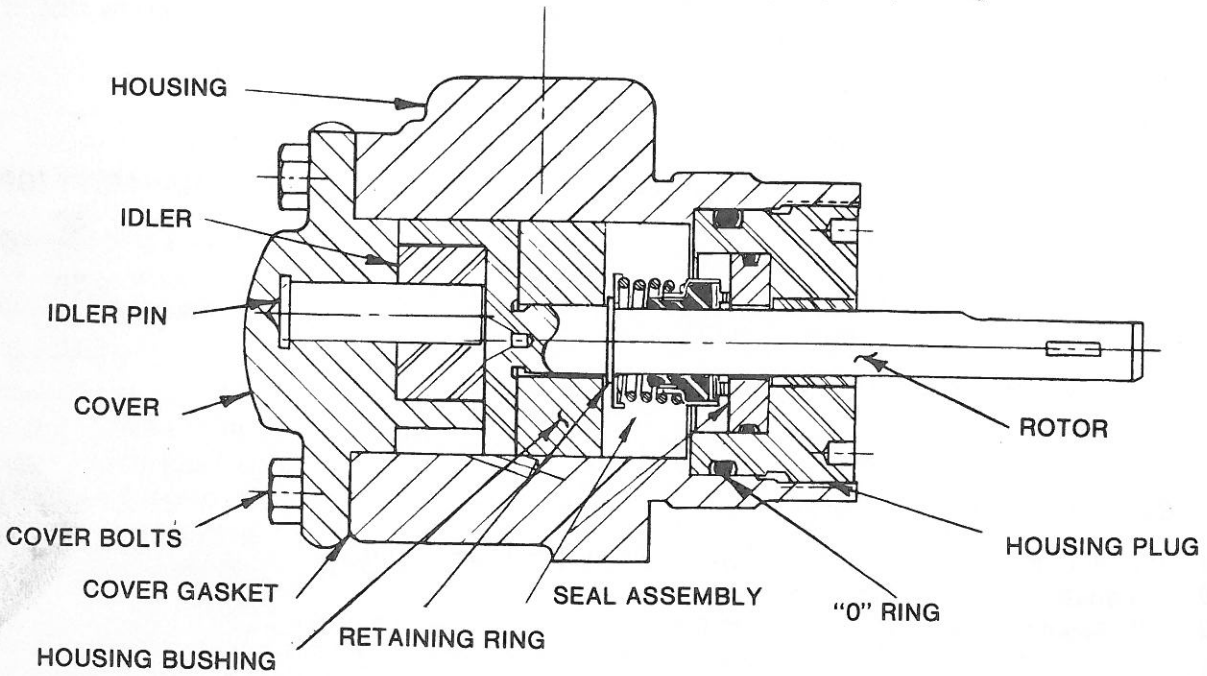

DISASSEMBLY OF SEAL

The seal assembly of the LA and LE pump may be changed without dis-assembly of the rest of the pump.

1. Place the pump in vise, shaft facing up, so that one jaw grips across the two ports. Do not tighten excessively as pump housing may be distorted.
2. Inspect shaft at keyway, flat or drive tang. Any burrs will interfere with removal of housing plug bearing assembly.
3. Remove housing plug with face type spanner wrench (available from Tuthill as part No. OL506).
4. Remove the seal from shaft. The rubber boot will be bonded to the shaft, so it is necessary to push down on the seal to break this bond. Grasp the metal outer shell with any suitable device and pull the seal assembly upwards. The spring and washer should also be removed.
5. The 30LA through 1LA and 30LE through 1LE pump assemblies have a snap ring on the shaft to back up the seal assembly. Do not remove this snap ring unless you are completely disassembling the pump. The 2LA and 2LE pumps do not have a snap ring. A step on the shaft is used as the seal back up.
6. Remove stationary seal face from housing plug by pressing out from opposite side.
7. If damaged, remove the O-ring from O.D. of housing plug.

DISASSEMBLY OF PUMP

Seal assembly must be removed before disassembly of pump. Also remove snap ring on shaft on 30LA through 1LA and 30LE through 1LE.

Mark cover and body of the pump for proper reassembly. Remove cap screws, cover, idler and rotor from housing.

INSPECTION

Check pump housing, rotor, idler gear, idler pin and crescent for wear, chipped or broken teeth.

Housing bore and rotor O.D. may be checked for wear by positioning rotor in the housing and check for clearance in the bearing. The shaft must turn freely without any detectable side play. Any side play will require replacement of the housing, rotor or both. If both housing and rotor require replacing, it is economically advisable to replace the pump.

ASSEMBLY OF PUMP

The following must be carefully followed when pump is reassembled:

1. Clean all parts thoroughly using great care to eliminate all dirt.
2. Install rotor in pump body.
3. Apply gasket to cover. Use new gasket if old one is damaged.
4. Place idler gear on pin in cover assembly.
5. Place cover assembly with gear on pump. (Align matching marks for proper location.)
6. Install cover cap screws. Pull down gradually and alternate from a screw on one side to one on the opposite side.
7. Install snap ring on shaft.

PUMP PERFORMANCE TEST

PUMP SIZE	SPEED (RPM)	PRESSURE(PSI)	CAPACITY (GPM)
30L	1750	100	.30
00L	1750	100	.75
0L	1750	100	1.50
1L	1750	100	2.70
2L	1750	100	5.70

Performance data based on pumping a liquid of 200 SSU viscosity.

ASSEMBLY OF SEAL

1. Clean all parts thoroughly using great care to eliminate all dirt.
2. Oil shaft with suitable lubricating oil.
3. Oil inside of new rotary seal assembly.

For standard full length shafts with flat and/or keyway:

a. Place rotary seal assembly on pump shaft.

b. Push seal down with your fingers to a position approximately half way down shaft.

For Mod. "A" tang shafts:

a. Use plastic seal assembly tapered sleeve.
(Available from Tuthill as part No. 1LPF531-7010.)

b. Oil seal assembly sleeve.

c. Place rotary seal assembly on sleeve. Tapered end of sleeve fits into spring end of assembly.

d. Place slotted end of sleeve on bench. Press down on carbon face of seal with your fingers and slide seal about mid-point on sleeve.

e. Place slotted end of tool over tang on pump shaft. Line up outside diameters of sleeve and shaft by eye.

f. Push seal down with your fingers so that it passes from the assembly sleeve to a position half way down the shaft.

4. Press stationary face into housing plug. Lapped surface must be up. Protect this lapped surface by covering it with a piece of paper when pressing down on face. Use your fingers for this operation.
5. Place new 0-ring on O.D. of housing plug, if required, and lubricate with oil.
6. Lubricate carbon face liberally with lube oil.
7. Reassemble housing plug into position over the pump shaft. Do not nick seal face by hitting pump shaft. Tighten the housing plug with spanner wrench (OL506). Rotating seal will automatically be positioned by this operation.
8. If pump is equipped with ball bearing ("K" Model only), press bearing on to shaft. Press on bearing inner race with suitable sleeve. Do not hammer into position or press on bearing outer race.
9. Check pump for free rotation by turning shaft with suitable wrench. There will be a definite resistance to turning because of the seal load. The pump must turn freely without binding.

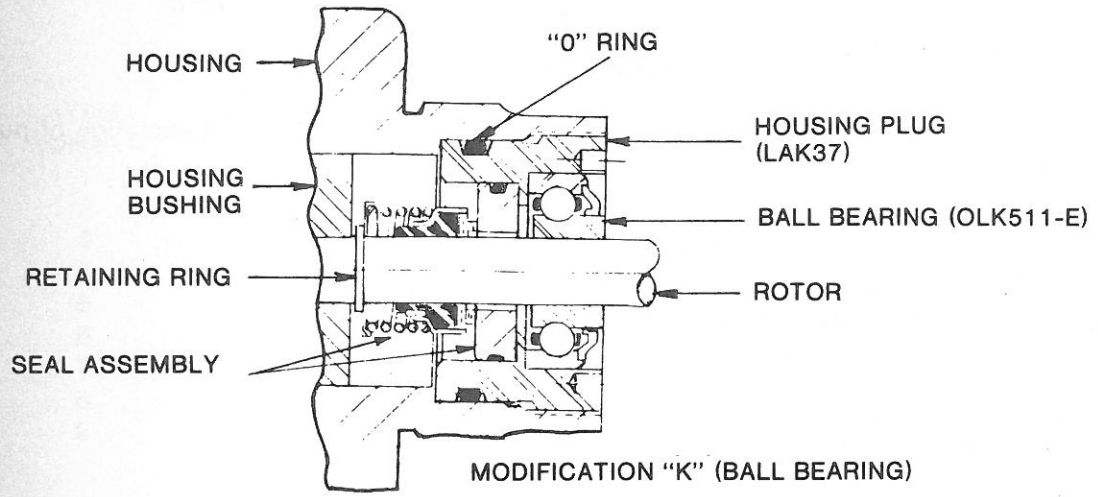

MODIFICATION "K" (BALL BEARING)

TROUBLE-SHOOTING HINTS

WHAT TO LOOK FOR WHEN

NO OIL IS DELIVERED.

a. Suction lift too high for vapor pressures of liquid pumped. While Tuthill pumps will develop as high as 27 inches of vacuum, it is good engineering practice to reduce the vacuum to a minimum.

b. Bad leaks in suction line or port passages can be detected by submerging pressure line from discharge side of pump into a pail of oil, where the air will be seen in the form of bubbles.

c. Pump shaft not rotating.
Coupling defective - tongue and groove or gear not engaged.

CAPACITY IS TOO LOW.

a. Suction lift too high.
b. Air leaks in suction line.
c. Suction line too small.

Can be detected by installing a vacuum gage directly at the pump suction. The maximum vacuum at the pump suction should never exceed 15 inches of mercury. It is necessary to keep below 15 inches, not because of the inability of the pump to handle a higher vacuum, but primarily because of the vaporization that is liable to take place at a higher vacuum. Vaporization caused by higher vacuums will generally result in capacity drop-off.

d. Pump speed too slow.
e. Strainer too small or obstructed.
f. Suction pipe or port not immersed in the liquid deep enough.
g. Piping improperly installed, permitting air pocket to form in pump.
h. Increased clearances or wear in the pump will sometimes cause the pump to deliver an insufficient supply of liquid.

PUMP WORKS SPASMODICALLY.

a. Leaky suction lines.
b. Suction lift too high.
c. Air or vapor in liquid.
d. Coupling slipping on pump shaft.

PUMP WASTES POWER.

a. Pressures too high.
b. Liquid more viscous than desired.
c. Suction or discharge lines obstructed.
d. Mechanical defects.

End thrust on pump shaft. (Tuthill pumps are not designed to take end thrust toward the pump cover and extreme care must be taken to prevent thrust in this direction.)
Driving shaft and pump shaft misaligned.
The pump may be binding due to insufficient end clearance.
Pump shaft bent.
Misalignment within pump due to strains built up by bad piping or installation of pump into equipment.

PUMP IS NOISY.

a. Machine or part of it is acting as a sounding board.
b. Misalignment or bad design of coupling.
c. Coupling set up too close to pump.
d. Vibration of pump.

Bent Shaft
Worn pump.
Inferior workmanship.

e. Air leaks into suction side of pump.
f. Suction lift so high that vapor forms within liquid.

PUMP LEAKS.

a. Cover bolts need tightening, or cover gasket is defective.
b. See seal under service instructions.

HANDLE WITH CARE.

If it becomes necessary to remove pump from your equipment to return to the manufacturer, plugs should be inserted in the ports to prevent foreign material from getting into the moving parts. Tuthill pumps are precision-built and should be given every reasonable care.

TYPICAL RELIEF VALVE ASSEMBLY
MODEL "LEV"

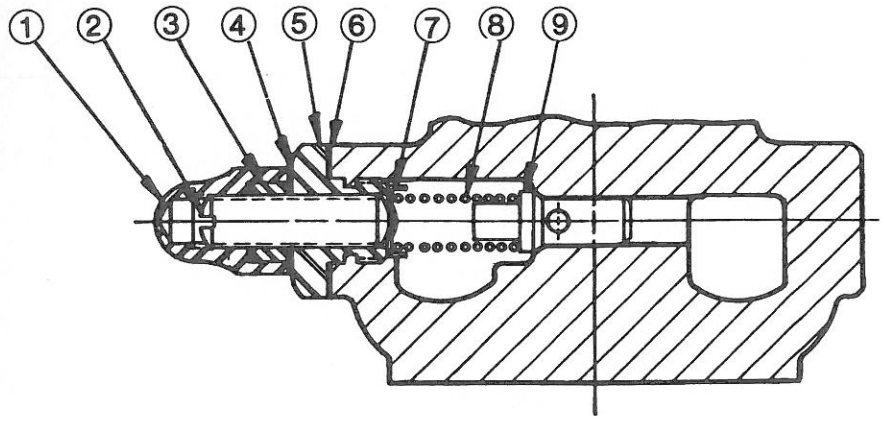

REPLACEMENT PARTS LIST FOR LEV VALVE ASSEMBLY

ITEM NUMBER	PART NUMBER	PART DESCRIPTION
1	30LE56	Valve Cap Cover
2	P103-11	5/16-18 NC2 X 1-3/8" Long Set Screw
3	30LE528	Nut
4	30LE64-A	Valve Cap Cover Gasket
5	OLWV56	Valve Cap
6	30F64 X 201	Valve Cap Gasket
7	30EN92	Spring Retainer
8	* *	Spring (See Chart Below)
9	OLV58 X 201	Plunger

* * Relief Valve Springs
Standard Relief Valve setting is 55 psi unless otherwise requested.

PUMP SIZE	30F80-X min-max	OC62 X201 min-max	OC62 X299 min-max	OLWV63 min-max	OLWVH63 min-max	OLPV63 min-max	OLV63X min-max	OLVH63 X478 min-max
30	15-30	30-35	35-55	55-120	60-170	200-375	376-600	600-850
00	---	25-35	35-55	55-120	60-170	200-375	376-600	600-850
0	---	25-35	35-55	55-120	60-170	200-375	376-600	600-850
1	---	25-35	35-55	55-120	60-170	200-375	376-600	600-850
2	---	---	35-55	55-120	60-170	200-375	376-600	600-850

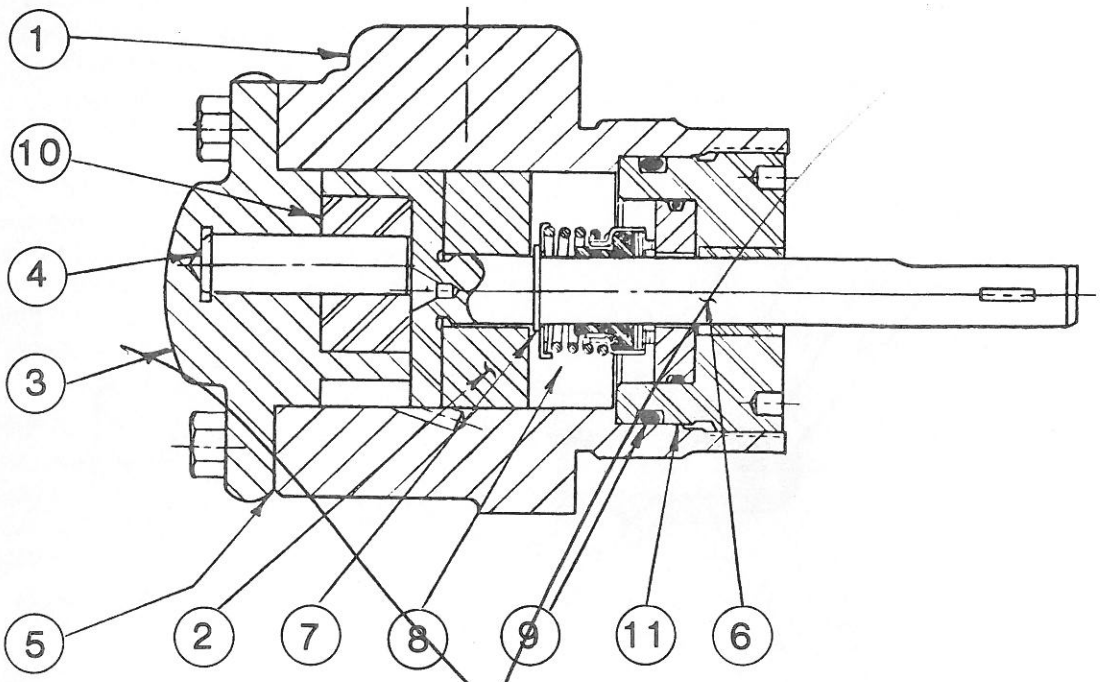

SERIES LA PUMP PARTS LIST

ITEM NO.	PART DESCRIPTION ALL MODELS	SIZE 30 PART NO.	SIZE 00 PART NO.	SIZE 0 PART NO.	SIZE 1 PART NO.
1	Housing	30LA20	0LA20	0LA20	1LA20
2	Housing Bushing	30LA71	1LA71	1LA71	1LA71
	Cover Assembly	30L6	00L6	0L6	1L6
3	Cover	30L35	00L35	0L35	1L35
4	Idler Pin	30L31	1M31	1M31	1L31
5	Cover Gasket	30B34	0B34	0B34	0B34
6	Rotor	30LA24	00LA24	0LA24	1LA24
7	Retaining Ring	P206-34	P206-34	P206-34	P206-34
8	Seal Assy (Buna N)	1LA9	1LA9	1LA9	1LA9
9	O-Ring (Buna N)	P701-34-37	P701-34-37	P701-34-37	P701-34-37
	MODEL LA				
10	Idler Gear	30L32	00B32-1	0B32-1	1L32-1
11	Housing Plug Assy	30LA11	1LA11	1LA11	1LA11
	MODEL LAH				
10	Idler Gear	30L32	00B32	0B32	1L32
11	Housing Plug Assy	30LA11	1LA11	1LA11	1LA11
	MODEL LAK				
10	Idler Gear	30L32	00B32-1	0B32-1	1L32-1
11	Housing Plug	30LAK37	1LAK37	1LAK37	1LAK37
	*Ball Bearing	0LK511-E	0LK511-E	0LK511-E	0LK511-E
	MODEL LAT				
10	Idler Gear	30L32	00B32	0B32	1L32
11	Housing Plug	30LAK37	1LAK37	1LAK37	1LAK37
	*Ball Bearing	0LK511-E	0LK511-E	0LK511-E	0LK511-E

*See "K" seal construction on page 4.

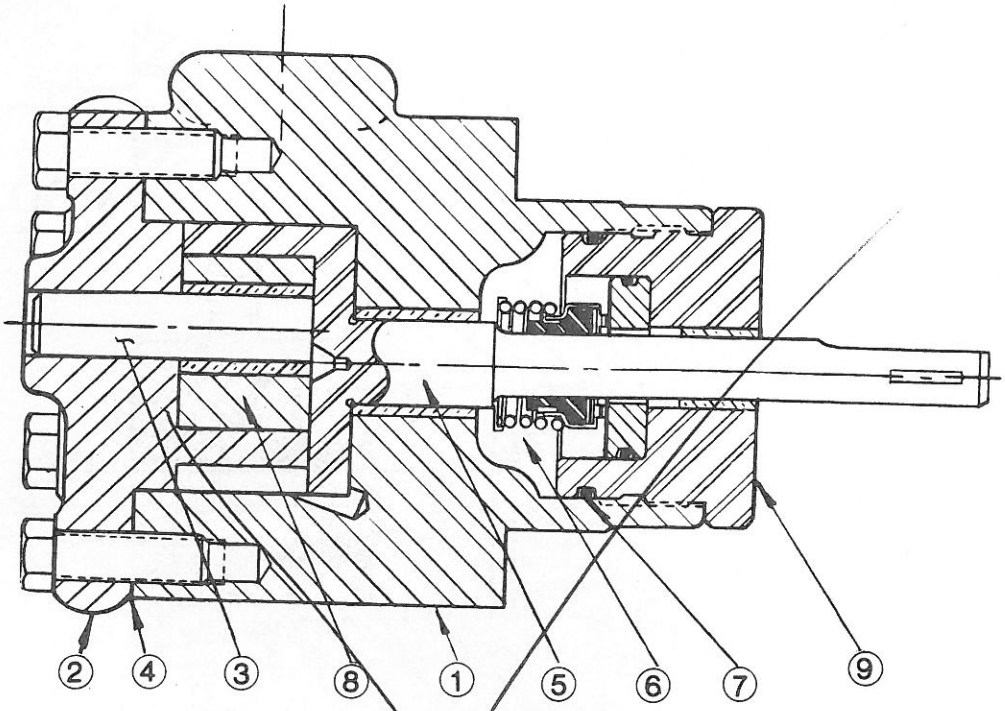

SERIES 2LA PUMP PARTS LIST

ITEM NO.	PART DESCRIPTION ALL MODELS	SIZE 2 PART NO.
1	Housing Assembly	2LA2
	Cover Assembly	2L6
2	Cover	2L35
3	Idler Pin	2L31
4	Cover Gasket	2RFD34
5	Rotor	2LA24
6	Seal Assy (Buna N)	1LA9
7	O-Ring (Buna N)	P701-34-37
	MODEL LA	
8	Idler Gear	2L32-1
9	Housing Plug Assy	2LA11
	MODEL LAH	
8	Idler Gear	2L5
9	Housing Plug Assy	2LA11
	MODEL LAK	
8	Idler Gear	2L32-1
9	Housing Plug	2LAK37
	*Ball Bearing	0LK511-E
	MODEL LAT	
8	Idler Gear	2L5
9	Housing Plug	2LAK37
	*Ball Bearing	0LK511-E

*See "K" seal construction on page 4.

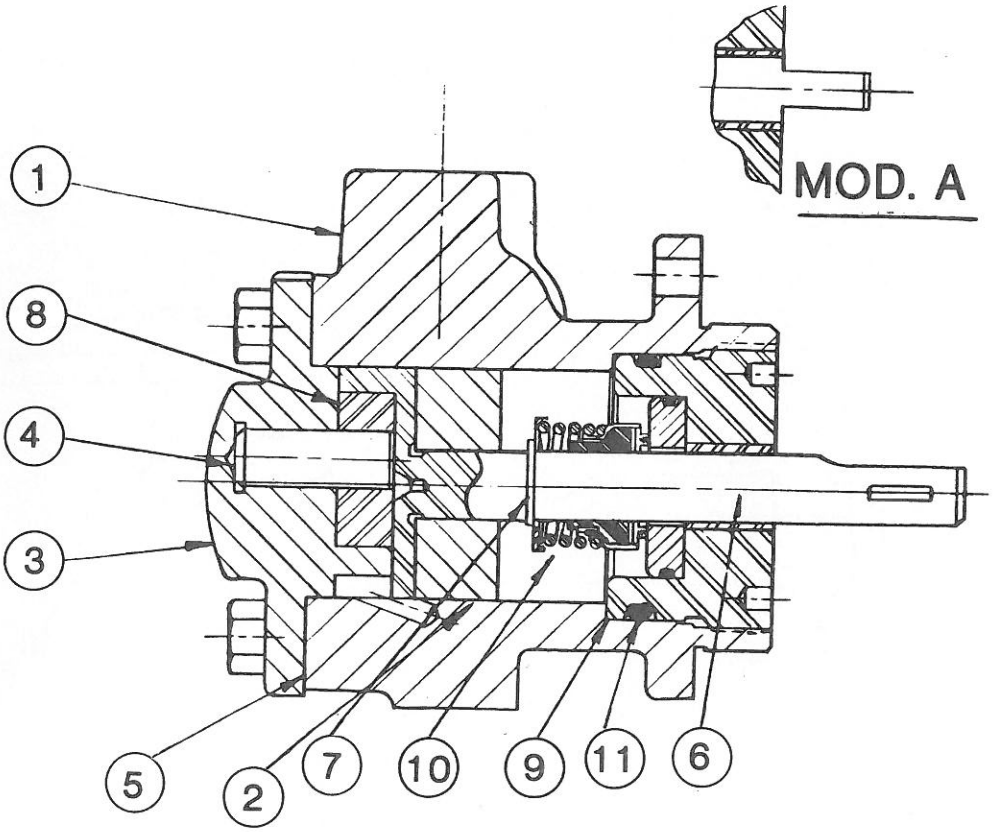

SERIES LE-LEV PUMP PARTS LIST

ITEM NO.	PART DESCRIPTION	SIZE 30 PART NO.	SIZE 00 PART NO.	SIZE 0 PART NO.	SIZE 1 PART NO.
1	Housing (LE)	30LE20	0LE20	0LE20	1LE20
2	Housing Bushing	30LA71	1LA71	1LA71	1LA71
1	Housing (LEV)*	30LEV20	0LEV20	0LEV20	1LEV20
2	Housing Bushing	30LA71	1LA71	1LA71	1LA71
	Cover Assembly	30L6	00L6	0L6	1L6
3	Cover	30L35	00L35	0L35	1L35
4	Idler Pin	30L31	1M31	1M31	1L31
5	Cover Gasket	30B34	0B34	0B34	0B34
6	Rotor**	30LE24	00LE24	0LE24	1LE24
7	Retaining Ring	P206-34	P206-34	P206-34	P206-34
8	Idler Gear (Standard Pump)	30L32	00B32-1	0B32-1	1L32-1
8	Idler Gear (Mod. "H" Pump)	30L32	00B32	0B32	1L32
9	Housing Plug Assembly	1LA11	1LA11	1LA11	1LA11
10	Seal Assy (Buna N)	1LA9	1LA9	1LA9	1LA9
11	O-Ring (Buna N)	P701-34-37	P701-34-37	P701-34-37	P701-34-37
10	Seal Assy (Viton)	1LA9-7	1LA9-7	1LA9-7	1LA9-7
11	O-Ring (Viton)	P701-34-77	P701-34-77	P701-34-77	P701-34-77

*Specify pump rotation
**Specify if standard or Modification "A" shaft end

See page 6 for relief valve parts identification

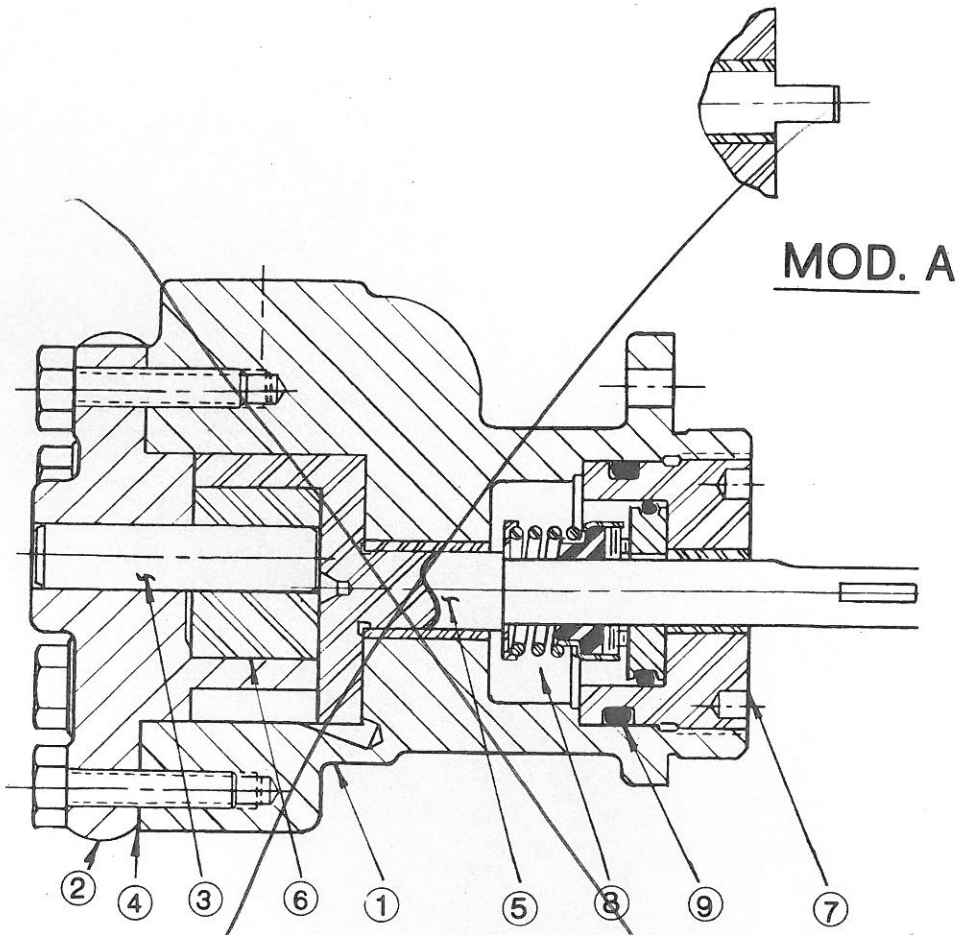

SERIES 2LE-2LEV PUMP PARTS LIST

ITEM NO.	PART DESCRIPTION	SIZE 2 PART NO.
1	Housing Assembly (LE)	2LE2
1	Housing Assembly (LEV)*	2LEV2
	Cover Assembly	2L6
2	Cover	2L35
3	Idler Pin	2L31
4	Cover Gasket	2RFD34
5	Rotor**	2LE24
6	Idler Gear (Standard Pump)	2L32-1
6	Idler Gear (Mod. "H" Pump)	2L5
7	Housing Plug Assembly	1LA11
8	Seal Assembly (Std., Buna N)	1LA9
8	Seal Assembly (Viton)	1LA9-7
9	O-Ring (Standard, Buna N)	P701-34-37
9	O-Ring (Viton)	P701-34-77

*Specify pump rotation
**Specify if standard or Modification "A" shaft end
See page 6 for relief valve parts identification

BULLETIN 710
I/M 412537-236
3/86

INSTRUCTION MANUAL

FOR
MODEL 435-2
RELIALARM VIBRATION SWITCH

Vitec INCORPORATED

23645 Mercantile Road, Cleveland, Ohio 44122

(216) 464-4670 TELEX 98-5354

Vitec INCORPORATED
MACHINERY PROTECTION INSTRUMENTATION
23645 Mercantile Road,
Cleveland, Ohio 44122
(216) 464-4670 Telex: 98-5354

CONTENTS

	Page
RECEIVING AND HANDLING	a
INTRODUCTION	1
DESCRIPTION	1
SPECIFICATIONS	2
OPERATING DETAILS	2-3
- Preparing The Relialarm For Use	
- Relialarm Circuit Description	
MAINTENANCE	4
SUPPLEMENTARY DRAWINGS	4

RECEIVING & HANDLING

ACCEPTANCE

Vitec terms of sale, in all instances, are F.O.B. point of origin, freight prepaid. Thoroughly inspect this equipment before accepting shipment from the transportation company. If any of the goods called for in the bill of lading or express receipt are damaged or the quantity is short, do not accept them until the freight or express agent makes an appropriate notation on your freight bill or express receipt. Request him to make an inspection. Claims for loss or damage in shipment must not be deducted from the Vitec invoice, nor should payment of the Vitec invoice be withheld awaiting adjustment of such claims since the carrier guarentees safe delivery. If equipment is not to be installed within three (3) weeks, repack and adhere to the conditions of ANSI/ASME specifications N45.2.2 (Level B).

If considerable damage has been incurred to your shipment and the situation is urgent, contact the nearest Vitec District Office for assistance.

UNPACKING AND STORAGE

Store equipment per ANSI/ASME Specifications N45.2.2 (Level B). Unpack only for installation or periodic energizing (2 weeks, every six months).

PRODUCT WARRANTY

Except as otherwise provided in Vitec's Standard Condition of Sale, all new apparatus sold by the company is warranted to be free from defects in material and workmanship and to conform to any applicable drawings and specifications approved by the company for a period of one year from date of shipment to original user or 18 months from date of shipment by company to buyer, whichever period is shorter.

If within this period the company receives from the buyer written notice of any alledged defect in any such apparatus and if this apparatus is found not to be in conformity with this warranty (the buyer having provided the company a reasonable opportunity to perform any appropriate tests thereon) the company will, at its option and expense, either repair the same or supply a replacement therefore.

The company under either option shall have the right to require the buyer to deliver the apparatus for this purpose to a designated service center and the buyer shall pay all charges for inbound and outbound transporation and for services of any kind, diagnostic or otherwise, excepting only the direct and actual cost of apparatus repair or replacement as provided above.

Apparatus sold but not manufactured by the company will be warranted as to defects in material and workmanship consistent with the warranty policy of the original manufacturer of the apparatus.

INTRODUCTION

This Instruction Manual has been prepared to instruct operating personnel in the proper use, application and maintenance of the Vitec Relialarm Vibration Switch. In order to obtain maximum usage from the instrument, the contents of this Manual should be studied thoroughly. This Manual contains comprehensive technical data and provides the required reference information for system installation, operation and field maintenance. This book should be kept as a permanent source of information on your system.

The Relialarm is simple to use and with proper installation should offer trouble-free service. In the event of installation or operational difficulties, refer the matter to the nearest Vitec Sales Office.

DESCRIPTION

The Relialarm is an electronic signaling device designed to protect rotating or reciprocating machinery from damage which can result from excessive vibration. The Relialarm produces a switching action when a pre-determined vibration limit is exceeded, thus warning of a possible malfunction such as failing bearings, bent or broken shaft, broken impeller blades, etc. The Relialarm Relay contacts can be connected to give an alarm indication or automatic machine shutdown upon exceeding the set vibration limit.

The Relialarm comes complete and ready for installation. The trip point has not been factory adjusted and must be set for the specific application. The system consists of a Model 4033-Velocity Sensor that converts mechanical energy to an electrical signal, and an electronic assembly which provides a 4-20 Ma analog output proportional full scale setting, two (Jumper Selectable) Full Scale Ranges, 20 Mils & 25 Mils, and Relay for an alarm or shutdown function.

The Pickup is connected to Model 435-2 via a two-conductor shielded cable. Ring or spade lugs are required for all cable connections to the Model 435-2 Terminal Block.

SPECIFICATIONS

FREQUENCY	15 Hz To 1500 Hz.
LIMIT SET POINT RANGE	0-20 Mils & 0-25 Mils (Jumper Selectables)
TEMPERATURE	+ 32°F to + 140°F
LIMIT SET POINT ACCURACY	± 5% Of Full Scale
REPEATABILITY	± 1% Of Full Scale
OVERALL DIMENSIONS	4-1/2 Sq. x 2-3/16 High
POWER REQUIREMENT	115 VAC, 50/60 Hz

OPERATING DETAILS

PREPARING THE RELIALARM FOR USE

1. Mount the transducer on the machine to be monitored, preferably on or near a bearing housing.

2. Install the Relialarm switch in a suitable location and connect the signal input cable to the transducer.

3. Connect the input power, relay output and/or the analog output relay output cables to their respective functions. (See Drawing # 602813-151).

   (Separation of signal lines from control and power lines is most important. The ideal situation is to run twisted, shielded signal lines in a separate conduit from all control and power lines. At a minimum, 6 inches or more physical separation between signal, control, and power lines should be maintained.

   Use shielded signal wires between transducer terminals and Relialarm terminals to minimize electrostatic pickup.

   The shielding is most effective if only one shield connection to ground is made. This should be at the input to the Relialarm.

OPERATING DETAILS- CONT'D)

PREPARING THE RELIALARM FOR USE (CONT'D)

Use twisted signal wires between transducer terminals and relialarm terminals to minimize inductive pickup.

A rule of thumb for twists per foot is the following:

___ for #18 -- 2 conductor wire . . . . . 12 twists per foot.

___ for #18 -- 3 conductor wire . . . . . 8 twists per foot.

___ for larger wire, or more conductors, less twists per foot may be used.

Twisting will result in cancellation of undesirable currents that could be induced in signal wires by the magnetic fields from adjacent high current conductors (such as high current 60 Hz. power lines).

4. Adjust the limit setpoint pot. R-12 for desired operating limit. NOTE: The small arrow on the adjustment pot. should be set adjacent to the desired percent of full scale.

5. The Relialarm is now ready for operation and required only application of input power (115 VAC, 50/60 Hz.)

6. Adjust time delay potentiometer, R17 for required time delay, CW to increase time delay, CCW to decrease time delay. A 10 second delay requires approximately 560Ω , a 7.5 second delay, approximately 1200 Ω and 5 second delay, approximately 3500 Ω . The time delay has been factory set at 10 seconds unless customer has requested otherwise.

RELIALARM CIRCUIT DESCRIPTION

The Velocity transducer input signal is connected to TB1-4 and Signal Return to TB1-5. This signal is applied to a gain-integrator stage (A2-A) to give corresponding output in the mils mode. R25 is the gain adjustment. The position of JP1 and JP2 determine the full scale value of 25 mils or 20 mils displacement respectively. The gain adjustment R25 is factory preset and should require no further adjustment.

The AC signal at the output of A2-A pin 1 is rectified and filtered by A2-B and A2-C to give a DC signal in mils proportional to the vibration signal in velocity. The DC output from A2-C pin 8 is split into two parallel signal paths. One path connects to a voltage to current amplifier section consisting of A2-D, A1-C, A1-D and transistor Q1. This section converts the DC voltage signal into a proportional 4 to 20 ma DC output.

The other signal path is connected to a comparator A1-A which has a reference limit set point (R12) voltage applied to the other input. This comparator compares the vibration level with the preset limit and outputs a DC signal level when the vibration level exceeds the limit set point.

RELIALARM CIRCUIT DESCRIPTION-(CONT'D).

The output from the comparator is applied to a time delay circuit (A1-B) whose output voltage level can be time delayed depending upon the adjustment of R17, See Schematic Dwg. 79924-81.

The output voltage of A1-B in turn then turns Q2 on or off, energizing or de-energizing the relay.

MAINTENANCE

Maintenance of the Relialarm is generally limited to locating circuit malfunctions with the use of a suitable ohmmeter.

A simple operational test is provided below. The Relialarm (and transducer) should be returned to the factory for repair and recalibration if it does not respond to this test or if circuit problems occur.

OPERATIONAL TEST

1. Simulate machinery vibration by physically shaking the transducer for a relay closure in the switch housing. Relay closure is evidence that the unit is responding to vibration signals.

2. Move trip point slowly down until Relialarm trips. Trip should occur at the vibration level of operating equipment. (NOTE: Relay should be jumpered out or disconnected during this test if undesirable to shut down-equipment. After checkout, move limit setpoint back to desired trip setting.

SUPPLEMENTARY DRAWINGS

Model 435-2, Vibration Switch

Installation Dwg. 602813-151

Model 435-2, Vibration Switch Schematic 79924-81

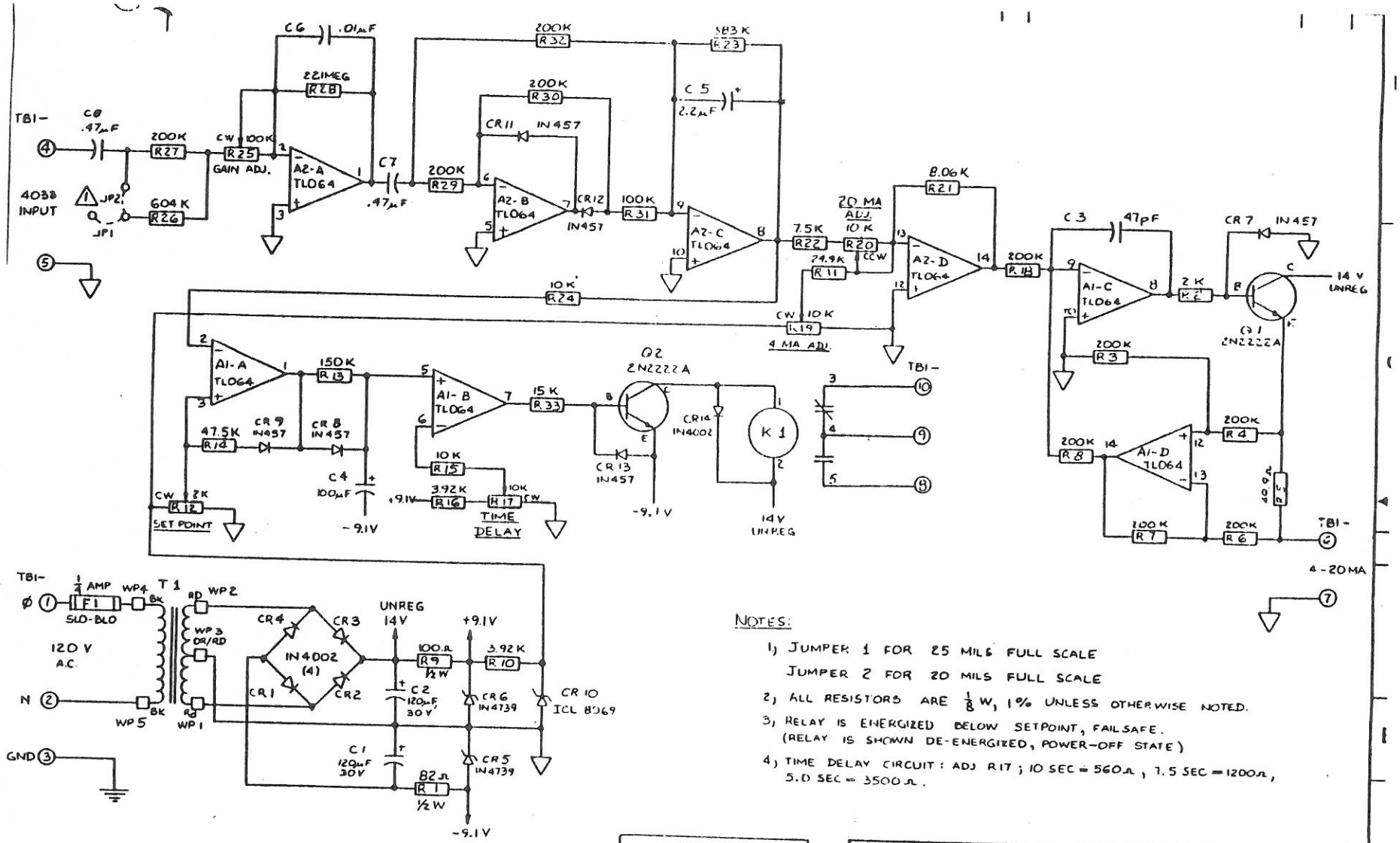

NOTES:

1) JUMPER 1 FOR 25 MILS FULL SCALE
   JUMPER 2 FOR 20 MILS FULL SCALE
2) ALL RESISTORS ARE 1/8 W, 1% UNLESS OTHERWISE NOTED.
3) RELAY IS ENERGIZED BELOW SETPOINT, FAILSAFE.
   (RELAY IS SHOWN DE-ENERGIZED, POWER-OFF STATE)
4) TIME DELAY CIRCUIT: ADJ R17; 10 SEC = 560Ω, 7.5 SEC = 1200Ω, 5.0 SEC = 3500Ω.

POWER TABLE			
REF DESIG	TYPE	-9.1V	+9.1V
A1,2	TL064	4	11

M/L 412554-226
P.C.B. 602827-88

S.O. NO

APPROVALS

DRAWN	CHECKED	SCALE
E.A.	D.J.S.	N

UNLESS OTHERWISE SPECIFIED DIMENSIONS ARE IN INCHES TOLERANCES ARE:
FRACTIONS ± 1/64 DECIMALS .XX ± .01 .XXX ± .005 ANGLES ± 1/2°

DO NOT SCALE DRAWING

Vitec INCORPORATED — MACHINERY PROTECTION INSTRUMENTATION

MODEL 435-2, VIBRATION SWITCH, MODEL 4033 INPUT, 20/25 MILS F.S., 4-20 ANALOG OUT

SIZE	CODE IDENT NO	DRAWING NO.	SHEET 1 OF 1
C	55093	79924-81	

REVISIONS			
LTR	DESCRIPTION	DATE	APPR

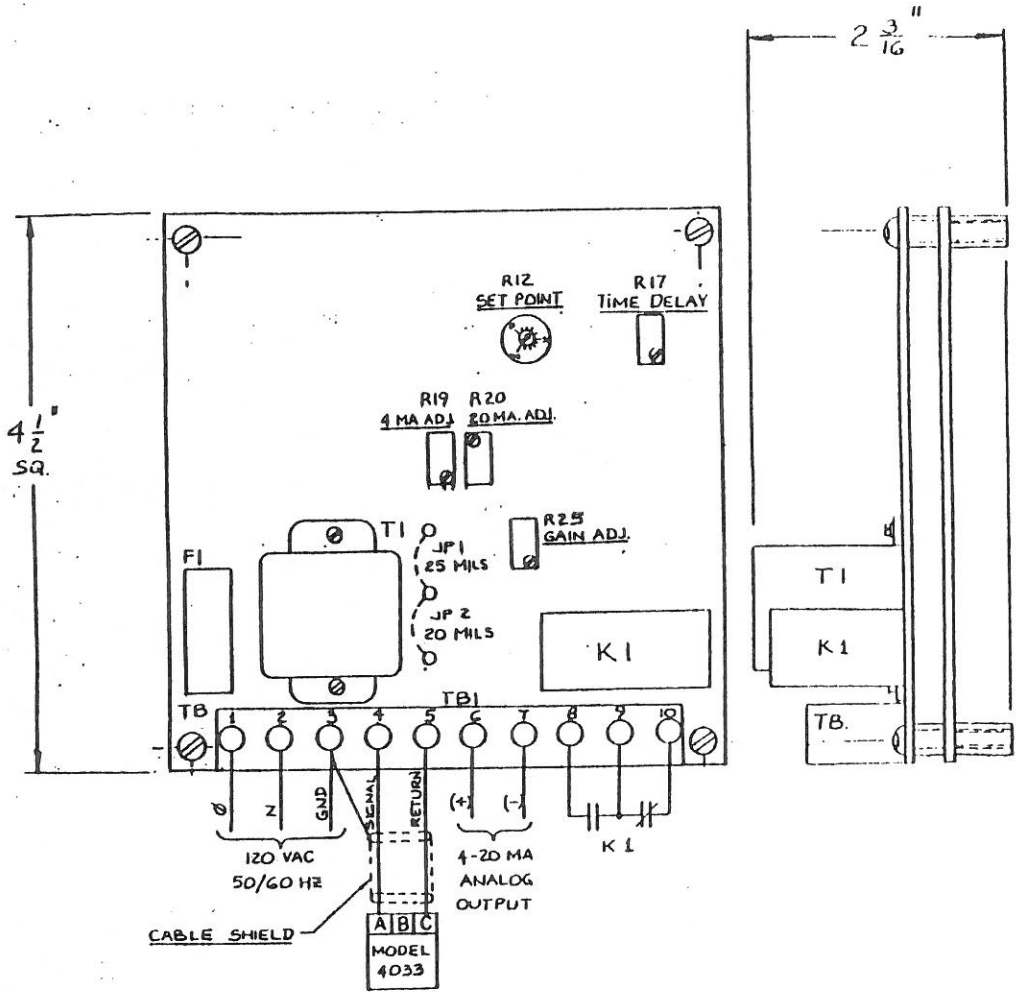

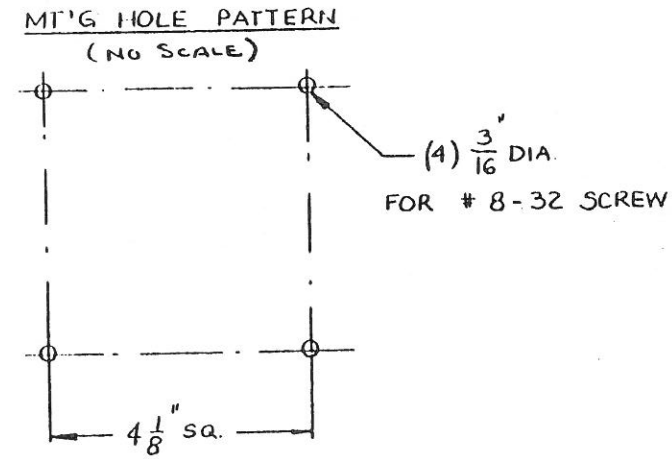

SO NO.		
APPROVALS		SCALE
DRAWN BA 3-26-86	CHECKED JS 3-26-86	FULL
UNLESS OTHERWISE SPECIFIED DIMENSIONS ARE IN INCHES TOLERANCES ARE: FRACTIONS ± 1/64 DECIMALS .XX ± .01 .XXX ± .005 ANGLES ± ½°		
DO NOT SCALE DRAWING		

Vitec INCORPORATED — MACHINERY PROTECTION INSTRUMENTATION

MODEL 435-2, VIBR. SWITCH INSTALLATION DWG.

SIZE	CODE IDENT NO.	DRAWING NO.	SHEET	OF
B	55093	602813-151	1	1

SHELLMOUTH CONCRETE TENDER 6587
SUBMITTAL STATUS AS OF NOVEMBER 10, 2015
KGS FILE #14-0300-026

Date Submitted	Type	Subject	Submitted Via	Status	Date of Last Response	Comments
	Submittal	Labour and Materials Payment Bond		Received by MIT		
Note - submittals prior to 05 Oct 2015 have not been logged and tracked on this spreadsheet						
05-Oct-15	PCN	PCN01-REPAIR TO EXPOSED WATERSTOP	Transmittal 0096	Pricing Submitted	08-Oct-15	Under Review (Partial Response to authorize Microfine cement supply on 10-9-2015)
05-Oct-15	FI	FI01-PLATE SECTIONS TO BE REMOVED	Transmittal 0096	Issued	05-Oct-15	
05-Oct-15	FI	FI02-TWO VOIDS IN WEST FACE OF CONCRETE AT CTJ ALONG EAST SIDE	Transmittal 0096	Issued	05-Oct-15	
05-Oct-15	RFI	Epoxy Injection Supplier Rep	Email Mon 10/5/2015 4:29 PM	Responded	10/8/2015 and 10/9/2015	
06-Oct-15	Submittal	Schedule Rev.02	Email Tue 10/6/2015 9:25 AM	Amend and Resubmit	09-Oct-15	
06-Oct-15	PCN	PCN02-Rollway Crest CTJ Repairs	Transmittal 0097	Pricing Submitted	09-Oct-15	Under Review
06-Oct-15	FI	FI03-CRACK MAPPING AND IDENTIFICATION IN SPILLWAY WALLS	Transmittal 0097	Issued	06-Oct-15	
07-Oct-15	Safety	Incident Report 01		Issued	07-Oct-15	
07-Oct-15	Safety	Incident Report 02		Issued	07-Oct-15	
07-Oct-15	Email	Report on MIT Safety Inspection with Instructions		Issued	07-Oct-15	
08-Oct-15	RFI	Microfine Cement Supplier	Email Thu 10/8/2015 6:55 AM	Responded	09-Oct-15	
08-Oct-15	Submittal	Conduit Pour Plan	Email Thu 10/8/2015 6:42 AM	Amend and Resubmit	16-Oct-15	
08-Oct-15	Submittal	Conduit Laydown Plan	Email Thu 10/8/2015 6:42 AM	Amend and Resubmit	16-Oct-15	
09-Oct-15	Submittal	Spillway Scaffold Tieback Engineered Drawings (S-5 R1)	Email Fri 10/9/2015 9:48 AM	Amend and Resubmit	09-Oct-15	
09-Oct-15	Submittal	Conduit Survey	Email Fri 10/9/2015 11:01 AM	Amend and Resubmit	09-Oct-15	
13-Oct-15	Submittal	Conduit Headwall Formwork (S-04 R2)	Email Tue 10/13/2015 9:24 AM	Amend and Resubmit	09-Oct-15	
14-Oct-15	Submittal	SpillwayFall Arrest Drawing (S-01 R3)	Email Wed 10/14/2015 7:02 AM	Not Reviewed - Superceded by R5		
14-Oct-15	Submittal	Conduit Platform Structural Details (S-02 R2)	Email Wed 10/14/2015 7:02 AM	Not Reviewed - Superceded by R5		
14-Oct-15	Submittal	Trailer Support (S-03 initial issue, no Rev)	Email Wed 10/14/2015 7:02 AM	Reviewed as noted	19-Oct-15	
14-Oct-15	Submittal	Conduit Headwall Formwork (S-04 R3)	Email Wed 10/14/2015 7:02 AM	Reviewed as noted	19-Oct-15	
14-Oct-15	Submittal	Spillway Scaffold Tieback Engineered Drawings (S-5 R3)	Email Wed 10/14/2015 2:27 PM	Reviewed as noted	15-Oct-15	
14-Oct-15	Submittal	Conduit Platform Structural Details (S-02 R5)	Email Wed 10/14/2015 3:31 PM	Reviewed	19-Oct-15	
14-Oct-15	Submittal	Spillway Fall Arrest Drawing (S-01 R5)	Email Wed 10/14/2015 3:13 PM	Amend and Resubmit	19-Oct-15	
14-Oct-15	Info	KGS Issued measurements of concrete repair areas	Transmittal 0112	INFO	14-Oct-15	Issued by PZ to DG
14-Oct-15	RFI	RFI #5 - Anchorage for work platform at conduit	Email Wed 10/14/2015 3:51 PM	Reviewed	19-Oct-15	
15-Oct-15	EWO#1	Extra Work Order accepting PCN#01	Thu 10/15/2015 3:53 PM	Accepted	15-Oct-15	Issued by MIT
15-Oct-15	EWO#2	Extra Work Order accepting PCN#02	Thu 10/15/2015 3:53 PM	Accepted	15-Oct-15	Issued by MIT
19-Oct-15	Schedule	Schedule Rev. 3	Email Mon 10/19/2015 4:41 PM	Not Reviewed - Received for Info	30-Oct-15	
20-Oct-15	NCR	NCR #1 Holes for Embedded Dowels	Tue 10/20/2015 12:36 PM	Issued	20-Oct-15	CAR Required
20-Oct-15	FI	Field Instruction No. 4 Top Steep Placement for Repair Type 4	Tue 10/20/2015 12:36 PM	Issued	20-Oct-15	
20-Oct-15	Submittal	Trailer Support (S-03 initial issue, no Rev)	Email Tue 10/20/2015 5:03 PM	CANCELLED	20-Oct-15	
21-Oct-15	Submittal	Spillway Pour Plan	Wed 10/21/2015 1:18 PM	Reviewed As Noted	23-Oct-15	
21-Oct-15	Submittal	Counduit Pour Plan (Revised)	Wed 10/21/2015 1:22 PM	Reviewed as Noted	05-Nov-15	
21-Oct-15	Submittal	Counduit Work Plan (Revised)	Wed 10/21/2015 1:25 PM	Not Reviewed - Superceded by new version 23-Oct	N/A	
21-Oct-15	Submittal	Counduit Laydown Plan (Revised)	Wed 10/21/2015 1:24 PM	Not Reviewed - Superceded by new version 22-Oct	N/A	
21-Oct-15	Submittal	Spillway Fall Arrest Drawing (S-01 R6)	Wed 10/21/2015 1:32 PM	Amend and Resubmit	23-Oct-15	
21-Oct-15	Submittal	Conduit Platform: Crane Certtification for Platform Lift	Wed 10/21/2015 2:35 PM	Reviewed As Noted	23-Oct-15	
22-Oct-15	Submittal	Spillway Concrete Placement Grout Mixer Data Sheet	Thu 10/22/2015 6:52 AM	Reviewed As Noted	23-Oct-15	
22-Oct-15	Submittal	Counduit Laydown Plan (Revised) w/ Cross-Section	Thu 10/22/2015 6:58 AM	Reviewed As Noted	23-Oct-15	
22-Oct-15	FI	Field Instruction No. 5 Concrete Inspection Status	Thu 10/22/2015 9:30 AM	Issued	22-Oct-15	
22-Oct-15	RFI	RFI#6 Regarding Vertical Formwork for Spillway U/S Wing Wall	Thu 10/22/2015 3:29 PM	Responded	22-Oct-15	
22-Oct-15	Submittal	Notification of Excavation Subcontractor	Thu 10/22/2015 3:51 PM	Amend and Resubmit	23-Oct-15	NOTE: The required items have been submitted separately in subsequent submissions
23-Oct-15	Submittal	Counduit Work Plan (Revised) (Machine Excavation)	Fri 10/23/2015 7:04 AM	Reviewed As Noted	23-Oct-15	
23-Oct-15	FI	Field Instruction No. 6 Epoxy Injection Pressures	Fri 10/23/2015 1:42 PM	Issued	23-Oct-15	
23-Oct-15	PCN	PCN #3 Urethane Injection of Longitudinal CTJ's	Fri 10/23/2015 2:51 PM	Issued	23-Oct-15	
23-Oct-15	FI	Field Instruction No. 7 Concrete Inspection Status	Fri 10/23/2015 4:14 PM	Issued	23-Oct-15	
23-Oct-15	FI	Field Instruction No. 8 Grout Mixing Instructions	Fri 10/23/2015 4:14 PM	Issued	23-Oct-15	
26-Oct-15	Submittal	Conduit Platform: Safe Work Plan for Crane Lift	Mon 10/26/2015 7:27 AM	Reviewed As Noted	27-Oct-15	
26-Oct-15	Submittal	Subcontractor Forms for Minty's Moving	Mon 10/26/2015 10:25 AM	Reviewed	30-Oct-15	
26-Oct-15	Submittal	Conduit Platform: Certification of Platform Weight for Crane Lift	Mon 10/26/2015 10:40 AM	Reviewed	27-Oct-15	
26-Oct-15	Submittal	Conduit Excavation Permit	Mon 10/26/2015 2:07 PM	Reviewed	27-Oct-15	
26-Oct-15	Submittal	Spillway Fall Arrest Drawing (S-01 R7)	Mon 10/26/2015 2:37 PM	Reviewed	27-Oct-15	
26-Oct-15	Submittal	Conduit Platform: Safe Work Procedures for Crane Lift	Mon 10/26/2015 2:43 PM	Reviewed	27-Oct-15	
26-Oct-15	NCR	NCR #02 Heating and Wet Cure Not Maintained for Grout Curing	Mon 10/26/2015 3:54 PM	Issued	26-Oct-15	CAR Required
27-Oct-15	Submittal	Subcontractor Forms for Birch Creek Enterprises	Tue 10/27/2015 8:41 AM	Reviewed as Noted	30-Oct-15	
27-Oct-15	Submittal	Conduit Excavation - Email Modifying Procedure	Tue 10/27/2015 9:15 AM	Reviewed as Noted	29-Oct-15	
27-Oct-15	Submittal	Rebar Shop Drawings for Conduit Headwall	Tue 10/27/2015 11:18 AM	Reviewed as Noted	27-Oct-15	
27-Oct-15	FI	FI No. 09 - REVEGETATION OF WORK AREAS – CONDUIT AND SPILLWAY AREAS	Transmittal 0157	Issued	27-Oct-15	
28-Oct-15	Submittal	Welder's Certificate	Wed 10/28/2015 6:50 AM	Reviewed	30-Oct-15	
28-Oct-15	Submittal	Subcontractor's Bidder's Certification Form for Birch Creek	Wed 10/28/2015 9:12 AM	Amend and Resubmit	30-Oct-15	
28-Oct-15	Submittal	Email from Charleson Regarding Fall Arrest D-Anchors	Wed 10/28/2015 10:13 AM	Reviewed	30-Oct-15	
28-Oct-15	Submittal	CAR for NCR #02	Wed 10/28/2015 11:42 AM	Reviewed as Noted	02-Nov-15	
28-Oct-15	Submittal	Conduit Platform: Hanger Bracket Revisions	Wed 10/28/2015 1:28 PM	Amend and Resubmit	29-Oct-15	
28-Oct-15	FI	FI No. 10 - BRACKET REINFORCEMENT FOR CONDUIT WORK PLATFORM	Transmittal 0159	Issued	28-Oct-15	
28-Oct-15	FI	FI No. 11 - REBAR INSPECTION OF W1-W11 AND E1-E4, E6 AND E7	Transmittal 0163	Issued	28-Oct-15	
29-Oct-15	PCN	Pricing for PCN #3	Thu 10/29/2015 7:26 AM	Revision Requested	30-Oct-15	
29-Oct-15	Submittal	Conduit Platform: Hanger Bracket Revisions (Dwg (S-02 R7)	Thu 10/29/2015 8:25 AM	Amend and Resubmit	29-Oct-15	
29-Oct-15	Submittal	Pricing for Waterstop Urethane Injection on Spillway West Wing Wall	Thu 10/29/2015 11:25 AM	Revision Requested	30-Oct-15	
30-Oct-15	Submittal	Crack Injection: Chemco/Vector Recommendation on Workplan Revision	Fri 10/30/2015 3:34 PM	Reviewed as Noted	04-Nov-15	
30-Oct-15	Submittal	Pricing for Waterstop Urethane Injection on Spillway West Wing Wall (Rev.1)	Fri 10/30/2015 3:35:00 PM	Not Reviewed - Injection was done at contract unit rates fc	02-Nov-15	
30-Oct-15	Submittal	Pricing for PCN #3 (Rev.1)	Fri 10/30/2015 4:30 PM	Breakdown Requested	30-Oct-15	
02-Nov-15	Submittal	Pricing for PCN #3 (Rev.2 - Breakdown Provided)	Mon 11/2/2015 10:21 AM	Amend and Resubmit	03-Nov-15	

SHELLMOUTH CONCRETE TENDER 6587
SUBMITTAL STATUS AS OF NOVEMBER 10, 2015
KGS FILE #14-0300-026

Date Submitted	Type	Subject	Submitted Via	Status	Date of Last Response	Comments
02-Nov-15	Submittal	Spillway Concrete Pour Plan for East and West Chute Placement Areas	Mon 11/2/2015 3:32 PM	Not Reviewed - Pour was Cancelled	02-Nov-15	
02-Nov-15	NCR	NCR #03 - Heat Not Maintained	Mon 11/2/2015 5:20 PM	Issued	02-Nov-15	
02-Nov-15	NCR	NCR #04 - Heat Not Maintained	Mon 11/2/2015 5:20 PM	Issued	02-Nov-15	
03-Nov-15	RFI	RFI Requesting Permission to Water Flush Flush Epoxy Surface Ports	Tue 11/3/2015 1:39 PM	Reviewed as Noted	04-Nov-15	
03-Nov-15	RFI	RFI Requesting Permission to Delete Chemco Rep On Site for Remainder	Tue 11/3/2015 1:39 PM	Reviewed as Noted	04-Nov-15	
03-Nov-15	PCN	Pricing for PCN #3 (Rev.3 - Pricing Revised)	Tue 11/3/2015 3:55 PM	Amend and Resubmit	03-Nov	
04-Nov-15	CAR	Corrective Action for NCR 03, 04	Wed 11/4/2015 11:02 AM	Issued	04-Nov	
04-Nov-15	PCN	Pricing for PCN #3 (Rev.3 - Pricing Revised)	Wed 11/4/2015 11:43 AM	Amend and Resubmit	04-Nov	
04-Nov-15	PCN	Pricing for PCN #3 (Rev.3 - Pricing Revised)	Wed 11/4/2015 1:35 PM	Amend and Resubmit	05-Nov	
04-Nov-15	FI	Field Instruction 12 - REBAR INSPECTION OF W1-W11 AND E1-E4, E6 AND E7	Wed 11/4/2015 3:14 PM	Issued	04-Nov	
04-Nov-15	FI	Field Instruction 13 - FORMWORK INSPECTION OF W1-W11 AND E1-E4, E6 AND E7	Wed 11/4/2015 3:14 PM	Issued	04-Nov	
04-Nov-15	FI	Field Instruction 14 - CLEANLINESS INSPECTION OF W1-W11 AND E1-E4, E6 AND E7	Wed 11/4/2015 3:14 PM	Issued	04-Nov	
04-Nov-15	Submittal	Pour Plan for Placement #1 (E1,2,3,4,6,7, W1-11)	Wed 11/4/2015 5:20 PM	Reviewed as Noted	05-Nov	
05-Nov-15	Submittal	Letter of Credit to Delete Chemco Rep On Site for Remainder of Epoxy Inj.	Thu 11/5/2015 3:39 PM	Reviewed (Credit Accepted on Behalf of MIT)	10-Nov	
05-Nov-15	NCR	NCR 05 - SATURATED SURFACE DRY APPLICATION NOT SUCCESSFUL	Thu 11/5/2015 3:43 PM	ISSUED	05-Nov	
06-Nov-15	PCN	Pricing for PCN #3 (Rev.3 - Pricing Revised)	Fri 11/6/2015 9:04 AM	Extra Work Order Issued	06-Nov	
06-Nov-15	Schedule	Documentation on Schedule Completion Date and Request from Owner to Update Schedule	Fri 11/6/2015 12:05 PM	Issued (Email)	06-Nov	
06-Nov-15	RFI	RFI Requesting Permission to use Concrete Set Retarder	Fri 11/6/2015 1:03 PM			
06-Nov-15	FI	Field Instruction 15 - CLEANLINESS INSPECTION OF W1-W11 AND E1-E4, E6 AND E7	Fri 11/6/2015 5:09 PM	Issued	06-Nov	
06-Nov-15	FI	Field Instruction 16 - Concrete Repair in Lower Spillway Chute Transverse Joint Area	Fri 11/6/2015 5:09 PM	Issued	06-Nov	

CUSTOMER: City of Winnipeg

Document No. 5592-GRT-188-01
Rev.
Date

CONTRACTOR: North End Water Pollution Control Center
CONTRACT NO.: 52955
INWALT ORDER NO.: 485592/93/94/95/96/97
NAME OF PROJECT: City of Winnipeg
North End Water Pollution Control Center
CITY'S PROJECT NO.: 8-1-2
ENGINEER'S PROJECT NO.: 42820-14

MACHINE
PM76000

PENNWALT CORPORATION
WARMINSTER, PA. 18974

;. :M	QUAN. PER MACH.	PART NUMBER	DESCRIPTION
			LUBE PANEL INSTRUMENTATION LIST (DWG. NO. P-D2031.3s)
	2	Flow Switch	Universal flow monitor, model No. 00-.5GM-4-L-200V.9-1 -NR-.2D Aluminum body with stainless internals and teflon seals, 0-.5 GPM flow range, .2 decreasing switch setting, 1/2" N.P.T. ports, and 3-wire SPDT switch, 200°F max. temperature, 200 P.S.I. max. pressure. Industrial Dynamics Co., Inc. Berwyn, PA.
	1	Pressure Gage	3 1/2" dial face "Quality" pressure gage, 0-100# range panel mounted with snap ring with "U" clamp. "Marshalloy" construction, black enamel case and ring. 1/4" back connection. Oil service with restriction screw. White dial, black numbers and pointer J.P. Marsh Corp., #H2048
M	1	Pump & Motor	Close coupled pump motor unit. Pump model OLEV-C-A with relief valve set at 90 P.S.I. with mac. spec. B324-2 motor except Nema F2 mounting. 1/4 HP Nema Frame 48, exp. proof, Class 1, Groupd D, ball bearing, 55° rise, 1725 RPM, 3 phase, 230-460 volt, 60 cycle, squirrel cage motor. Capacity: 90 GPH at 0 PSI of 225 SSU oil at 100°F., Tuthill Pump Co.
	3	Thermometer	3 1/2" dial face remote reading thermometer, 30°F to 220°F range, flush panel mount with clamps, center back connection. 1/2" N.P.T. union connected bulb with 6 ft. capillary tube Marsh Instruments Co., #K-4055

DWG. ITEM NO.	QUAN. PER MACH.	PART NUMBER	DESCRIPTION
HE	1	Heat Exchanger	Single pass heat exchanger, for oil cooling using water as coolant to dissipate heat from oil. Maximum operating pressure 75 P.S.I. for both oil and water sides, water connections 1" N.P.T. and oil, Young Radiator Products Co. #HF-202-HY-1P
F	1	Filter	Can flo filter, model CFCA-30 with water absorbing 10 micron element. 200 P.S.I. max. operating pressure, 250°F max. operating temperature, 20 GPM max. flow.
TR	1	Temperature Regulator	Cooling control (3/4: NPT size) with stainless steel adjustment screw, temperature range adjustment 60°-110°F, Spirax Sarco Inc., Model T-4
SV	1	Solenoid Valve	2-way solenoid valve, brass body, normally closed, for water service, explosion proof watertight enclosure, 3/4" NPT size, 120 volts, 60 cycle, min. operating differential pressure 5 P.S.I., Asco Valve Cat. #8211D9
S-W	1	Strainer (Water)	Cast iron body, 250 P.S.I. service, with #31 wire stainless steel cloth 40 mesh open end screen, self cleaning, type AT, Sarco Co.
T	2	PROBE, TEMPERATURE DETECTOR	Resistive temperature detector, Minco Prod. Inc., Model S54 with CP Platinum element, .188" case dia., 4-7/8" case length with (3) 36" leads. Not shown on drawing.
H1		Hose, Oil to Pilow Block	29/32" O.D. x 5/8" I.D. Rubber, Aeroquip Corp. #2556-10
H2		Hose, Oil Drain to Reservoir	1-1/2" I.D. x 2.078 O.D., Black Synthetic Rubber, product #3580-0150. Gates type C-4, Cat. No. 24C4
H3		Hose, Pillow Block	Tube, Synethic Rubber Carcas Woven Fiber with Wire to prevent collapse. 1" I.D. x 1.50 O.D. Gates #SAE100R4

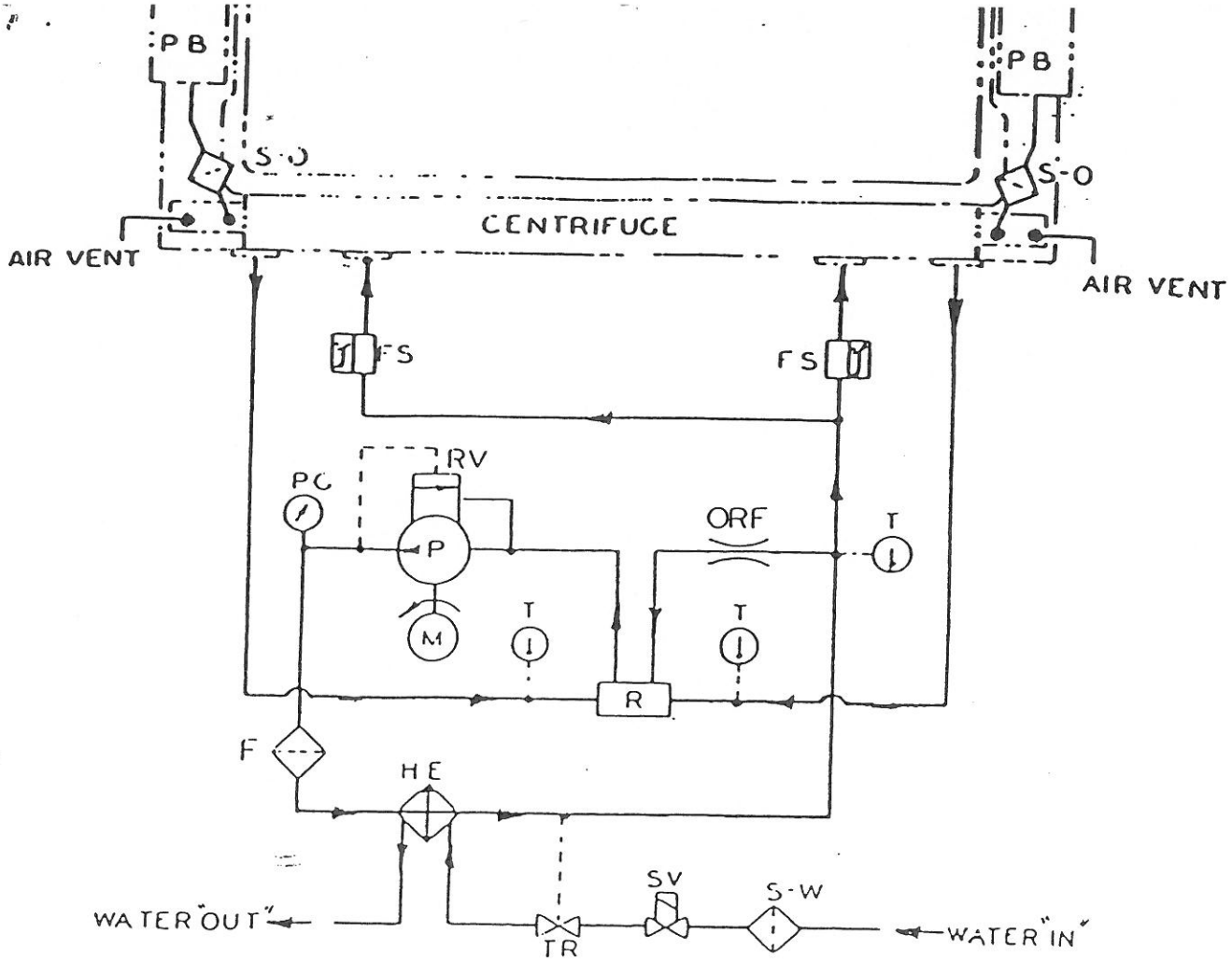

FLOW DIAGRAM

PER USAS Y 32.10

WATER REQUIREMENTS:

10 G.P.M. OF WATER AT 90° F. MAX.

30 P.S.I.G. NOMINAL PRESSURE.

75 P.S.I.G. MAX. PRESSURE

LEGEND

FS — FLOW SWITCH
PG — PRESSURE GAUGE
RV — RELIEF VALVE (PART OF PUMP)
P — PUMP
M — MOTOR
ORF — ORIFICE
T — THERMOMETER
R — RESERVOIR
HE — HEAT EXCHANGER
F — FILTER
TR — TEMPERATURE REGULATOR
SV — SOLENOID VALVE.
S-W — STRAINER-WATER
S-O — STRAINER-OIL
PB — PILLOW BLOCK

LUBE/COOLANT FLOW MONITOR/SWITCH

7.6

Get constant dial reading of lube/coolant flow, plus electric signalling of flow failure.

These flow rate meters are designed expressly for monitoring petroleum based lubricating oils and coolants. Optional remote signalling switches can report lube flow failure or even shut down an operation, to protect costly equipment.

PROTECT EQUIPMENT such as:

- Multiple drill heads
- Heavy roller bearings
- Pinion stands
- Gearboxes
- Calendars
- Mixers
- Crusher bearings
- Grinders
- Machine tools

Universal flow monitors are simple, rugged, and well suited to the rough environment in which the equipment above is usually found. There are no glass tubes to break (and the window is made of tough acrylic). Shocks and flow beyond the rated capacity are not damaging. They can be mounted in any position, with any flow direction.

DESCRIPTION: Monitor bodies are of aluminum, and have 300 series stainless steel internals. Seals are of Teflon.

SWITCH DATA: Four different electric switches are available: (1) Three-wire SPDT, rated 15-amps at 125, 230, or 480 VAC. (2) Four-wire SPDT, rated same. (3) Hermetically-sealed, rated 5-amps RES, 3-amps IND. (4) Explosion-proof, Division 1, Class 1, Group A, B, C & D, Class II, Group E, F & G. Ratings are 5-amps at 125, 150 or 250 VAC, or 28 VDC, SPDT or DPDT. The cam that operates these switches is easily set to provide a signal at any point in the flow range. They can signal either a minimum or maximum flow condition or both, when two switches are employed.

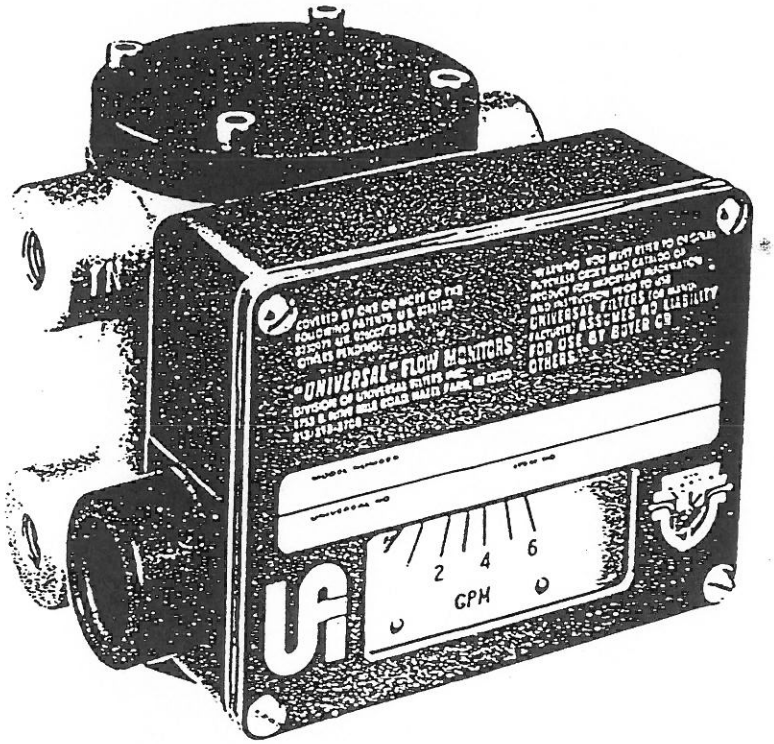

ENGINEERING DATA

Maximum temperature: 200°F
Maximum pressure: 200 psi (3:1 safety factor)
Switch point repeatability: 1% of reading
Readout accuracy: 5% of full scale
Average pressure drop: 2-5 psi (increasing over rated flow range)
Weight (approximate): 4 lbs.

OPERATION: In the Series OO lube/coolant flow monitor, fluid flow causes a fixed-size orifice to move along the axis of a precision-tapered shaft. This varies the net orifice in direct proportion to the flow rate. The equilibrium position of the piston orifice is mechanically linked to the readout pointer, and the force that moves the pointer is also used to actuate electrical or pneumatic signal switches, or to operate a potentiometer.

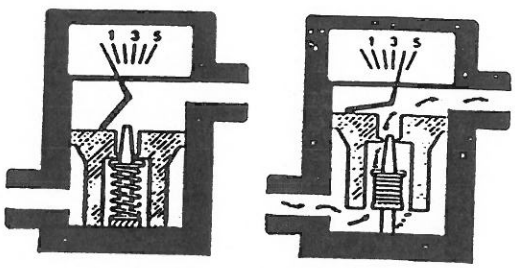

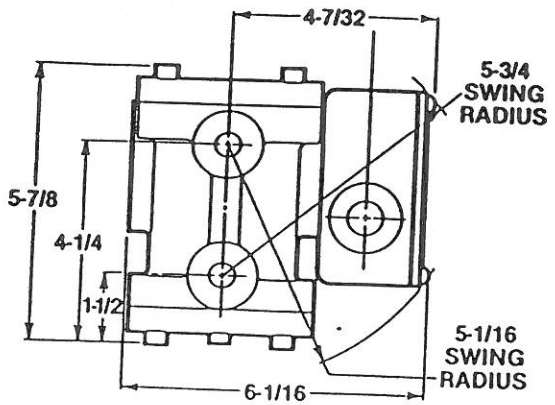

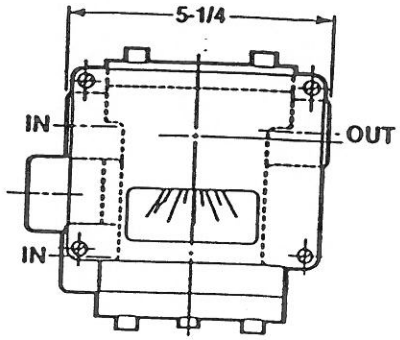

HOW TO ORDER Lube/Coolant Flow Monitors

Select appropriate symbols and build a model code number, as in example shown.

00 .5 GM 4 200V.9 1 N R .2D

EXAMPLE: 00 10 GM – 4 – 32V1.0 – 2 N R – L – F – T – 2D

Lube/Coolant Flow Monitor = 00

MAX. FLOW RATING

Calibration Increments	Maximum Reading (GPH)
1	5
3	15
5	30
	(GPM)
.2	1
.25	2
1.0	5
2.0	10
3.0	15
4.0	20
	(LPM)
.1	.5
.2	1.0
.5	2.0
1.0	4.0
1.0	6.0

SCALE

Calibrated in gallons per hour = GH
Calibrated in gallons per min. = GM
Calibrated in liters per min. = LM

PORT SIZE

NPT		Symbol
1/8	=	1
1/4	=	2
3/8	=	3
1/2	=	4
3/4	=	6

FLUID CHARACTERISTICS

Viscosity number in SSU or centipoise, followed by a "V" (for SSU) or a "C" (for centipoise), plus the fluid specific gravity. (32V1.0 would mean water.) For dual viscosity give two numbers separated by a slash.

INITIAL SWITCH SETTINGS

No Symbol = Lowest possible

Or, give setting(s) in GPM or LPM. Also a symbol to indicate that accuracy is desired during increasing flow (U) or decreasing flow (D). (10D would mean that switch should actuate when flow rate decreases to 10 gpm.) Settings are field adjustable.

SPECIAL OPTIONS

T = Tamper-proof control box enclosure
10 = Bypass at 10 psi differential
PM = Roll pin modification (for panel mounting)

MOUNTING BRACKETS

No Symbol = No bracket
F = Foot bracket
W = Wall bracket

INLET PORT POSITION

U = Upper (2 gpm max. flow)
L = Lower

FLOW DIRECTION

R = Left to right U = Up
L = Right to left D = Down

CONTROL BOX

N = Oil & dust tight
W = Weatherproof (NEMA 4)
X = Corrosive service, weatherproof (NEMA 4X)

READOUT OPTIONS

0 = Local indicator only
1 = One 3-wire SPDT switch
2 = Two 3-wire
3 = One 4-wire SPDT switch
4 = Two 4-wire
5 = One hermetically sealed 3-wire
6 = Two hermetically sealed 3-wire
7 = One SPDT explosion-proof switch
8 = One 1K potentiometer
9 = One pot and one 3-wire
10 = One pot and one 4-wire
11 = One pneumatic switch
17 = One DPDT explosion-proof switch

UNIVERSAL FLOW MONITORS
Division of Universal Filters, Inc.
1755 East Nine Mile Road, Hazel Park, MI 48030
313/398-3704 in MI or 800/521-6382 outstate
TWX 810–232-1602

Form 00-101 Litho in USA Patented 15M1283 CPG

DWG. ITEM NO. SC SHEET 2 OF 2

Case Patterns

PLAIN CASE

Marshalloy Construction
Bottom Connection Only—3½", 4½", 6"

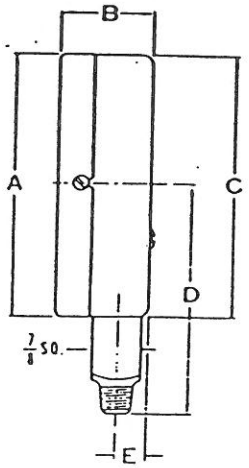

Size	A	B	C	D	E
3½	3 23/32	1 9/16	3¾	3 7/16	35/64
4½	4 51/64	1 35/64	4 13/16	4 45/64	35/64
6	6¼	1 47/64	6¼	5 9/32	9/16

FLANGED CASE

Marshalloy Construction
Bottom or Lower-Back Connections—3½", 4½", 6"

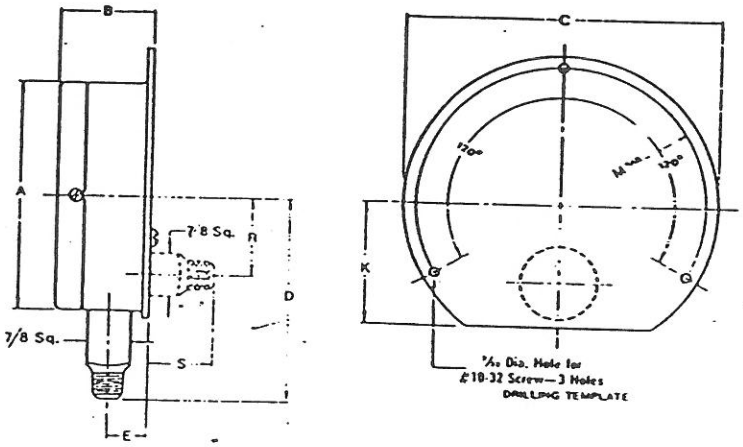

Size	A	B	C	D	E	K	M	R	S
3½	3 23/32	1 23/32	4⅞	3 7/16	49/64	1 15/16	2 5/32	1 5/32	1 7/64
4½	4 51/64	1 49/64	6 3/16	4 11/64	49/64	2½	2 27/32	1⅜	1 7/32
6	6¼	1 61/64	7 11/64	5 9/32	23/32	3¼	3½	2	1½

FLUSH CASE

Marshalloy Construction
Lower-Back Connection Only—3½", 4½", 6"

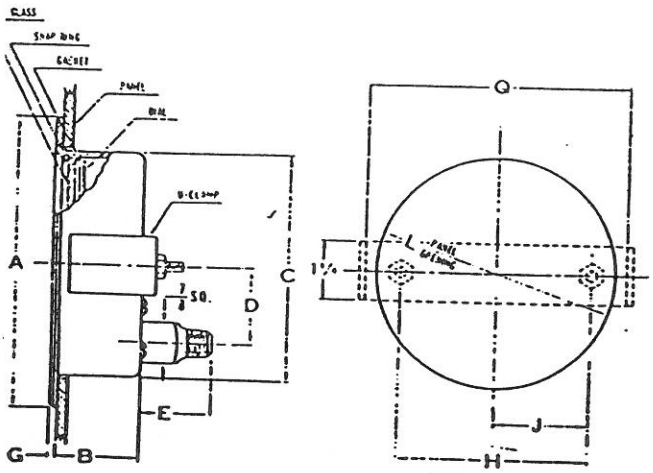

	A	B	C	D	E	G	H	J	L	Q
	4 55/64	1 21/32	3⅜	1 9/32	1 31/64	7/64	2 13/16	1 13/32	3 13/16	4⅜
	[illegible]/64	1 21/32	4 13/16	1⅜	1 7/16	7/64	3⅜	1 15/16	4⅜	5 5/16
	[illegible]/16	1 29/32	6⅜	2	1 23/32	⅜	5 5/16	2 29/32	6 9/16	6 13/16

TURRET CASE

Phenolic Construction
Bottom Connection Only—4½"

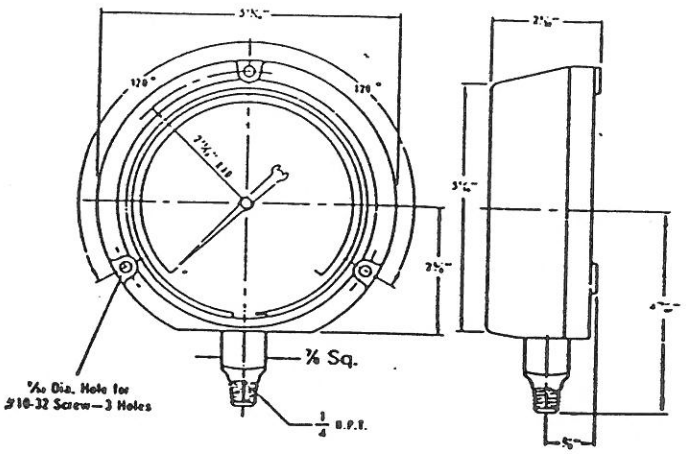

All dimensions are in inches.

DWG. ITEM NO. PG. SHEET 1 OF 2

Marsh Quality Gauge Selection Guide

		DIAL SIZE	3½"						4½"			
		CASE PATTERN	Plain		Flanged			Flush	Plain			
		CONNECTION LOCATION	Bottom		Bottom		Lower Back	Lower Back	Bottom			
		CONNECTION SIZE	¼"		¼"		¼"	¼"	¼"		½"	
		MOVEMENT TYPE	No Recal.	Recali-brator	No Recal.	Recali-brator	Recali-brator	Recali-brator	No Recal.	Recali-brator	No Recal.	Recali-brator
	VACUUM	30" Hg. Vacuum	•	H0205	•	H1205	H1805	H2005	•	H4205	•	•
	COMPOUND	30" Hg. x 30 psig	•	H0212	•	H1212	•	H2012	•	H4212	•	•
		30" Hg. x 60 psig	•	H0214	•	H1214	•	H2014	•	H4214	•	•
		30" Hg. x 150 psig	•	H0218	•	H1218	•	H2018	•	H4218	•	•
		30" Hg. x 300 psig	•	H0224	•	H1224	•	H2024	•	H4224	•	•
RASS CKET ND UBE EMBLY	PRESSURE	0 to 30 psig	H0042	H0242	H1042	H1242	H1842	H2042	H4042	H4242	•	•
		0 to 60 psig	H0046	H0246	H1046	H1246	H1846	H2046	H4046	H4246	•	•
		0 to 100 psig	H0048	H0248	H1048	H1248	H1848	H2048	H4048	H4248	•	•
		0 to 160 psig	H0052	H0252	H1052	H1252	H1852	H2052	H4052	H4252	•	•
		0 to 200 psig	H0054	H0254	H1054	H1254	H1854	H2054	H4054	H4254	•	•
		0 to 300 psig	H0058	H0258	H1058	H1258	H1858	H2058	H4058	H4258	•	•
		0 to 400 psig	H0060	H0260	H1060	H1260	H1860	H2060	•	H4260	•	•
		0 to 600 psig	H0064	H0264	H1064	H1264	H1864	H2064	•	H4264	•	•
		0 to 1,000 psig	H0068	H0268	H1068	H1268	H1868	H2068	•	H4268	•	•
EEL KET ID BE MBLY	HIGH PRESSURE[1] (HYDRAULIC)	0 to 1,000 psig	H0072	H0272	H1072	H1272	•	H2072	•	•	H4672	H4872
		0 to 1,500 psig	H0074	H0274	H1074	H1274	•	H2074	•	•	•	•
		0 to 2,000 psig	H0076	H0276	H1076	H1276	•	•	•	•	H4676	H4876
		0 to 3,000 psig	H0078	H0278	H1078	H1278	•	H2078	•	•	H4678	H4878
		0 to 4,000 psig	•	H0280	•	•	•	•	•	•	•	H4880
		0 to 5,000 psig	H0082	H0282	H1082	H1282	•	H2082	•	H4282	H4682	H4882
		0 to 6,000 psig	•	H0284	•	•	•	•	•	•	•	•
		0 to 10,000 psig	H0090	H0290	•	H1290	•	H2090	•	H4290	H4690	H4890
		0 to 15,000 psig	H0092†	H0292†	•	H1292†	•	•	•	•	•	•
		0 to 20,000 psig	•	•	•	•	•	•	•	H4294†	•	•

gh this exact gauge is not available as a stock item, your needs may be filled immediately by a very similar auge listed nearby. If, however, no stock gauge can be found to fill your quantity needs, contact Marsh.

selection of stock items subject to change without notice.

-pressure gauges have restrictor screw as standard equipment.

ge has a ⅛" N.P.T. connection, not ¼".

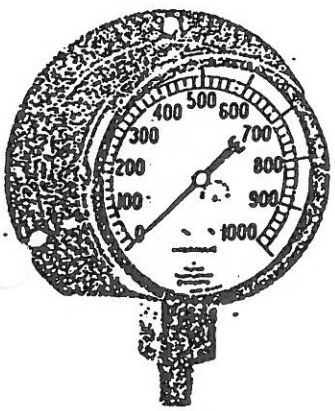

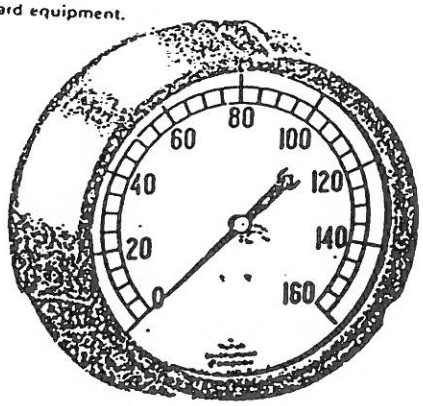

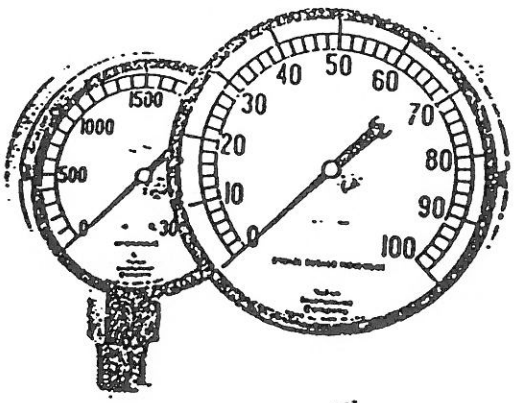

DWG. ITEM NO. PG SHEET 2 OF 3

Features that make a Marsh Quality Gauge a substantially better gauge.

A ...nificant reason why Marsh Quality Gauges bear up on the job is Marsh Unit Construction. Basically, this means that the Bourdon tube, movement, dial and pointer are assembled as a complete unit on the socket, which provides greater strength and stability.

Bourdon tube assembly

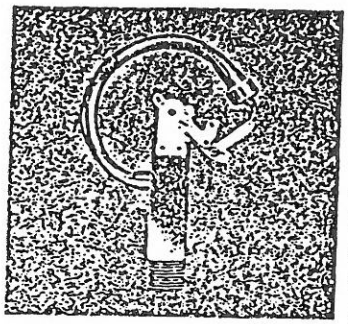

The Bourdon tube is the very heart of gauge design. Tube materials are chosen both for their repeatability and ability to resist corrosive mediums. With the Marsh Quality Gauge line, two tube choices are available: seamless copper alloy Bourdon tube, tip and socket for applications to 1,000 psi, and 4130 alloy steel tube, tip and socket for higher pressures, severe vibration, and mediums not injurious to alloy steel.

Conowelded tube construction

In order to withstand more severe service, Marsh Quality Gauges with 4130 alloy steel tube construction feature Conowelded tip and socket. This method ...lly fuses tip and socket to the tube, resulting in a single, unitized piece that has excellent fatigue cycle life.

Bushed movement

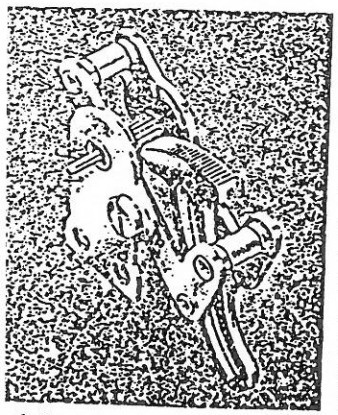

If the Bourdon tube is the heart of a gauge, the movement is the nerve center, because it amplifies the motion of the free end of the Bourdon tube and translates it into the circular pointer motion. To do this with the least amount of friction (excessive friction may cause false indication), Marsh Quality Gauges utilize a bushed movement. Nonmagnetic 18-8 ...ainless steel shafts rotate in accurately reamed ...hosphor bronze bushings. In addition, wider pinion ...nd sector gear faces are used. Mating parts are of ...like metals, providing a non-seizing property, and the ...ector is coin-hardened to give much longer gauge life.

Exclusive Recalibrator to maintain gauge accuracy

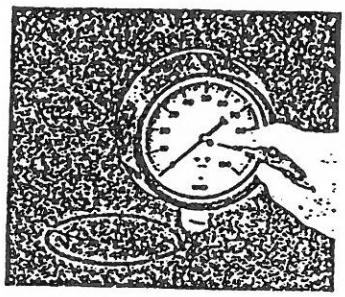

A gauge may occasionally need recalibration, because normal wear and fatigue can eventually cause inaccuracies. Only the Marsh Recalibrator movement can restore the original ±1% accuracy throughout the gauge's entire range.

The Marsh Recalibrator is unique. It gets to the source of the error by actually correcting the relationship of the Bourdon tube to the gauge movement *throughout the entire range of the instrument.* This is the only way to truly recalibrate a gauge. To make an adjustment, simply release all pressure and turn the Recalibrator screw until pointer rests at zero.

Case construction to fit your job needs

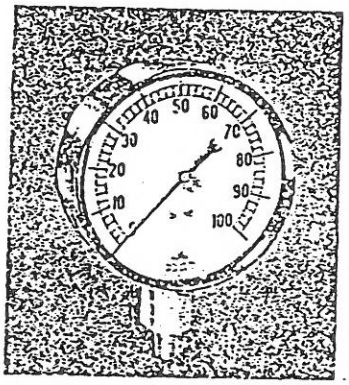

Marshalloy, available in plain, flange, or flush case patterns, meets the needs for all but a few corrosive applications. The case is formed of heavy .109" sheet steel, and zinc-dichromate plated. The case is then given a double coating of black enamel paint which provides an attractive, long-lasting "Tough Coat" finish.

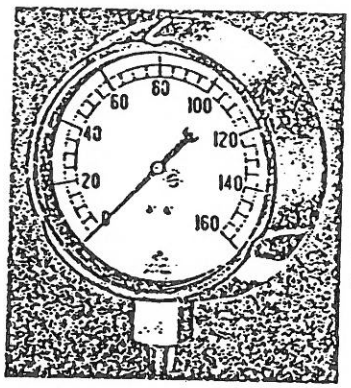

Molded phenolic case construction is offered in a turret pattern. This pattern can be stem-mounted, board-mounted and panel-mounted by use of an optional panel adapter ring. In addition, the phenolic case provides excellent corrosion resistance.

DWG. ITEM NO. PG SHEET 2 OF 2

Model LEV Pumps

Pressures to 300 PSI; 3 Bolt Mounting, Relief Valve

MODEL 1LEV WITH
MODIFICATION A SHAFT

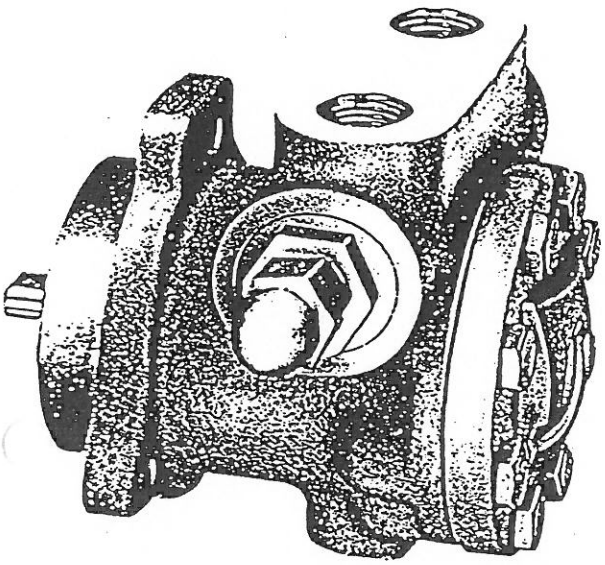

The Model LEV is similar in design, construction and operation to the basic Model LE pump on opposite Page 6 and has the same 3-bolt mounting. In addition, Model LEV is provided with a built-in adjustable bypass relief valve to provide protection for the system on which it is used. The spring-operated poppet valves can be provided with various spring pressure ranges from 10 to 300 psi, so the customer should specify the pressure at which he desires full bypass relief. The relief valve necessitates a specific pump rotation which the customer must specify.

Model LEV pumps feature a new open-coring design which provides improved performance at higher speeds and pressures. The rotor heads are hydraulically balanced to provide minimum end clearance, assuring instant priming and constant capacity over a wide viscosity and pressure range.

Model LEV pumps have a new improved, mechanical face-type seal and a Teflon impregnated outboard bearing that does not require lubrication. They are designed for direct drive and are capable of handling inlet pressures as high as 250 psi at standard 1750 rpm motor speeds, with maximum discharge pressures to 300 psi. They are dimensionally interchangeable with Model LE pumps with a 3-bolt mounting, and with similar previous Tuthill pumps including Model LPFV.

As shown in the tables, Model LEV pumps are provided in five sizes with a capacity range to 11.8 gpm at 3600 rpm. If desired, Model LEV pumps may also be furnished with the reversing feature, with ball bearings, or for pressures to 500 psi. Consult the factory for precise dimensions and performance characteristics of models combining these options.

DIMENSIONAL DATA AND PUMP RATINGS

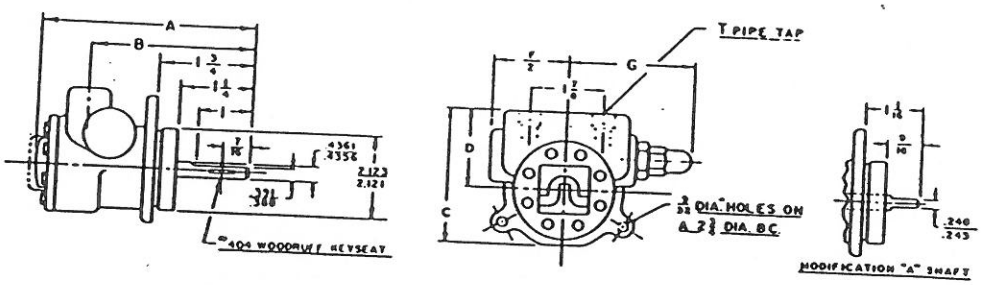

PUMP MODEL	NOMINAL CAPACITY GPM			PUMP DIMENSIONS						
	3600 RPM	1800 RPM	1200 RPM	A	B	C	D	F	G	T
30LEV	.9	.5	.3	5	3 27/32	2 15/16	1 11/16	3 3/16	2 7/8	3/8-18
00LEV	2.1	1.0	.6	4 15/16	3 15/32	3 15/32	2	3 15/16	2 7/8	1/2-14
0LEV	3.7	1.8	1.2	4 15/16	3 15/32	3 15/32	2	3 15/16	2 7/8	1/2-14
1LEV	6.3	3.2	2.1	5 3/32	3 3/8	3 3/16	2	3 1/2	2 7/8	1/2-14
2LEV	11.8	6.2	4.1	5 15/16	4 3/16	3 3/8	2	3 3/4	3 1/32	1/2-14

DWG. ITEM NO. P SHEET 1 OF 4

TUTHILL PUMPS . . . THE INDUST
. . . NOW IN NEW IMPROVED DESIG

Tuthill's small industrial pumps have long been accepted as an industry standard for many applications including lubrication, hydraulic, transfer, circulating, and burning oil services. Now Tuthill offers an expanded and improved line of small industrial pumps, all dimensionally interchangeable with previous models with similar characteristics. In addition Tuthill provides an entirely new series of lubrication pumps which provide unusual advantages in some applications where they can be mounted on equipment drive shafts.

Except for the new TR Series, all of Tuthill's new Series L pumps covered in this catalog operate on the time-proven gear pumping principle graphically illustrated at right. (Operating principles of the TR Series are shown on Page 15.) Series L pumps and their predecessors using this principle have proven their efficiency and economy in thousands of demanding applications over a 45 year period.

The new Series L pumps in this catalog maintain all these advantages but provide improved performance at higher speeds and pressures. These new designs are hydraulically balanced to provide minimum end clearance, assuring instant priming and constant capacity over a wide viscosity and pressure range. They combine the benefits of time-proven operating principles with the latest in modern engineering and production techniques.

FIGURE 1

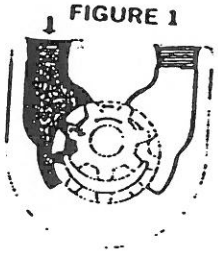

FIGURE 2

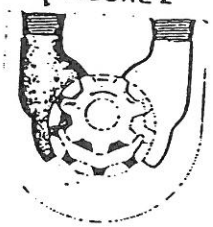

FIGURE 3

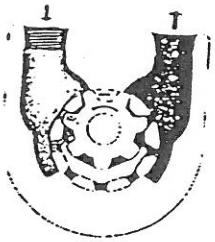

THE PUMPING PRINCIPLE

The schematic diagrams at left graphically illustrate the pumping principle of Tuthill internal gear pumps in which there are only two moving parts. Their pumping action is based on the use of a rotor, idler gear and crescent-shaped partition cast integral with the cover.

Power applied to the rotor is transmitted to the idler gear with which it meshes. The space between the outside diameter of the idler and the inside diameter of the rotor is sealed by the crescent. As the pump starts, the teeth come out of mesh, increasing the volume. This creates a partial vacuum, drawing the liquid into the pump through the suction port (figure 1). The liquid fills the spaces between the teeth of the idler and the rotor and is carried past the crescent partition through the pressure side of the pump (figure 2). When the teeth mesh on the pressure side, the liquid is forced from the spaces and out through the discharge port (figure 3).

GENERAL DESCRIPTION OF MODELS . . . WHERE TO FIND THEM

Included in this catalog are descriptions and data on nine different models of our Series L pumps, our Series TR pumps, our cartridge pumps, and our stripped pump models, together with information on motor-pump combinations, options, bases, etc. On Page 17 are some selection pointers to assist you in choosing between various pump types. To speed your selection process, here are brief descriptions:

Model LA are basic general purpose small industrial pumps for pressures to 300 psi; 2-bolt mounting for foot or flange . . . See Page 4.

Model LAK pumps are provided for pressures to 300 psi; 2-bolt mounting; outboard ball bearing . . . See Page 5.

Model LE are basic small industrial pumps for pressures to 300 psi; for 3-bolt mounting, with short mounting hub . . . See Page 6.

Model LEV pumps for pressures to 300 psi; 3-bolt mounting; relief valve . . . See Page 7.

Model LAH pumps for pressures to 500 psi; 2-bolt mounting . . . See Page 8.

Model LEH pumps for pressures to 500 psi; 3-bolt mounting . . . See Page 8.

Model RLA pumps for pressures to 300 psi; with automatic reversing feature . . . See Page 9.

Model RLE pumps for pressures to 300 psi; with automatic reversing feature . . . See Page 9.

Model LSA stripped pumps for volume OEM applications . . . See Page 16.

Model RLSA stripped pumps for volume OEM applications; with reversing feature . . . See Page 16.

Model LF cartridge pumps . . . See Page 12.

Model LFD cartridge pumps . . . See Page 12.

Model RF cartridge pump with automatic reversing feature . . . See Page 12.

Model RFD cartridge pump with automatic reversing feature . . . See Page 12.

Series L close-coupled pump-motor combinations . . . See Page 10.

Adapter-mounted Series L pump-motor combinations . . . See Page 11.

Base-mounted Series L pump-motor combinations . . . See Page 11.

Motor Availability Chart . . . See Page 10.

Series TR lubrication pumps for mounting directly on equipment drive shafts . . . See Page 14.

Model TRA lubrication pumps . . . See Page 14.

Model TRC lubrication pumps . . . See Page 14.

Model TRL lubrication pumps . . . See Page 14.

Model TRS lubrication pumps . . . See Page 14.

Pumping Selection Pointers . . . See Page 17.

Foot Mountings . . . See Page 19.

Bases for motor-driven units . . . See Page 11.

Reversing Feature Operation . . . See Page 18.

Options and Modifications . . . See Pages 18 and 19.

Ordering Information . . . See Back Cover

©1979 TUTHILL CORPORATION

DWG. ITEM NO. P SHEET 2 OF 4

TANDARD FOR SMALL INDUSTRIAL USAGE
ND ADDITIONAL MODELS

CHARACTERISTIC PERFORMANCE CURVES OF SERIES L PUMPS

"L" SERIES PUMP CHARACTERISTICS
PUMP SPEED—1800 R.P.M.
FLUID VISCOSITY—200 S.S.U.
DOTTED LINES INDICATE CAPACITY-SOLID LINES INDICATE HORSEPOWER

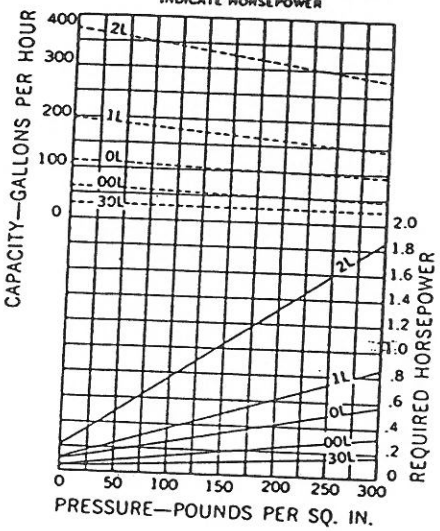

"L" SERIES PUMP CHARACTERISTICS
PUMP SPEED—1800 R.P.M.
FLUID VISCOSITY—35 TO 100 S.S.U.
DOTTED LINES INDICATE CAPACITY-SOLID LINES INDICATE HORSEPOWER

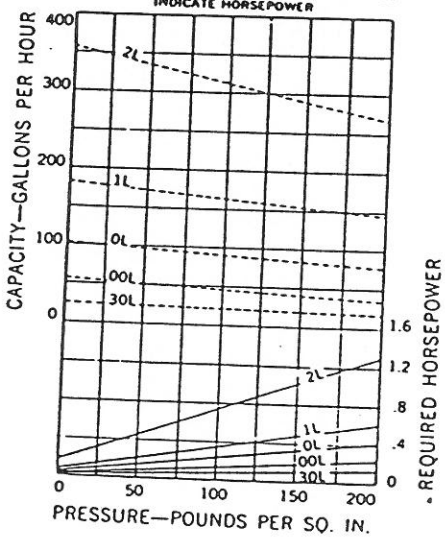

"LH" SERIES PUMP CHARACTERISTICS
PUMP SPEED—1800 R.P.M.
FLUID VISCOSITY—200 S.S.U.
DOTTED LINES INDICATE CAPACITY-SOLID LINES INDICATE HORSEPOWER

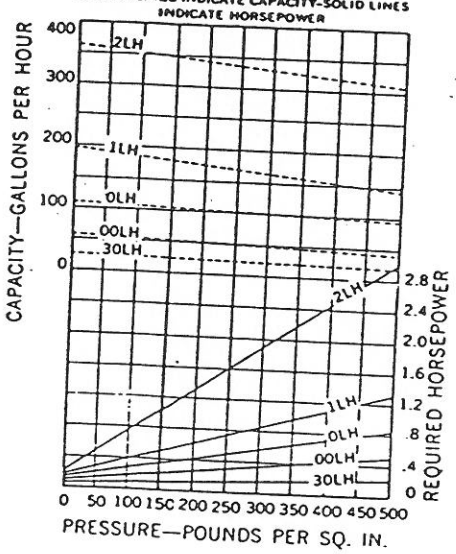

ELATIONSHIP OF SPEED, CAPACITY, PRESSURE AND POWER CONSUMPTION; DISPLACEMENT DATA

he table below illustrates the capacity and suggested driving otor size for different speeds and pressures. These figures re based upon pumping fluids of about 200 SSU viscosity nd with a vacuum of 10 inches. Displacement data is also ncluded.

The speed of the pump should be reduced when handling liquids of higher viscosity and the size of the line should be increased to prevent cavitation, loss of capacity and high power consumption.

These graphs and tables apply only to Series L pumps. Similar data for Model TR pumps is given on Page 15.

PUMP SPEED		3600 RPM						1800 RPM								1200 RPM								PUMP DISPLACEMENT	
OPERATING PRESSURE Lbs./Sq. In.		10		50		100		10		50		100		200		10		50		100		200		CU. IN. DISPLACEMENT	GAL. PER 100 REV.
		GPM	HP	GMP	HP	GPM	HP	GPM	HP	GPM	HP	GPM	HP	GPM	HP	GPM	HP	GPM	HP	GPM	HP	GPM	HP		
	30	.9	¼	.9	¼	.8	½	.5	¼	.4	¼	.4	¼	.4	¼	.3	¼	.3	¼	.2	¼	.2	¼		
P	00	2.1	½	2.0	½	1.9	½	1.0	¼	.9	¼	.9	¼	.8	¼	.6	¼	.6	¼	.5	¼	.5	¼	.0593	.0257
S	0	3.7	½	3.6	½	3.5	¾	1.8	¼	1.7	¼	1.7	¼	1.6	½	1.2	¼	1.1	¼	1.0	¼	.9	¼	.1291	.0560
	1	6.3	½	6.2	¾	6	1	3.2	¼	3.1	¼	2.9	½	2.7	¾	2.1	¼	2.0	¼	1.8	¼	1.6	½	.2371	.1025
	2	11.8	1	11.4	1	11	1½	6.2	¼	6.0	½	5.8	¾	5.3	1½	4.1	¼	3.9	½	3.7	½	3.2	1.0	.4142	.1790
																								.8000	.3460

DWG. ITEM NO. D SHEET 2 OF 4

TUTHILL PUMP - MOT

Close-Coupled Units

Tuthill manufactures a complete line of close-coupled pump-motor combinations, carefully designed to get a pump and motor into the smallest possible space. Their compactness can solve many tough design problems and simplify assembly operations . . . thus lowering production costs. Their reduced weight cuts shipping expense . . . and the elimination of components such as couplings, bases and adapters provides substantial savings.

A wide range of small pump-motor combinations can be formed by combining several of the Series L pumps described in this catalog with an appropriate motor. The basic pumps used in producing these combinations are the Models LE and LEV, described on Pages 6 and 7, which have 3-bolt flange mounting with short shafts and mounting hubs to particularly qualify them for close-coupling applications.

Tuthill has developed a special "Flexspline" coupling which incorporates two Delrin spline components assembled with a sintered iron retainer. Placed between the pump tang and motor slot, the new coupling provides excellent running alignment. By eliminating metal-to-metal contact it substantially reduces noise levels. The Flexspline coupling significantly increases pump and motor life through the elimination of fretting corrosion. It requires no lubrication.

Series LE and LEV pumps with shaft modification A may be coupled with a wide selection of motors. However, Tuthill keeps in stock motors which provide a wide range of characteristics and allow faster deliveries in most applications. These motors are indicated in the table below, together with their dimensions when combined with Model LE and LEV pumps.

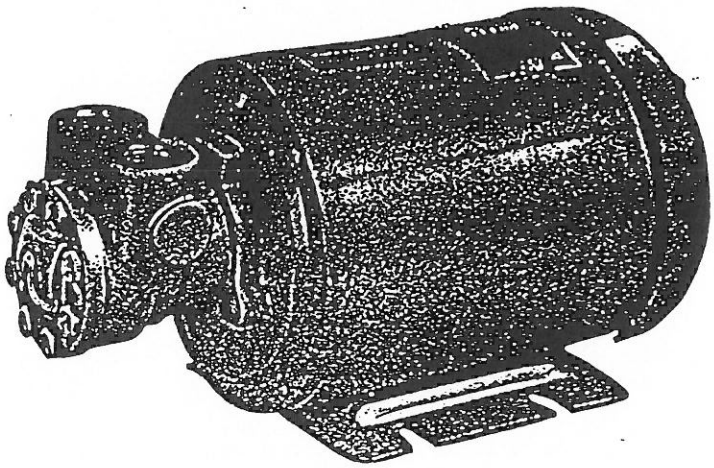

The pumps in these combinations may be supplied for higher discharge pressures to 500 psi. Similarly, motors may be furnished with almost any normal characteristics desired. For details on these options, consult the factory.

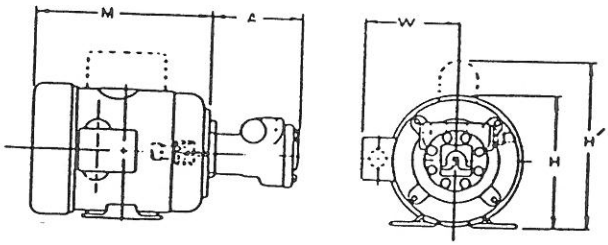

PUMP DIMENSIONS

MODEL		DIM A
30LE	30LEV	3¼
00LE	00LEV	3 3/16
0LE	0LEV	3 3/16
1LE	1LEV	3 11/16
2LE	2LEV	4 3/16

NOTE: All five sizes of Models LE and LEV pumps, with Modification "A" shaft end, fit on any of the motors shown below.

MOTOR AVAILABILITY CHART

MOTOR SIZE		CURRENT CHARACTERISTICS ALL 60 HZ SPEED, 1800 RPM			**MOTOR DIMENSIONS				
					M ENCLOSURES		H	H'	W
HP	FRAME	PHASE	HERTZ	VOLTAGE	TEFC	TENV			TEFC ONLY
⅛	42	1	60	115/230		9¼	4 21/32		
		3	60/50	208-220/440*		8¾	4 21/32		
1/16	42	1	60	115/230		9¼	4 21/32		
		3	60/50	208-220/440*		8¾	4 21/32		
¼	48	1	60	115/230	7 3/16			7⅜	4
		3	60/50	208-220/440*	7 3/16		6 5/16		4
⅓	48	1	60	115/230	7 11/16			7⅜	4
		3	60/50	208-220/440*	7 3/16		6 5/16		4
½	48	1	60	115/230	8 3/16			7⅜	4
		3	60/50	208-220/440*	7 11/16		6 5/16		4
	56	1	60	115/230	9 29/32			8¼	4⅞
		3	60/50	208-220/440*	9 1/32		6 13/16		4⅞
¾	56	1	60	115/230	10 5/32			8¼	4⅞
		3	60/50	208-220/440*	9 29/32		6 13/16		4⅞
1	56	3	60/50	208-220/440*	10 5/32		6 13/16		4⅞
1½	56	3	60/50	208-220/440*	11 13/32		6 13/16		4⅞

*OPTIONALLY RATED FOR 60 HZ 230/460 VOLTS. CONTACT FACTORY FOR 50 HZ OPTIONAL RATINGS.
**DIMENSIONS SHOWN ARE FOR REFERENCE ONLY. CERTIFIED DRAWINGS WILL BE FURNISHED ON REQUEST.

When to choose a vapor tension thermometer

Marsh Vapor Tension Thermometers offer the ideal solution for applications that require remote readings within the −40° to 240°F. (−40° to 115°C.) range.

A closed, vapor-filled Bourdon tube system, with a bulb at one end for temperature sensing, reacts to changes in temperature at the bulb by means of pressure changes in the fill medium. This direct pressure/temperature relationship makes possible highly accurate readings. Marsh Vapor Tension Thermometers are equipped with capillary tubing and a sensing bulb.

In addition to the remote reading/direct mounting difference between vapor tension and bimetal thermometers, the other major difference is the dial increment spacing. Vapor tension thermometers have nonlinear dials, with increasing increment size throughout the scale. As temperatures increase, the fill of the system exerts progressively greater pressure per degree. So the wider increments in the upper portion of the scale permit exceptionally close readings. Vapor tension thermometers also respond faster to temperature changes than bimetal thermometers do.

Moderately priced and available in eight standard ranges, Marsh Vapor Tension Thermometers feature a dual dial, displaying the selected range both in degrees Fahrenheit and Celsius (centigrade). Other features include the Marsh Recalibrator movement, a selection of case patterns to meet virtually any mounting requirement, and the adjustable Back/Bottom connection in the larger sizes.

Typical vapor tension thermometer applications include: food processing equipment, milk coolers, air conditioners and air ducts, hot and chilled systems, boilers, refrigeration equipment, pipelines, tanks, sterilizers, and industrial ovens...wherever remote readings are needed.

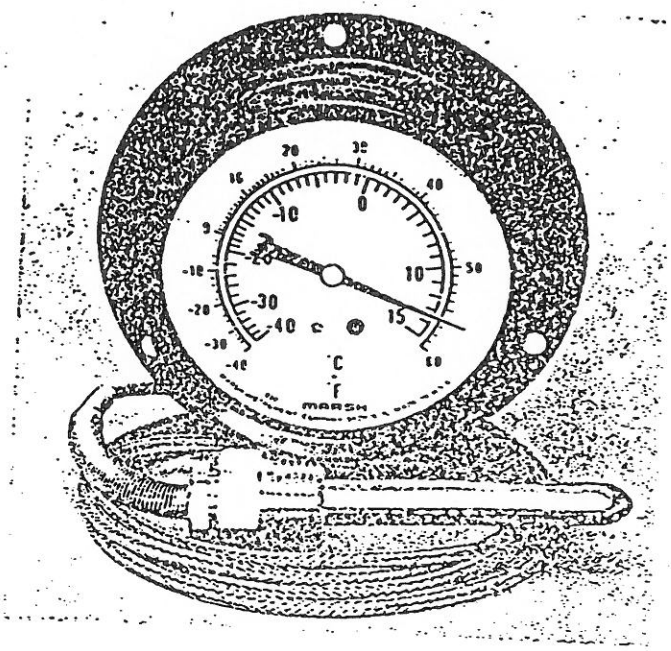

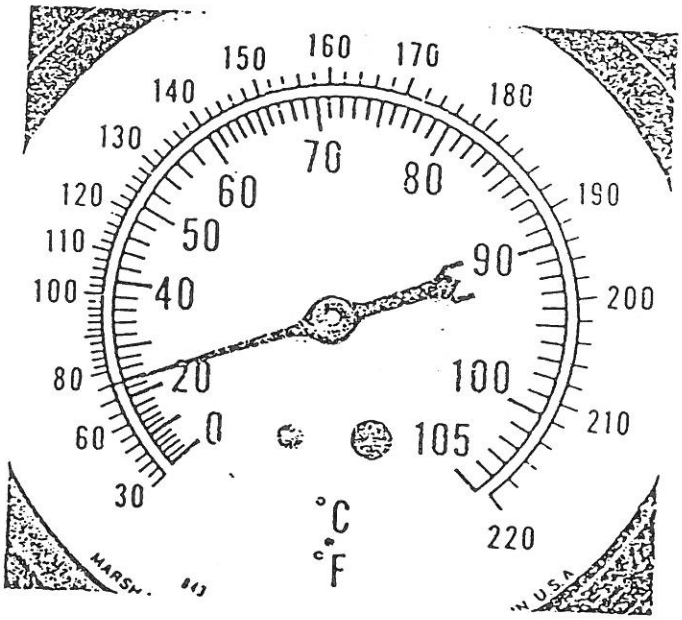

All Marsh products are subject to constant improvement. Therefore, material and dimensional specifications are subject to change without notice. Because of this, certain products in this catalog may differ slightly in appearance from actual production items.

Copyright © 1981, Marsh Instrument Co.

DWG. ITEM NO. T SHEET 1 OF 4

Case patterns and dimensions (All dimensions are in inches.)

FLUSH—Center-back connection.

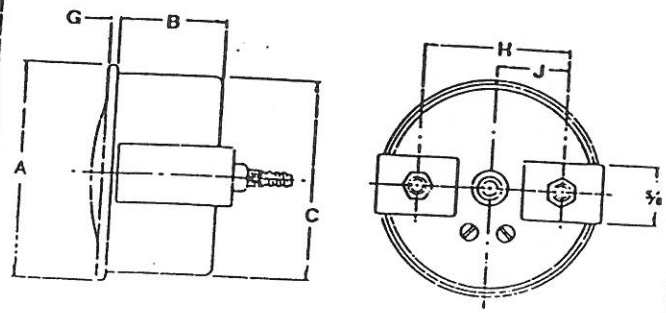

Size	A	B	C	G	H	J	E Panel Opening	Bulb		
								X	Y	Z
2	2 5/16	1 3/32	2 1/8	3/32	1 1/2	3/4	2 3/16	3	—	3/8
2 1/2	2 25/32	1 11/64	2 19/32	3/32	2 3/32	1 3/64	2 11/16	3 1/4	2 13/16	7/16
3 1/2	3 27/32	1 1/4	3 43/64	5/32	3 3/16	1 19/32	3 23/32	—	2 13/16	7/16

FRONT FLANGED—Center-back connection.

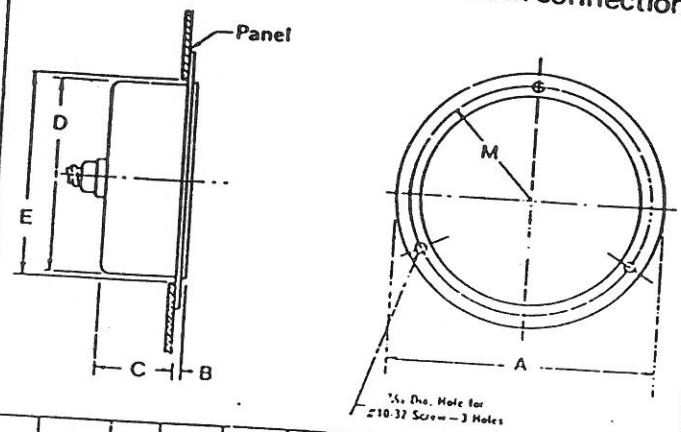

Size	A	B	C	D	E Panel Opening	M Radius	Bulb		
							X	Y	Z
2	2 15/16	3/32	1 3/32	2 1/8	2 3/16	1 5/16	3	—	3/8
2 1/2	3 15/32	3/32	1 11/64	2 5/8	2 11/16	1 9/16	3 1/4	2 13/16	7/16
3 1/2	4 3/4	9/64	1 1/4	3 43/64	3 13/16	2 1/16	—	2 13/16	7/16

BACK FLANGED—Adjustable back/bottom connection.

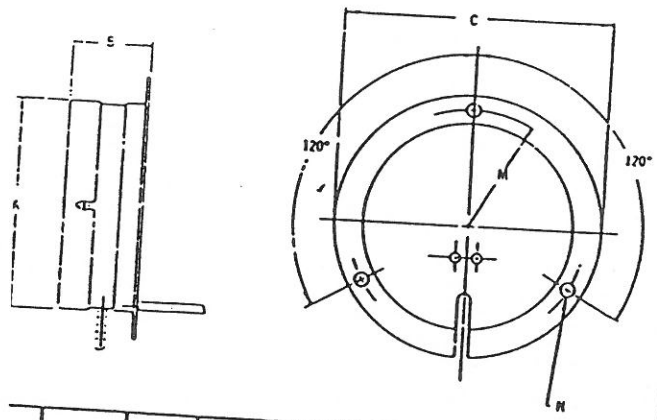

Size	A	B	C	M Radius	N Hole Dia.	Bulb	
						Y	Z
2 1/2	3 23/32	1 3/8	4 3/4	2 5/32	7/32	2 13/16	7/16
3 1/2	4 13/16	1 3/8	6 3/16	2 27/32	9/32	2 13/16	7/16

BULB

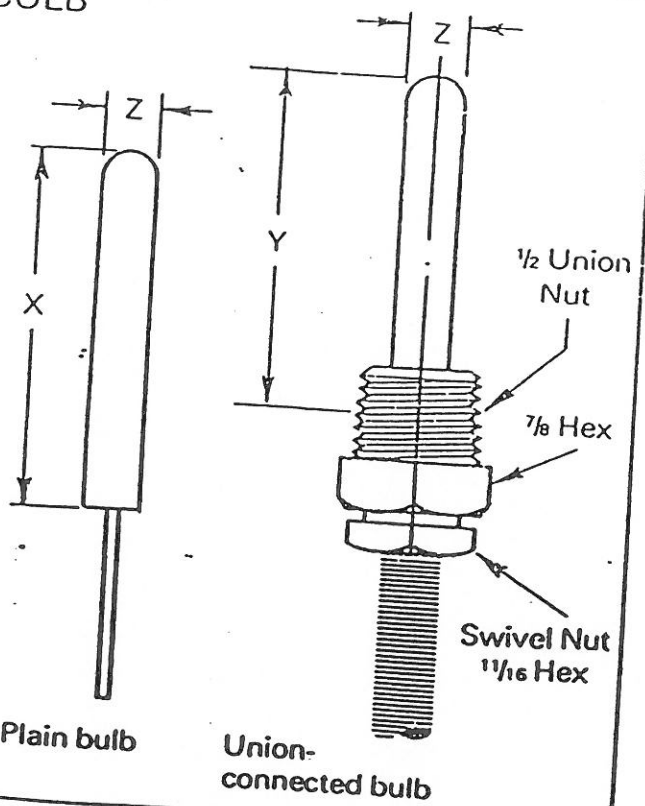

DWG ITEM NO. T SHEET 2 OF 4

Vapor Tension Thermometers

Selection and ordering guide

DIAL SIZE		2"		2½"				3½"				4½"
CASE PATTERN		Flush	Front Flanged	Flush		Front Flanged		Flush	Front Flanged	Back Flanged		Back Flanged
CONNECTION LOCATION		Back	Back	Back	Back	Back	Back	Back	Back	Back/ Bottom		Back/ Bottom
BULB TYPE		Plain	Plain	Plain	½" Union	Plain	½" Union	½" Union	½" Union	½" Union		½" Union
CAPILLARY LENGTH		6'	6'	6'	6'	6'	6'	6'	6'	6'	15'	6'
DUAL-DIAL RANGES °F.	°C.											
−40 to 60°	−40 to 15°	K1010	K1510	K2010	K2510	K3010	K3510	K4010	K4510	K5010	K5310	K5510
−40 to 120	−40 to 50	K1015	K1515	K2015	K2515	K3015	K3515	K4015	K4515	K5015	K5315	K5515
−20 to 120	−25 to 50	•	•	•	•	•	•	•	•	K5020	•	K5520
0 to 100	−20 to 40	•	•	•	•	•	•	•	•	K5025	K5325	K5525
20 to 120	−5 to 50	•	•	•	•	•	•	•	•	K5040	•	K5540
30 to 180	0 to 80	•	•	•	•	•	•	•	•	K5045	•	K5545
30 to 220	0 to 105	K1055	K1555	K2055	K2555	K3055	K3555	K4055	K4555	K5055	•	K5555
40 to 240	10 to 115	•	•	•	•	•	•	•	•	K5065	K5365	K5565

* Although this exact thermometer is not available as a stock item, your needs may be filled by ·y similar stock thermometer listed nearby. If, however, no stock thermometer can be d to fill your quantity needs, contact Marsh.

To assure prompt delivery, always order by product number. Catalog selection of stock items subject to change without notice.

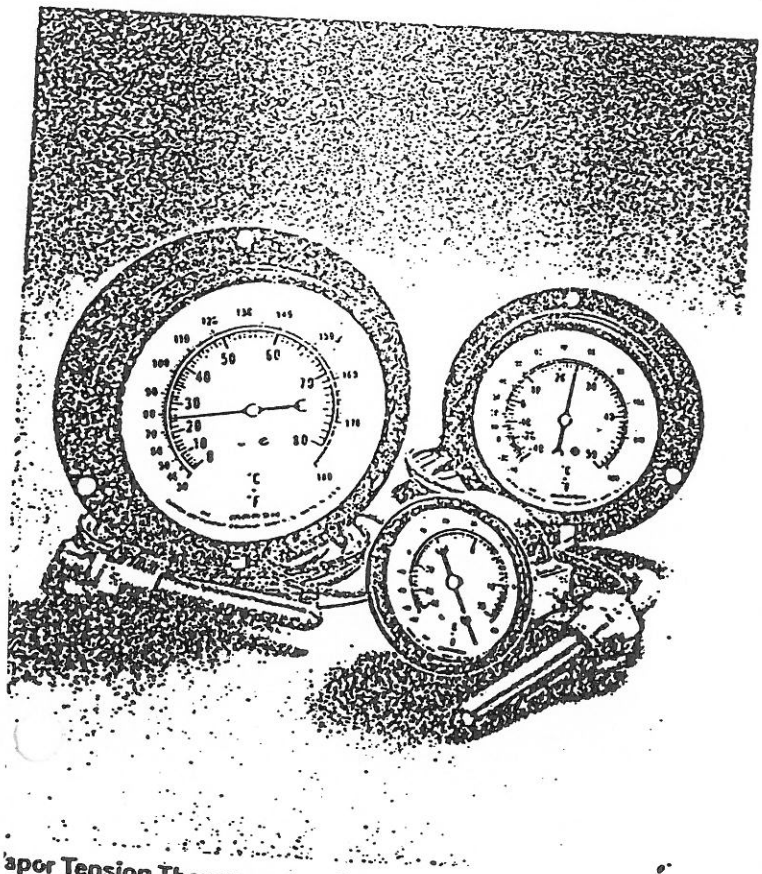

'apor Tension Thermometers (see chart above)

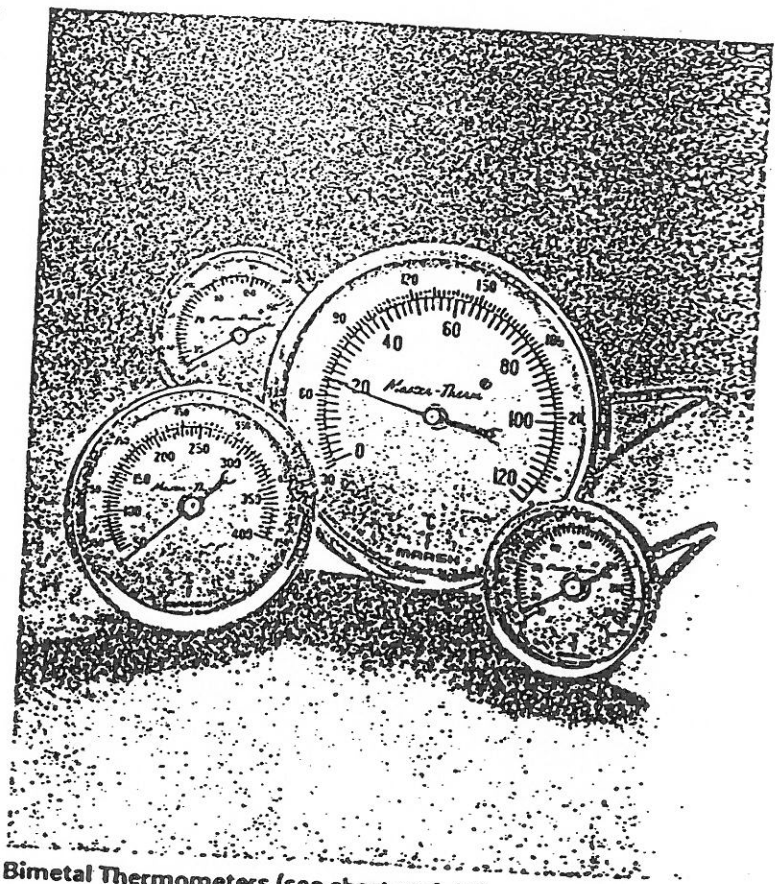

Bimetal Thermometers (see chart at right)

DWG. ITEM NO. T SHEET 2 OF 6

Vapor Tension Thermometers

Features/Options

Choice of case patterns and sizes

Marsh Vapor Tension Thermometers are offered in 2", 2½", 3½", and 4½" dial sizes. Back-flanged, front-flanged, and flush-mounting cases are available. See ordering chart on page 6 for specifics.

Rugged construction

Tube and movement—Marsh Vapor Tension Thermometers have drawn copper alloy Bourdon tubes, fabricated from seamless tubing. The motions of the Bourdon tube, caused by the internal pressures of the fill medium, are transferred to the pointer by the movement. All movements feature the Marsh Recalibrator, with Acculite™ sector and pinion.

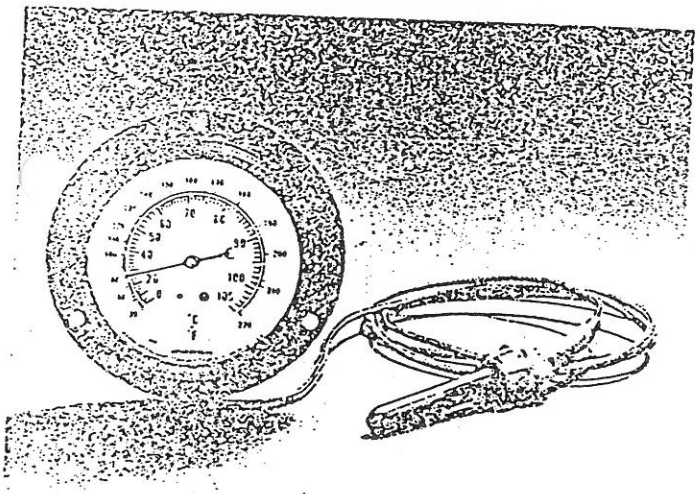

Capillary and bulb—Marsh Remote-Reading Thermometers with 2½", 3½", and 4½" dial sizes are standard with a 6 ft. length of flexible capillary tubing protected with a double sheath of braided copper wire. Thermometers with 2" dials are provided with bare 6 ft. copper capillary. All vapor tension thermometer capillaries are reinforced with stainless steel coiled armor at case and bulb. Some 3½" dial-size models are also available with 15 ft. capillary. Custom models offer lengths for most applications. Capillary joints are silver-brazed to provide lasting strength.

Thermometers are provided with union-connected brass bulb or plain brass bulb. See ordering chart for details.

Back/Bottom connection for adaptability

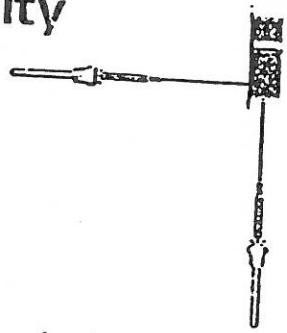

The Marsh Remote-Reading Back/Bottom Thermometer, available in 3½" and 4½" sizes, doubles the versatility at half the required inventory. A simple bend of the capillary tube in the horizontal direction makes it a back-mounted thermometer, suitable for flanged surface mounting. Move the capillary to the down position and the thermometer converts to a bottom-outlet model.

Recalibrator

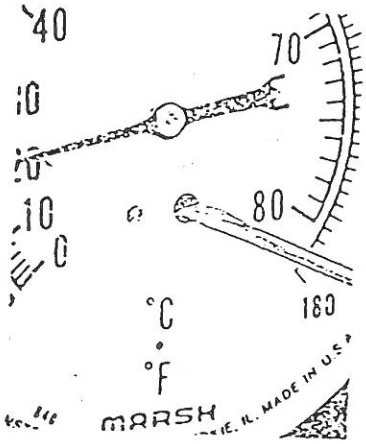

The Marsh Recalibrator is an exclusive feature with Marsh Vapor Tension Thermometers. One simple adjustment restores accuracy throughout the entire range of the dial by actually correcting the relationship of the Bourdon tube to the thermometer movement. Adjustments can be made by simply removing the ring and lens on the Marsh thermometer and, while comparing the dial reading with that of a laboratory test thermometer of known accuracy, turning the Recalibrator screw until the pointer indicates the same scale reading as the test thermometer.

Options available on special order

Every vapor tension thermometer in the selection charts is a standard product, available from stock. In addition to stock thermometers, Marsh offers several options which customers can special order. Available options include: dial variations such as name on dial; service printing; one, two or three-color additions to dial; other dual-scale dial, and other dial ranges; construction variations such as chrome-plated case and ring or ring only; plastic crystal; moistureproofing with weep hole; and silicone-treated movement. For prices and ordering information, contact your Marsh salesman or distributor.

DWG. ITEM NO. T SHEET 4 0'

Young fixed tube bundle heat exchangers

Young fixed tube bundle heat exchangers are available in two basic types, copper base alloy and stainless steel construction, to cover virtually any application. These heat exchangers are capable of satisfying various cooling requirements — from simple cooling of oil or water to the more complex cooling and heating requirements of exotic liquids or gases.

One of the many advantages Young heat exchangers offer is economy, both in initial cost and in operation. Savings are possible because stock models are constructed of standard components. Economy is possible because their multi-pass, close packed construction permits a reduction in cooling liquid requirements. In addition, the tube side is readily accessible for cleaning and inspection.

The use of inhibited admiralty tubing and zinc anodes in F and HF exchangers provides for some resistance to many, mildly corrosive fluids; however the use of 90-10 copper nickel tubes is recommended for improved resistance to corrosion from salt or brackish waters.

Bonnets provide smooth flow with minimum impact on the tube ends and tube sheets.

F HEAT EXCHANGER

F fixed tube bundle heat exchangers are nonferrous except the 10 SHELL DIAMETER CODE units which have steel shells. The tubes are high temperature bonded into the headers, allowing minimum tube pitch and permitting a greater number of tubes, resulting in maximum cooling surface area per unit volume of space.

Applications range from cooling of engine jacket water and lube oil, torque converter fluid and hydraulic fluid, to the heating or cooling of process fluids.

HF (high pressure) HEAT EXCHANGER

HF fixed tube bundle heat exchangers are specially designed for higher shell pressures. The HF line is identical to the F dimensionally, however, due to construction differences, operating pressures of 250 psi 1725 kPa on the shell side are possible.

HF exchangers are used with hydraulic fluids, process fluids and other similar applications where high pressures are encountered.

SSF (stainless steel) HEAT EXCHANGER

The shell and tube passages of SSF fixed tube bundle heat exchangers are constructed mainly of 316 stainless steel (18% chromium, 14% nickel, 3% molybdenum) for corrosion resistance and strength. They are used for heating and cooling of liquids and gases where a high degree of corrosion is encountered. Tubes are rolled into tube sheets by an electronically controlled process, making high-strength, leakproof joints.

The corrosion resistant properties of SSF fixed tube bundle heat exchangers make them suitable for applications in the chemical, food, pharmaceutical, refining and petro-chemical industries.

IMMEDIATE DELIVERY

To meet your immediate requirements, an adequate stock of heat exchangers is maintained in standard sizes. Young Radiator Representatives have access via computer terminals to current status of all stock heat exchangers.

Temperature control is provided on this packaged hydraulic power system by a Model HF-806-ER-4P heat exchanger.

Fig. 4

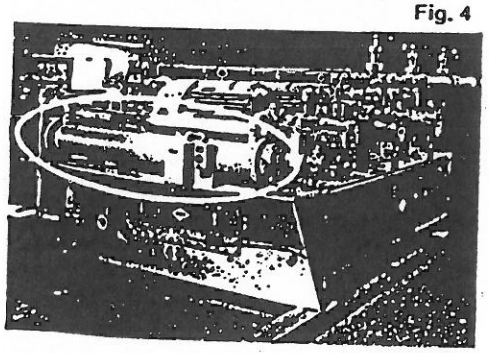

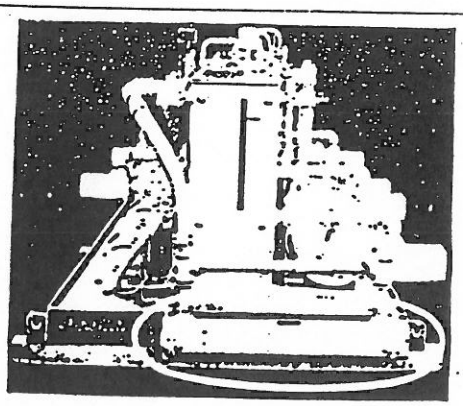

One Model F-604-AR-2P-CNTB heat exchanger cools the hydraulic drive winch unit used aboard a 1200 ton tuna purse seine vessel.

Fig. 5

A Model HF-806-AR-2P heat exchanger controls the temperature of the coolant for this eddy current drive.

Fig. 6

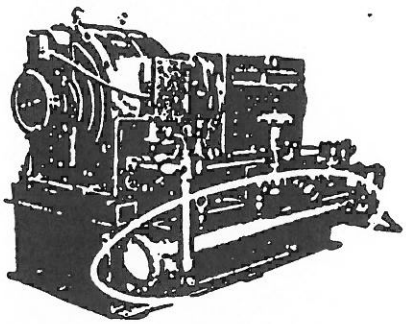

DWG. ITEM NO. HE 2 SHEET

F HF SSF basic information

Young

CONSTRUCTION FEATURES

STURDY BRACKET
Made of heavy gauge steel . . . adjustable for installation in various positions. Rotatable through 360 degrees.

SMOOTH FLOW BONNET
Distributes fluid to tubes with minimum turbulence. One, two or four pass interchangeability.

TUBES
On F and HF, tubes are high temperature bonded into tube sheets. On SSF and F-1000 series, tubes are rolled into tube sheets by electronic control.

END HUB
End hub is high quality forging and/or casting. Full-flow opening is designed for minimum pressure drop.

BAFFLES
Segmented baffles available in five spacings for maximum heat transfer with minimum fluid pressure drop.

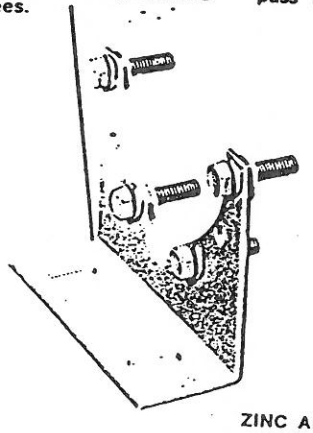

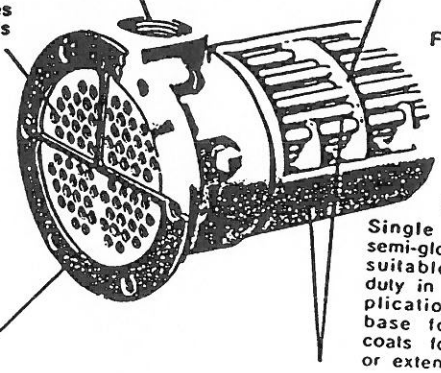

Fig. 7

FINISH
Single coat of grey, semi-gloss enamel paint suitable for outdoor duty in non-critical applications, and as a base for subsequent coats for severe duty or extended life.

ZINC ANODE
All F and HF heat exchangers are furnished with zinc anodes. These protect the tube metal through sacrificial corrosion. The protective value of the zinc decreases in time due to metal loss. It is recommended they be inspected on a regular basis and be replaced when required.

FULL-FLOW OPENINGS
Adequately sized for minimum pressure drop. Flexible connections are recommended when vibration is present.

FULL FACE GASKET
Asbestos-neoprene bonded gasket for maximum pressure and temperature.

SHELL AND TUBE BUNDLE ASSEMBLY
Baffles precision stamped to close tolerances. Clearances between baffles and tubes, baffles and shell are minimum—to obtain maximum heat transfer. Available in various size combinations to suit heat transfer requirements.

MODEL IDENTIFICATION

TYPE CODE	SHELL DIAMETER CODE	SHELL LENGTH CODE	BAFFLE SPACING CODE	TUBE DIAMETER CODE	PASS CODE	OPTION CODE
F = fixed tube bundle with 150 psi 1040 kPa shell HF = fixed tube bundle with 250 psi 1725 kPa shell SSF = fixed tube bundle with 300 psi 2070 kPa shell and stainless steel materials	2 = 2.12 in 3 = 3.62 in 5 = 5.12 in 6 = 6.12 in 8 = 8.25 in 10 = 10.75 in	01 = 9 in 02 = 18 in 03 = 27 in 04 = 36 in 05 = 45 in 06 = 54 in 08 = 72 in 10 = 90 in	H = 1.13 in D = 2.25 in E = 4.50 in A = 9.00 in T = 15 in (approx.)	Y = 0.250 in OD R = 0.375 in OD C = 0.625 in OD	1P = one pass 2P = two pass 4P = four pass	CN = 90-10 copper nickel tube CNT = 90-10 copper nickel tube and tube sheet B = brass bonnet CNB = 90-10 copper nickel tube and brass bonnet CNTB = 90-10 copper nickel tube, tube sheet and brass bonnet

NOTE A: F TYPE CODE not available in 2 and 8 SHELL DIAMETER CODE.
NOTE B: HF TYPE CODE not available in 10 SHELL DIAMETER CODE.
NOTE C: HF-2 TYPE CODE, SHELL DIAMETER CODE not available in 2P or 4P PASS CODE.
NOTE D: SSF-3-R TYPE CODE, SHELL DIAMETER CODE and TUBE DIAMETER CODE not available in 4P PASS CODE.
NOTE E: CN OPTION CODE available with 10 SHELL DIAMETER CODE only, all others are CNT OPTION CODE.

NOTE F: MODEL EXAMPLE —

F-604-AR-4P-CNT

- fixed tube bundle
- 6.12 in. shell diameter
- 36 in. nominal tube length
- 9.00 in. baffle spacing
- 0.375 in. tube
- four pass
- 90-10 copper nickel tube and tube sheet option

TABLE 2

METRIC CONVERSIONS

VARIABLE	PREFERRED SI UNIT	PREFERRED ABBREVIATION	ALTERNATE UNIT	ALTERNATE ABBREVIATION	CONVERSION MULTIPLIER**
length	metre	m	millimetre	mm	0.001
mass	kilogram	kg	gram	g	0.001
time	second	s	hour*	hr	0.0002777
heat energy	joule	J	calorie*	cal	4.187
force	newton	N	kilogram-force*	kgf	9.81
power	watt	W	joule/second	J/s	1.0
pressure	newton/metre²	N/m²	kilopascal	kPa	1000
volume flow rate	cubic metre/second	m³/s	litre*	l	0.001
volume flow rate	cubic centimetre/second	cm³/s	litre*	l	1000
acceleration	metre/second²	m/s²	—	—	—

*does not conform to SI metric standard
**to convert to preferred, multiply alternate by CONVERSION MULTIPLIER

EXPLANATION OF METRIC NOMENCLATURE

This catalog is dual dimensioned with the primary units being U. S. customary (bold face type) and the secondary dimensions being SI metric as defined in ASTM Designation: E380. Strict conformance to the SI metric standard produces some unfamiliar units in the tables and charts. Particular note should be made of the SI metric units of CAPACITY FACTOR (J/s-C = W/C) and SHIPPING WEIGHT (N). In the former case, the Joule (J) is the preferred unit of heat energy instead of the calorie and the preferred unit of weight or force is the Newton instead of the kilogram-force. Mass is related to force by the formula: force (N) = mass (g) x acceleration (9.8 m/s²). For reference, a tabulation of the metric units used in this catalog is provided as well as selected conversions to other metric units some of which do not conform to the SI standard.

DWG ITEM NO HF SHEET 2 OF 5

Young F HF SSF technical data

TABLE 3

TECHNICAL SPECIFICATIONS

MECHANICAL DESIGN DATA

RATINGS		TYPE CODE F		TYPE CODE HF		TYPE CODE SSF	
Maximum operating pressure psi kPa	Shell	150	1040	250	1725	300	2070
	Tube	150	1040	150	1040	150	1040
Test pressure psi kPa	Shell	250	1725	500	3450	500	3450
	Tube	250	1725	300	2070	300	2070
Maximum operating temperature F C	Shell	350	177	350	177	400	204
	Tube	350	177	350	177	400	204

MATERIAL DATA

COMPONENT		SHELL DIAMETER CODE	TYPE CODE F	TYPE CODE HF	TYPE CODE SSF
Shell		2 and 8	—	brass	316 stainless steel
		3, 5 and 6	brass	steel	
		10	steel	—	
Baffle		2, 3, 5, 6 and 8	brass		
		10	steel		
Tube		All	admiralty (Cu-Ni if OPTION CODE includes CN)		
Tube sheet		All	brass (Cu-Ni if OPTION CODE includes CNT)		
Bonnet		All	cast iron (cast brass if OPTION CODE includes B)		316 stainless steel casting
Hub		All	brass forging		
Pipe Plug	Shell	All	brass		316 stainless steel
	Bonnet	All	steel (brass if OPTION CODE includes B)		
Mounting Brkt		All	steel		steel

NOTE G: The differential between the shell fluid average temperature and tube fluid average temperature should not exceed 200F 93C for models through 06 SHELL LENGTH CODE and 150F 70C for longer models. For temperature differences exceeding these limits, heat exchangers should be furnished with expansion joints. To eliminate high pressure surges a pressure relief valve, accumulator or other suitable device should be used with a hydraulic system.

NOTE H: One pass heat exchangers should be used for steam service. Pressures to 75 psig 520 kPa (maximum) and temperatures to 350F 177C (maximum) may be used. Steam should be admitted through the tube side, with the exchanger mounted vertically to permit condensate to drain. A trap of proper type and size should be used. Horizontal installation can be accomplished if the heat exchanger is pitched at least 0.5 in/ft 4 cm/m of tube length.

PHYSICAL DATA

SHELL DIAMETER and LENGTH CODE	SHELL FLUID VOLUME gal l		TUBE FLUID VOLUME gal l		OUTSIDE TUBE SURFACE ft² m² TUBE DIA. CODE Y		OUTSIDE TUBE SURFACE ft² m² TUBE DIA. CODE R		SHIPPING WEIGHT lbs N	
201	0.10	0.38	0.10	0.38	1.52	0.14	—	—	7	31
202	0.15	0.57	0.15	0.57	3.04	0.28	—	—	10	44
301	0.20	0.76	0.15	0.57	3.74	0.33	2.66	0.24	17	75
302	0.50	1.9	0.30	1.1	7.47	0.69	5.31	0.48	25	110
303	0.70	2.6	0.40	1.5	11.1	1.03	7.97	0.73	30	130
502	1.0	3.8	0.50	1.9	18.1	1.68	11.2	1.04	40	180
503	1.5	5.7	0.75	2.8	27.1	2.52	16.8	1.56	50	220
504	2.0	7.6	1.0	3.8	36.1	3.35	22.4	2.08	60	270
602	1.2	4.5	0.90	3.4	26.9	2.50	17.5	1.63	55	240
603	1.9	7.2	1.3	4.9	40.2	3.73	26.2	2.43	70	310
604	2.5	9.5	1.6	6.1	53.6	4.98	34.9	3.24	90	400
606	3.7	14	2.4	9.1	80.8	7.51	52.7	4.90	130	580
608	5.0	19	3.1	12	108	10.0	70.2	6.52	170	750
802	2.4	9.1	1.8	6.8	—	—	34.1	3.17	155	690
803	3.6	14	2.4	9.1	—	—	50.6	4.70	180	800
804	4.7	18	3.1	12	—	—	67.1	6.23	205	910
805	5.8	22	3.7	14	—	—	83.6	7.77	230	1000
806	6.9	26	4.4	17	—	—	100	9.29	265	1200
808	9.1	34	5.6	21	—	—	133	12.4	325	1400
810	11	42	6.9	26	C		166	15.4	405	1900
1005	11	42	7.1	27	74.0	6.87	130	12.1	670	3000
1006	13	49	8.5	32	89.0	8.27	157	14.6	720	3200
1008	18	68	11	42	119	11.1	210	19.5	820	3600
1010	22	83	14	53	149	13.8	263	24.4	920	4100

TABLE 4

CORRECTION TO CAPACITY FACTOR REQUIRED

SHELL LIQUID TYPE	Tsi (temperature of shell liquid at inlet) F C: 120 49	150 66	200 93	250 121
SAE 5 oil	1.09	1.03	0.93	0.85
SAE 10 oil	1.19	1.10	1.00	0.92
SAE 20 oil	1.28	1.19	1.06	0.96
SAE 30 oil	1.32	1.27	1.09	0.99
SAE 40 oil	1.37	1.28	1.14	1.02
polyglycol	0.78	0.77	0.72	0.69
phosphate ester	0.67	0.65	0.62	0.60
water	0.59	0.58	0.57	0.57
50% ethylene glycol in water	0.65	0.64	0.62	0.60

TABLE 4A

OIL VISCOSITY
CENTIPOISES = CENTISTOKES X SPECIFIC GRAVITY
For SI Conversion: 1 kg/m-s = 1000 Centipoises

OIL TYPE	VISCOSITY @ 100 F 37.8 C SUS	Centistokes	Centipoise	VISCOSITY @ 210 F 98.9 C SUS	Centistokes	Centipoise
SAE 5	110	24	22	41	4.5	4.0
SAE 10	160	35	32	44	5.5	5.0
SAE 20	270	60	55	50	7.5	7.0
SAE 30	500	110	100	63	11	10
SAE 40	750	170	155	76	14.5	13
polyglycol	210	45	47	52	7.7	7.8
phosphate ester	250	56	66	43	5.1	5.8

TABLE 5

LMTD (Logarithmic Mean Temperature Difference) F or C

Tsi — Tto F or C	Tso — Tti F or C: 5	7	10	15	20	25	30	40	50	60	80	100	120
5	5.0	6.0	7.2	9.1	11	12	14	17	20	22	27	32	36
7	6.0	7.0	8.4	10	12	14	16	19	22	25	30	35	40
10	7.2	8.4	10	12	14	16	18	22	25	28	34	39	44
15	9.1	10	12	15	17	20	22	26	29	32	39	45	51
20	11	12	14	17	20	22	25	29	33	36	43	50	56
25	12	14	16	20	22	25	27	32	36	40	47	54	61
30	14	16	18	22	25	27	30	35	39	43	51	58	65
35	15	17	20	24	27	30	32	37	42	46	54	62	69
40	17	19	22	26	29	32	35	40	45	49	58	66	73
45	18	20	23	27	31	34	37	42	47	52	61	69	77
50	20	22	25	29	33	36	39	45	50	55	64	72	80
60	22	25	28	32	36	40	43	49	55	60	70	78	87
70	25	27	31	36	40	44	47	54	60	65	75	84	93
80	27	30	34	39	43	47	51	58	64	70	80	90	99
100	32	35	39	45	50	54	58	66	72	78	90	100	110
120	36	40	44	51	56	61	65	73	80	87	99	110	120

TABLE 6

LIQUID TYPE	LIQUID CONSTANT Btu/gal-F	J/l-C
SAE 5 oil	3.5	1800
SAE 10 oil	3.5	1800
SAE 20 oil	3.5	1800
SAE 30 oil	3.5	1800
SAE 40 oil	3.5	1800
polyglycol	7.2	3600
phosphate ester	3.9	2000
water	8.3	4200
50% ethylene glycol in water	7.3	3700

Young capacity factor and pressure loss

TABLE 9

NORMALLY STOCKED TYPE F	HF	SSF*	CNT**	BASE MODEL	CAPACITY FACTOR and RATED PRESSURE LOSS of SHELL LIQUID — CAPACITY FACTOR Btu/min-F J/s-C										RATED PRESSURE LOSS OF SHELL LIQUID psi	kPa
				Fs gpm	2.0		3.0		6.0		8.0		10			
	•	•	•	201-HY	2.9	92	3.6	114	3.9	123	4.2	133	4.4	139	4.5	32
	•	•		202-HY	5.8	183	7.2	228	7.9	250	8.3	262	8.7	275	9.1	63
				Fs gpm	3.7		5.5		9.0		12		15			
•	•	•	•	301-HY	6.3	199	7.7	243	8.7	275	9.4	297	9.9	313	2.6	18
•	•	•	•	302-HY	13	420	16	518	18	579	19	610	20	638	8.3	57
•		•		303-HY	20	635	25	777	27	863	30	935	31	980	14.2	98
				Fs gpm	3.7		5.5		9.0		12		15			
•				301-DY	6.9	218	8.4	265	9.3	294	9.9	313	11	332	3.0	21
•				302-DY	14	439	17	531	19	588	20	629	21	657	6.0	42
•				303-DY	21	657	25	796	28	882	30	942	31	989	9.3	62
				Fs gpm	3.7		5.5		9.0		12		15			
•		•		301-EY	6.4	202	7.3	231	8.0	253	8.5	269	8.9	281	0.5	4
•	•	•	•	302-EY	13	408	15	465	16	506	17	547	18	566	1.1	8
•				303-EY	20	619	22	695	24	758	26	815	27	844	1.6	11
				Fs gpm	5.5		9.0		15		20		25			
•	•			502-HY	33	1060	41	1310	46	1440	49	1540	51	1600	15.7	109
•				503-HY	51	1610	63	1990	69	2170	73	2300	76	2420	26.7	185
•				504-HY	69	2170	84	2670	93	2940	98	3090	104	3290	37.9	262
				Fs gpm	5.5		9.0		15		20		25			
•	•			502-DY	35	1120	43	1340	47	1480	50	1570	52	1650	11.3	78
•				503-DY	52	1650	64	2020	71	2230	75	2360	78	2450	17.1	118
•				504-DY	69	2190	85	2690	94	2970	100	3150	104	3290	22.8	157
				Fs gpm	5.5		9.0		15		20		25			
•	•	•	•	502-EY	32	1000	38	1190	41	1290	44	1400	46	1460	2.2	15
•		•	•	503-EY	48	1510	57	1790	61	1940	66	2070	69	2190	3.3	22
•		•		504-EY	64	2010	74	2340	82	2580	87	2760	92	2890	4.3	30
				Fs gpm	5.5		9.0		15		20		25			
				502-AY	32	1000	35	1100	38	1190	39	1240	41	1310	0.6	4.0
				503-AY	53	1670	57	1800	60	1910	63	2000	66	2090	2.0	13
				504-AY	63	2000	70	2210	75	2360	78	2480	82	2600	1.2	8
				Fs gpm	9.0		15		25		30		35			
•				602-HY	45	1410	56	1750	62	1960	67	2120	70	2220	8.8	61
				603-HY	70	2200	86	2710	97	3070	105	3290	110	3440	17.8	123
				604-HY	95	3000	115	3670	130	4110	140	4390	145	4610	27.2	188
				606-HY	140	4460	175	5590	195	6190	210	6570	—	—	40.6	280
				Fs gpm	9.0		15		25		30		35			
•				602-DY	45	1420	56	1760	65	2040	71	2260	75	2370	5.7	40
•				603-DY	70	2220	87	2750	100	3150	110	3410	115	3600	11.8	81
•				604-DY	94	2970	115	3670	135	4230	145	4580	155	4830	17.9	124
•				606-DY	145	4550	175	5560	205	6480	220	6950	230	7330	30.5	211
•				608-DY	190	—	235	7490	275	8630	300	9480	—	—	43.3	299
				Fs gpm	9.0		15		25		30		35			
•				602-EY	50	1560	61	1930	67	2110	72	2260	75	2360	5.0	34
•			•	603-EY	74	2330	92	2910	100	3220	110	3440	110	3540	7.4	50
•				604-EY	99	3110	120	3820	135	4230	145	4520	150	4770	9.9	68
•				606-EY	150	4710	180	5750	200	6380	215	6760	225	7110	14.8	102
•				608-EY	196	6190	240	7650	270	8560	285	9010	305	9610	19.7	136
				Fs gpm	9.0		15		25		30		35			
•				602-AY	49	1550	56	1760	61	1920	64	2020	68	2130	1.2	8
•				603-AY	81	2550	92	2900	97	3070	105	3250	110	3440	4.0	27
•				604-AY	98	3100	110	3540	120	3860	130	4040	135	4230	2.4	16
•				606-AY	150	4680	165	5280	185	5810	195	6160	200	6350	3.6	25
•				608-AY	195	6190	225	7080	240	7620	255	8090	270	8470	4.8	33
				Fs gpm	3.7		5.5		9.0		12		15			
•	•			301-HR	3.7	117	5.0	158	5.8	183	6.3	199	6.6	207	1.6	11
•				302-HR	7.8	246	11	332	12	379	13	417	14	433	5.0	35
•				303-HR	12	373	16	515	19	585	20	626	21	664	8.6	60
				Fs gpm	3.7		5.5		9.0		12		15			
•				301-DR	5.5	174	6.1	193	6.5	205	7.0	221	7.1	224	2.7	19
•				302-DR	11	348	12	386	13	414	14	436	14	452	5.5	38
•				303-DR	16	518	19	588	20	619	21	651	22	679	8.2	57
				Fs gpm	3.7		5.5		9.0		12		15			
•				301-ER	4.5	142	5.0	158	5.5	174	5.8	183	6.2	196	0.4	3
•				302-ER	8.8	278	10	319	11	348	12	370	12	389	0.8	6
•				303-ER	13	417	15	474	16	518	16	553	18	578	1.2	8
				Fs gpm	5.5		9.0		15		20		25			
•		•		502-HR	18	581	23	736	26	806	28	872	29	910	7.9	55
•				503-HR	28	894	35	1110	39	1230	42	1320	44	1390	13.4	93
•				504-HR	38	1210	47	1490	53	1670	56	1760	59	1850	19.1	132
				Fs gpm	5.5		9.0		15		20		25			
•				502-DR	20	616	25	787	28	866	29	926	31	970	7.5	52
•				503-DR	29	913	37	1170	42	1320	44	1390	46	1460	11.3	78
•				504-DR	39	1220	490	1548	55	1740	59	1850	62	1940	15.1	104
				Fs gpm	5.5		9.0		15		20		25			
•		•	•	502-ER	15		25		35		45		55		1.6	11
•				503-ER	19	594	22	705	24	771	26	825	27	866	2.5	17
•				504-ER	29	904	33	1060	37	1150	39	1240	41	1300	3.2	22
					38	1190	44	1400	49	1550	53	1660	55	1720		

*SSF 4P PASS CODE not available from stock.

**CNT OPTION CODE stocked for type F units except for 2 and 8 SHELL DIAMETER CODES which are stocked for type HF. Stocked 10 SHELL DIAMETER CODE are CN OPTION CODE. CNT OPTION CODE not available.

DWG. ITEM NO HF

SHEET 1 OF 5

Young F HF SSF dimensions

2 SHELL DIA. CODE
10 PASS CODE

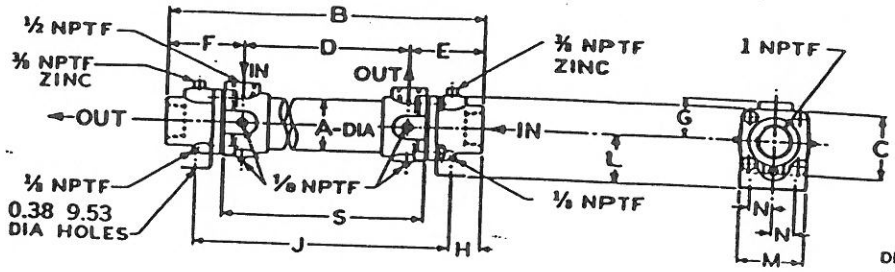

Fig. 8

DM-8844
Sht 11 of 11

SHELL DIA. CODE
PASS CODE

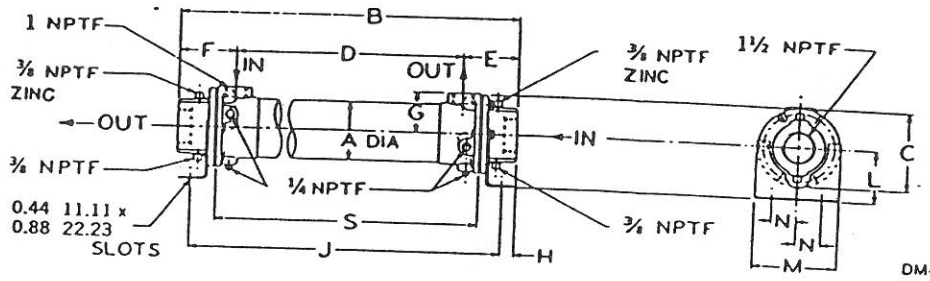

Fig. 9

DM-8844
Sht 1 of 11

SHELL DIA. CODE
PASS CODE

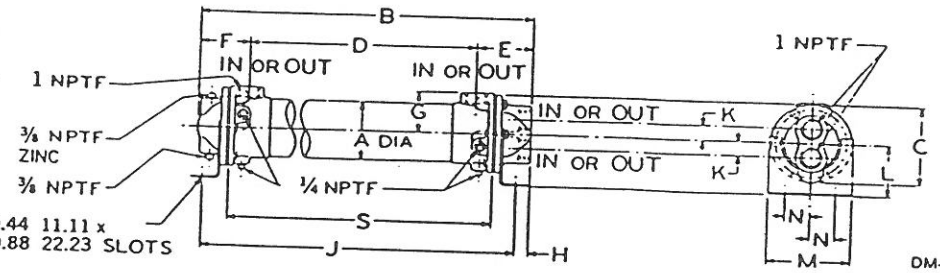

Fig. 10

DM-8844
Sht 4 of 11

SHELL DIA. CODE
PASS CODE

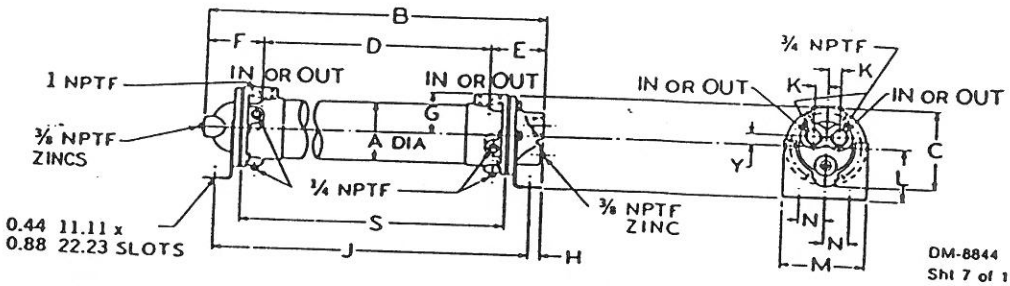

Fig. 11

DM-8844
Sht 7 of 11

SHELL DIAMETER & SHELL LENGTH CODE	ALL UNITS									ONE PASS			
	A	C	D	G	J	L	M	N	S	H	B	E	F
201	2.12 53.8	2.50 63.5	7.62 193.5	1.56 39.6	11.06 280.9	1.88 47.7	2.50 63.5	.88 22.3	9.00 228.6	1.16 29.4	13.38 339.8	2.88 73.1	2.88 73.1
202	2.12 53.8	2.50 63.5	16.62 422.1	1.56 39.6	20.06 509.5	1.88 47.7	2.50 63.5	.88 22.3	18.00 457.2	1.16 29.4	22.38 568.4	2.88 73.1	2.88 73.1
301	3.62 91.9	4.88 123.9	7.00 177.8	2.50 63.5	12.38 314.4	3.25 82.5	5.00 127.0	1.50 38.1	9.25 234.9	0.81 20.5	13.88 352.5	3.44 87.3	3.44 87.3
302	3.62 91.9	4.88 123.9	16.00 406.4	2.50 63.5	21.38 543.0	3.25 82.5	5.00 127.0	1.50 38.1	18.25 463.5	0.81 20.5	22.88 581.1	3.44 87.3	3.44 87.3
303	3.62 91.9	4.88 123.9	25.00 635.0	2.50 63.5	30.38 771.6	3.25 82.5	5.00 127.0	1.50 38.1	27.25 692.1	0.81 20.5	31.88 809.7	3.44 87.3	3.44 87.3
502	5.12 130.0	6.50 165.1	15.50 393.7	3.31 84.0	21.62 549.1	4.00 101.6	6.25 158.7	2.00 50.8	18.50 469.9	1.06 26.9	23.62 599.9	4.06 103.1	4.06 103.1
503	5.12 130.0	6.50 165.1	24.50 622.3	3.31 84.0	30.62 777.7	4.00 101.6	6.25 158.7	2.00 50.8	27.50 698.5	1.06 26.9	32.62 828.5	4.06 103.1	4.06 103.1
504	5.12 130.0	6.50 165.1	33.50 850.9	3.31 84.0	39.62 1006.3	4.00 101.6	6.25 158.7	2.00 50.8	36.50 927.1	1.06 26.9	41.62 1057.1	4.06 103.1	4.06 103.1
602	6.12 155.4	7.50 190.5	14.62 371.3	3.81 96.7	21.50 546.1	4.75 120.6	7.25 184.1	2.50 63.5	18.38 466.8	1.31 33.2	24.00 609.6	4.69 119.1	4.69 119.1
603	6.12 155.4	7.50 190.5	23.50 596.9	3.81 96.7	30.38 771.6	4.75 120.6	7.25 184.1	2.50 63.5	27.25 692.1	1.31 33.2	32.88 835.1	4.69 119.1	4.69 119.1
604	6.12 155.4	7.50 190.5	32.38 822.4	3.81 96.7	39.25 996.9	4.75 120.6	7.25 184.1	2.50 63.5	36.12 917.4	1.31 33.2	41.76 1060.7	4.69 119.1	4.69 119.1
606	6.12 155.4	7.50 190.5	50.50 1282.7	3.81 96.7	57.38 1457.4	4.75 120.6	7.25 184.1	2.50 63.5	54.25 1377.9	1.31 33.2	59.88 1520.9	4.69 119.1	4.69 119.1
608	6.12 155.4	7.50 190.5	68.38 1736.8	3.81 96.7	75.25 1911.3	4.75 120.6	7.25 184.1	2.50 63.5	72.12 1831.8	1.31 33.2	77.76 1975.1	4.69 119.1	4.69 119.1

(All dimensions are inches millimetres)

(Certified drawings are available upon request)

DWG. ITEM

CFCA Can-Absorb™ Water Removal Spin-On Filters

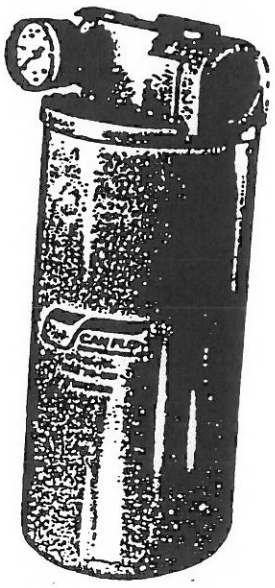

Technical Data

Can Flo CAN-ABSORB™ (CFCA) is a super absorbent chemical that locks in twenty-five times its weight of water. CAN-ABSORB™ used in a combination with filter medias absorbs water and filters solids from the fuel to assure a supply of clean fuel. When water is absorbed, the CAN-ABSORB™ swells and, depending on the pumping system, will result in differential pressure increase and/or a drop in flow rate, signaling the operator that the cartridge must be changed. When the CAN-ABSORB™ is saturated with water it swells shut preventing any further flow until the cartridge is changed. The CAN-ABSORB™ filter is designed for use with all types of liquid hydrocarbon fuel, including gasohol, with performance unaffected by fuel additives and surfactants.

Water Holding Capacity

CAN-ABSORB™ removes free and emulsified water. Water holding capacity and rate of removal depend partly on fluid type, additives, viscosity and flow rates. Higher viscosities tend to decrease water holding capacity and are inversely related to flow rate where lower flows yield higher water capacities. Typical water holding capacities are 0.65 pints at 5 gpm for model RCE 30; 1.05 pints at 7 gpm for model RCE 40, and 2.5 pints at 20 gpm for model RCE 70. Lower water holding capacities can be expected at higher flow rates.

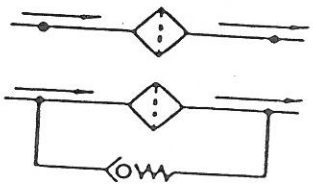

Try it and convince yourself

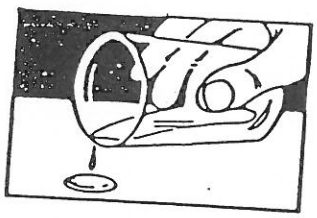

1. Carefully pour a small pool of water about the size of a quarter onto a smooth surface.

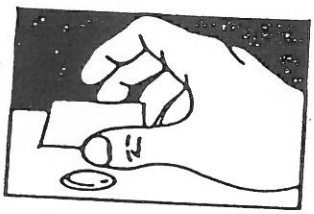

2. Place the Can-Absorb™ directly on top of the water.

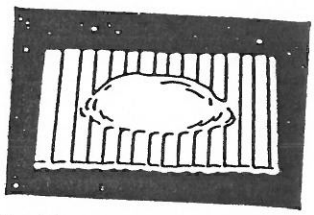

3. Note how the Can-Absorb™ swells as it totally absorbs and "locks-in" the water.

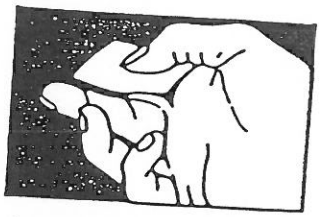

4. Place the Can-Absorb™ between thumb and forefinger and squeeze as hard as you wish. No free water is liberated.

Flow vs Pressure Drop at oil viscosity of 150 SUS (28 centistokes)

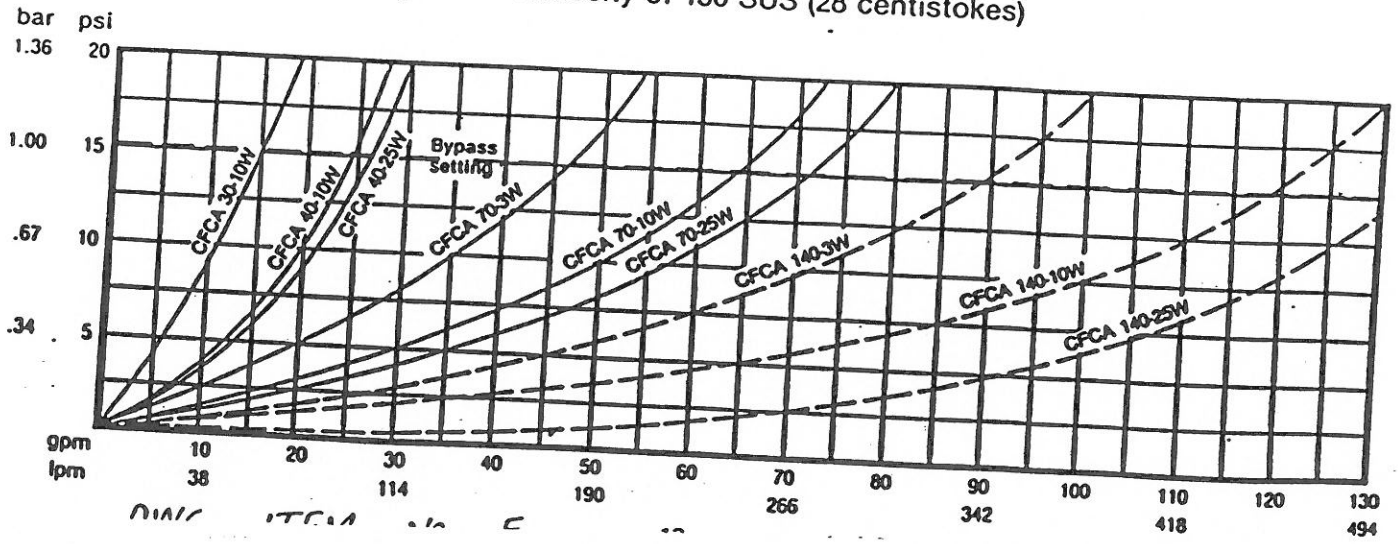

Dimensions

Port Sizes: See "Ordering Example."

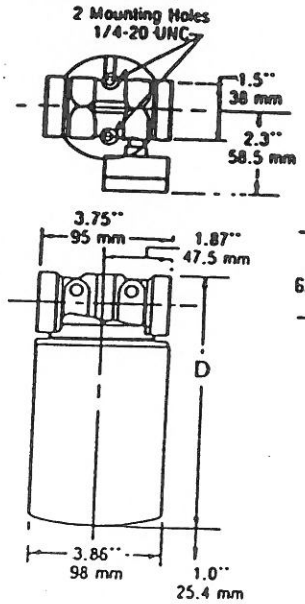

Models CFCA-30, 40

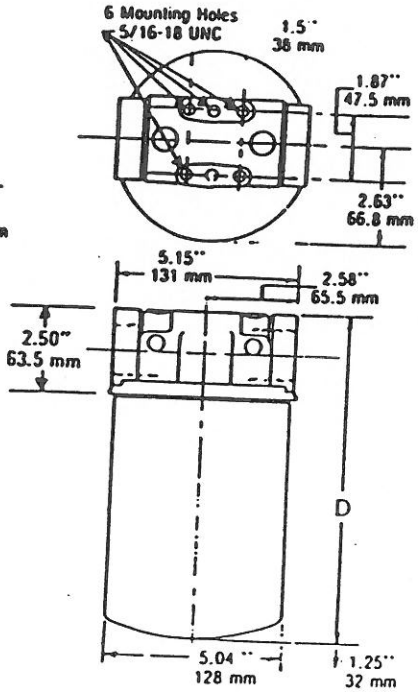

Model CFCA-70

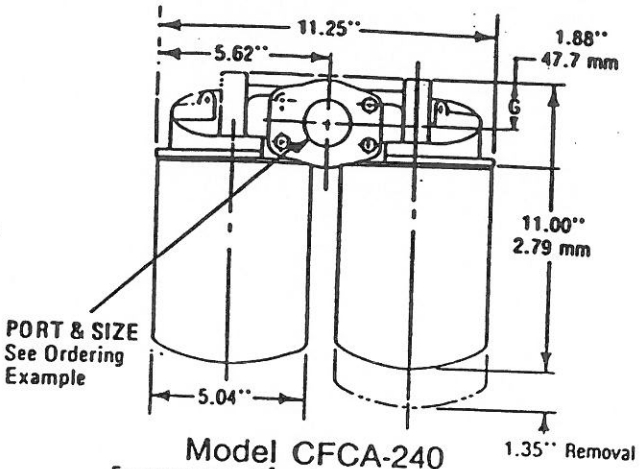

Model CFCA-240

For complete dimensions see CFRS - 100

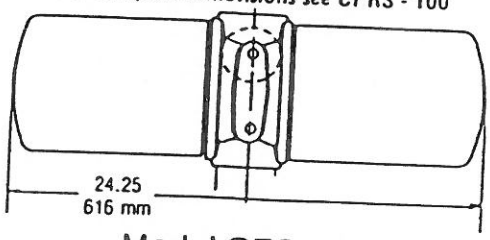

Model CFCA-140

For complete dimensions see CFRS-100

Dimension D			
Model	30	40	70
in mm	7.38 187	10.58 266.7	13.0 330.2

Weights			
Model	30	40	70
lbs kg	2.8 1.27	3.0 1.36	6.0 2.73

Ordering Example: CFCA 40 — 16S — 3W — A — DR — M — NB

Can Flo Designation
CFCA - Return Line (15 psi bypass)
CFCS - Suction Line (3 psi bypass)

Model
30
40
70
140
240

Port Size†

Models 30, 40
8N - 1/2" NPT
8S - 3/4" SAE
12N - 3/4" NPT
12S - 1-1/16" SAE
16N - 1" NPT
16S - 1-5/16" SAE

Model 70
20N - 1-1/4" NPT
20S - 1-5/8" SAE

Model 140
24N - 1-1/2" NPT
24S - 1-7/8" SAE

Model 240
24F - 1-1/2" SAE 4-bolt flange
24N - 1-1/2" NPT
24S - 1-7/8" SAE

Micron Rating
*3W - 3 mic
10W - 10 mic
25W - 25 mic

*Models 70, 140 & 240 only

Indicator Port
X - None
†A - 2 x 1/8" NPT
B - 4 x 1/8" NPT
†C - 2 x 1/4" NPT
D - 4 x 1/4" NPT

†CFCA Inlet side
CFCS Outlet side

1/4" NPT not available on models 30, 40, 140

Indicator
X - None
D - Dial 0/100 psi gage CFCA only
Dial 0/30 Hg vacuum gage CFCS only
E - Electrical presure or vacuum switch

Indicator Location (Viewing inlet port)
R - Right side
L - Left side

Fluid Type
M - Mineral (Buna)
P - Phosphate ester (Viton)

Bypass
NB - No bypass
Leave blank if bypass required

Replacement Element Ordering Example:

RCE — 70 — 10W

Can Flo Identity
RCE - Replacement water absorbing element

Model
30
40
70

Micron Rating
*3W - 3 mic cellulose
10W - 10 mic cellulose
25W - 25 mic cellulose

*Models 70, 140 and 240 only

Approximate Element Area

Filter Model	Area			Capacity
30	225 1451	70	in² mm²	675 4354
140	450 2903	140	in² mm²	1350 8708

spirax sarco

T44 Cooling Control

Available type

T 44 Normally closed, opens with a rise in temperature for cooling, single seat packless gland. Adjustment needle bypass.

Temperature range

60°F to 110°F	*15°C to 43°C*
85°F to 135°F	*29°C to 57°C*
110°F to 160°F	*43°C to 71°C*
135°F to 185°F	*57°C to 85°C*

Any special 50°F/28°C range is available between 40°F and 210°F, *4°C* and *99°C*.

Sizes and pipe connections

3/8, 1/2, 3/4 and 1. Screwed NPT, API or BSP.

Materials

No	Part	Material
1	Body	Brass
2	Cap	Brass
3	Valve Head	Stainless Steel
4	Valve Seat	Stainless Steel
5	Adjustment Screw	Brass
6	Adjustment Nut	Brass
7	'O' Ring Seal	
8	Adjustment Stem	Stainless Steel
9	Head Assembly Tubing	Stainless Steel
10	Head Assembly Insert	Brass
11	Return Spring	Stainless Steel
12	Tank Union	Brass
13	Valve Head Stem	Stainless Steel
14	Thermostat Assembly	Copper and Brass
15	Bypass Valve	Stainless Steel
16	Packing Nut	Brass
17	Packing	Asbestos with Nitrite Binder and Zinc

Dimensions (approximate) in inches & millimeters

Size	A	B	C	D	E	F	Weight
3/8	3.25 83	3.0 76	1.62 41	10.3 262	9.9 251	0.87 22.2	3.5 lb 1.6 kg
1/2	3.25 83	3.0 76	1.62 41	10.3 262	9.9 251	0.87 22.2	3.5 lb 1.6 kg
3/4	3.75 95	3.06 78	1.62 41	12.75 324	12.3 313	0.87 22.2	4.0 lb 1.8 kg
1	3.75 95	3.06 78	1.62 41	12.75 324	12.3 313	0.87 22.2	4.0 lb 1.8 kg

Temperature adjustment

If it is necessary to make an adjustment, loosen nut (6) and turn the adjustment screw (5) with a screwdriver in the direction indicated on the cap. By turning clockwise it will increase the temperature setting and counterclockwise for lowering the setting.

Optional extras

Separable wells: - to protect the sensor against harmful liquids. Are available in stainless steel, type 304 or 316.

Installation

The control should be installed vertically in the piping with the sensor below the valve in the liquid being controlled. If a separable well is fitted, the separable well should be installed into the liquid and the sensor screwed into the separable well.

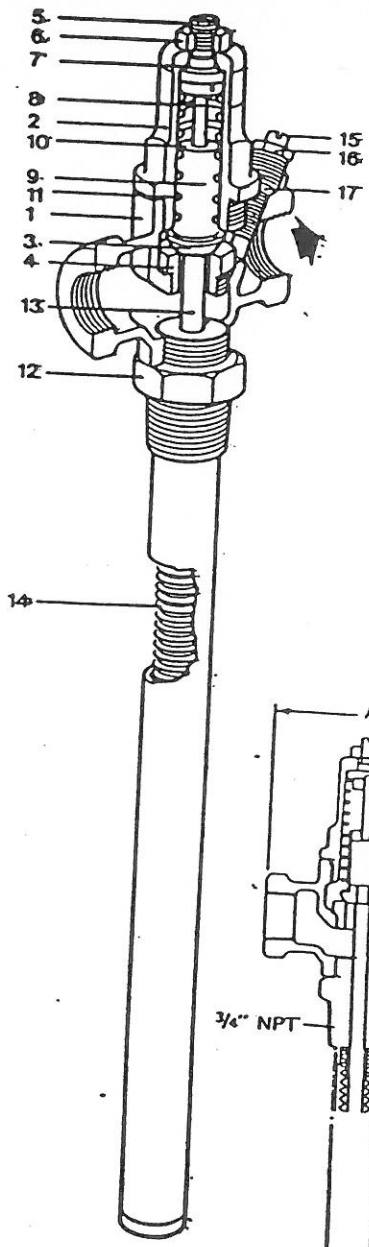

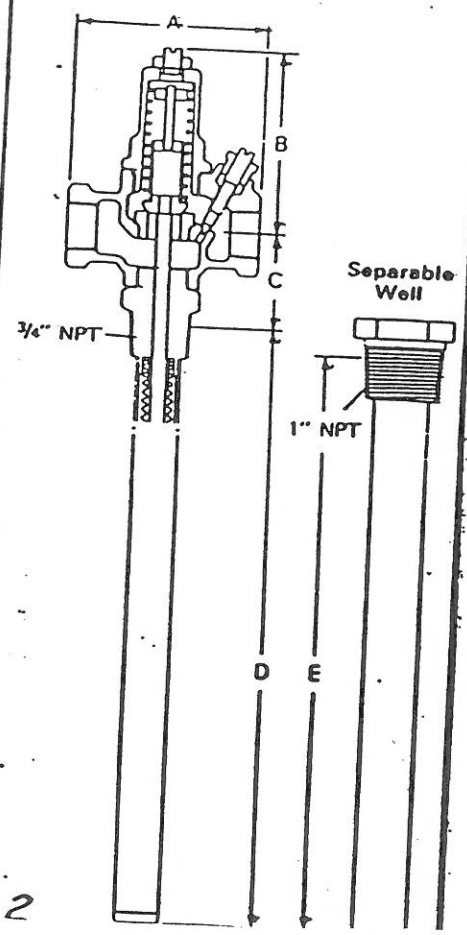

DWG. ITEM NO. TR SHEET 1 OF 2

Type T 44 Cooling Controls

Typical specification

Control valve shall be brass body with stainless steel and brass internals, single seated with screwed pipe connections. Valve is normally closed which opens on temperature rise for cooling. This combined unit is self acting and provides proportional control accuracy. The brass temperature control system shall be hydraulically operated, incorporate packless glands. Temperature setting shall be adjustable while control is in service. When required, sensor bulb shall be mounted in a separable well to allow for easy removal from service.

Capacity

The capacity of a water valve depends on (A) The amount of valve opening due to the rise in temperature above the point at which the valve is set to close; (B) The pressure drop across the valve. Within these allowable limits select temperature control, type and size which has the adequate GPM flow rate.

Capacities, GPM Water

Pressure Drop	3/8 & 1/2				3/4 & 1			
	Temperature Change of							
	5°F	10°F	15°F	20°F	5°F	10°F	15°F	20°F
10 psi	3.3	5.7	8.0	9.4	4.6	7.9	11.4	13.7
20 psi	4.4	8.3	11.4	13.5	6.8	11.8	16.5	20.0
30 psi	5.1	10.0	13.7	16.4	8.6	14.8	20.6	25.5
40 psi	5.5	11.4	15.4	18.6	10.0	17.2	24.0	30.0

Spare parts

The spare parts available are shown in heavy outline.
Parts drawn in broken line are not supplied as spares.

AVAILABLE SPARE	
Adjustment Stem Assembly	
'O' Ring Seal	A,B,C
Return Spring	C
Bypass Valve	D
Bypass Packing	E,F
Valve Head and Stem Assembly	F
Valve Seat	G
Thermostat Assembly (state temperature range)	H
	J

How to Order

Always order spares by using the description given in the column headed Available Spare stating the size, type and temperature range.

Example: 1 — Valve Head and Stem Assembly for 1/2 Spirax Sarco T 44 Cooling Control

General Repair and Maintenance

Isolate the control. Unscrew cap and lift out return spring (D). With the screwdriver in the slot of Adjustment screw, unscrew the valve head and stem assembly (G), lift out of body.
Remove dirt and all deposits, badly worn parts should be replaced.
Caution: Do not damage seating surfaces.

To Reassemble

Insert valve head and stem assembly (G) in place.
Replace return spring (D).
Loosen locknut (A) and place cap with adjustment stem assembly (B) in place over the return spring.
Press cap and associated parts downwards compressing spring (D), at the same time turning adjustment screw with the screwdriver so that the adjustment key engages the slot in the adjustment head. Push cap downwards until it engages the threads in the body. Tighten securely.
Turn adjustment screw clockwise three turns to engage threads at the bottom of the stem. Then reset control to desired temperature and tighten locknut (A).

To Replace the Control System

Loosen locknut (A) and by turning adjustment screw in the counterclockwise direction unscrew valve head and stem assembly (G), from the control system. Using a wrench on union of control system (J) unscrew the control system from the valve body.
Slide new control system in place over valve head and stem assembly and tighten union securely in place in body.
Re-adjust the control to the temperature required and tighten locknut (A).

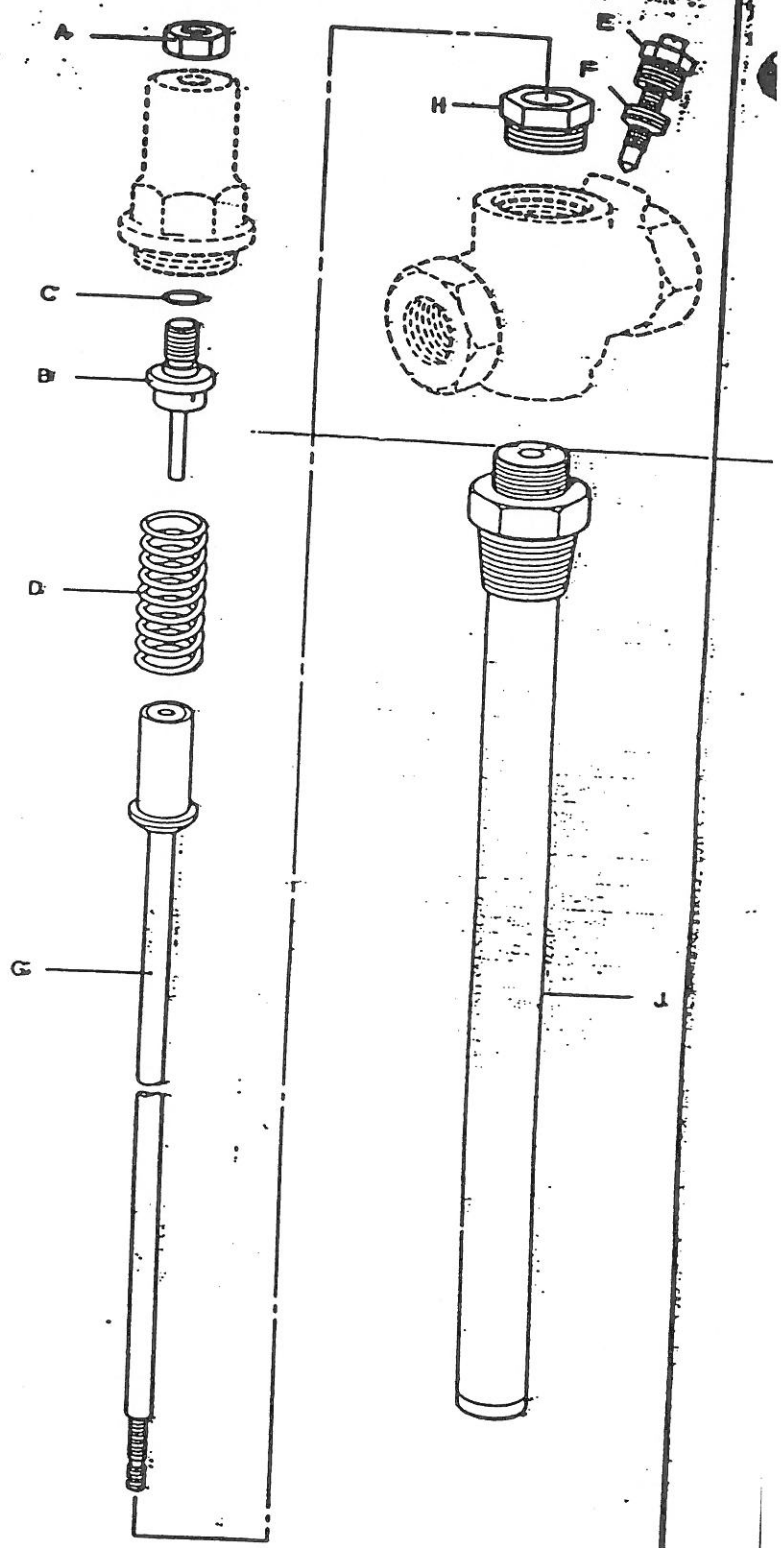

DWG. ITEM NO. TR SHEET 2 OF 2

Valves

Operation 1/4" to 3" N.P.T.

ASCO® Red-Hat
BULLETINS
8210, 8211

General Description

These valves provide long trouble-free life on general service applications. A broad selection of body materials and operating pressures is available.

Applications

These dependable 2 way valves are used in:

- pumps
- spraying
- cooling
- air dryers
- pollution controls
- laundry equipment
- irrigation
- compressors
- dishwashers
- water treatment

Special valves available for: • dry air-gas • continuous cycling • exceptionally long life • heavy-duty operation • clickless and quiet (no AC hum) operation. Refer to Long Life Construction.

Specifications

Operation: Two types available:

(a) Normally Closed — valves closed when de-energized, open when energized.

(b) Normally Open — valves closed when energized, open when de-energized.

Valve Parts in Contact with Fluid:

Body — Brass, Stainless Steel (Series 300), Nylon or Bronze, as listed.

Seals and Discs — Buna "N," Teflon* or Ethylene Propylene, as listed.

Disc Holder — Nylon, as listed.

Core Tube — 305 s.s.

Core and Plugnut — 430F s.s.

Springs — 302 s.s.

Shading Coil — Copper (brass and nylon body); Silver (stainless steel body).

Solenoid Enclosures: Two types available:

(a) Type 1 — General Purpose.

(b) Types 4 and 7 (C and D) — Combination Watertight and Explosion-Proof. Also meets Types 3 and 9 (E, F and G). Refer to Engineering Section for definitions and details. Consult your local ASCO office for Types 3S and 4X.

Electrical: Standard Voltages:

24, 120, 240, 480 volts, AC, 60 Hz (or 110, 220 volts, AC, 50 Hz).

6, 12, 24, 120, 240 volts, DC.

Other voltages available when required.

*DuPont Co. trademark.

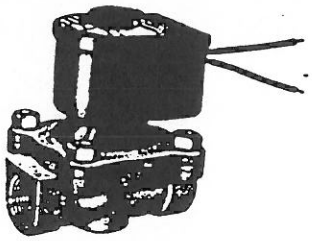

Coil: Continuous Duty Molded Class A, B, F and H, as listed.

Temperature:

Fluid: To 210°F., as listed.

Ambient: Nominal Range, 32°F. to 77°F. (104°F. occasionally — refer to Engineering Section.)

Installation:

Dimensions: Refer to Dimensions Tables for envelope size and mounting.

Attitude: Valves may be mounted in any position except as noted in Dimensions Table.

Approvals: UL listed and CSA certified, as indicated. Refer to Engineering Section for details and coding explanation.

SPECIFICATIONS

Pipe Size (Inc.)	Orifice Size (Inc.)	Cv Flow Factor	Operating Pressure Differential (psi) Minimum	Maximum Air-Inert Gas AC	Maximum Air-Inert Gas DC	Maximum Water AC	Maximum Water DC	Maximum Light Oil @ 300 SSU AC	Maximum Light Oil @ 300 SSU DC	Maximum Fluid Temp. °F. AC	Maximum Fluid Temp. °F. DC	Type 1 General Purpose Solenoid Enclosure Catalog Number	Type 1 Constr. Ref. No. ①	Type 1 UL Listing	Types 4 and 7 (C and D) Watertight and Explosion-Proof Solenoid Enclosure Catalog Number	Types 4 and 7 UL Listing	Watt Rating/Class of Coil Insulation AC	Watt Rating/Class of Coil Insulation DC
NORMALLY CLOSED OPERATION, Forged Brass Body, Buna "N" or Teflon① Seating for General Service																		
¼	5/16	1.2	5	125	—	120	—	—	—	180	—	8210B20	3D	•	—	—	6.5/B	—
⅜	¼	1.2	5	125	—	125	—	—	—	180	—	8210B21	3D	•	—	—	6.5/B	—
	⅜	1.5	①	125	40	125	40	—	—	180	150	8210C73④	1P	•	8211C73④	•	6/A	11.2/A
	⅜	3	0	100	40	100	40	—	—	180	150	8210C93	5D	○	8211C93	○	11/A	11.2/A
	⅜	3	5	200	125	135	100	135	100	180	150	8210D1	6D	○	8211D1	○	6/A	11.2/A
	⅜	3	5	300	—	300	—	300	—	175	—	8210C6	5D	○	8211C6	○	16.7/F	—
½	7/16	2.2	①	125	40	125	40	—	—	180	150	8210A15	2P	•	8211A15	•	6/A	11.2/A
	½	4	5	200	125	135	100	135	100	180	150	8210D2	6D	○	8211D2	○	6/A	11.2/A
	½	4	0	100	40	100	40	—	—	180	150	8210C94	5D	○	8211C94	○	11/A	11.2/A
	½	4	5	300	—	300	—	300	—	175	—	8210C7	5D	○	8211C7	○	16.7/F	—
	¾	5	0	100	40	100	40	—	—	180	150	8210D95	8D	○	8211D95	○	11/A	11.2/A
¾	¾	5	5	125	100	125	90	125	75	180	150	8210D9	9D	○	8211D9	○	6/A	11.2/A
	¾	6	0	350	200	300	180	200	180	200	77	8210B26⑤	10P	⑤	8211B26⑤	⑤	15.4/A	30.6/H
	¾	6.5	5	250	125	150	125	100	125	180	150	8210D3	11D	○	8211D3	○	6/A	11.2/A
1	1	13	5	125	125	125	125	100	125	180	150	8210D4	12D	○	8211D4	○	6/A	11.2/A
	1	13.5	10	300	225	300	200	300	200	200	180	8210B78⑤	13P	⑤	8211B78⑤	⑤	16.7/F	16.8/A
	1	13.5	0	300	—	225	—	115	—	200	—	8210B27	14P	•	8211B27	•	20/F	—
	1	13	0	125	100	125	100	125	80	180	77	8210B54	31D	⑤	8211B54	⑤	15.4/A	30.6/H
1¼	1¼	15	5	125	125	125	125	100	125	180	150	8210D8	16D	○	8211D8	○	6/A	11.2/A
	1¼	15	10	300	225	300	200	300	200	200	180	8210B80⑤	17P	—	8211B80⑤	—	16.7/F	16.8/A
	1¼	15	0	125	100	125	100	125	80	180	77	8210B55	32D	⑤	8211B55	⑤	15.4/A	30.6/H
1½	1½	22.5	5	125	125	125	125	100	125	180	150	8210D22	18D	○	8211D22	○	6/A	11.2/A
	1½	22.5	10	300	225	300	200	300	200	200	180	8210B82⑤	19P	—	8211B82⑤	—	16.7/F	16.8/A
	1½	22.5	0	125	100	125	100	125	80	180	77	8210B56	33D	⑤	8211B56	⑤	15.4/A	30.6/H
2	1½	43	5	125	50	125	50	90	50	180	150	8210100	20P	—	8211100	—	6/A	11.2/A
2½	1½	45	5	125	50	125	50	90	50	180	150	8210101	21P	—	8211101	—	6/A	11.2/A
3	3	101	10	250	—	250	—	250	—	200	—	8210B51⑤	22P	—	8211B51⑤⑥	—	28/H	—

DWG. ITEM NO. SV SHEET 1 OF 3

SPECIFICATIONS (continued)

Pipe Size (ins.)	Orifice Size (ins.)	Cv Flow Factor	Operating Pressure Differential (psi) Minimum	Maximum Air-Inert Gas AC	Maximum Air-Inert Gas DC	Maximum Water AC	Maximum Water DC	Maximum Light Oil @ 300 SSU AC	Maximum Light Oil @ 300 SSU DC	Maximum Fluid Temp. °F. AC	Maximum Fluid Temp. °F. DC	Type 1 General Purpose Solenoid Enclosure Catalog Number	Constr. Ref. No. ①	UL Listing	Types 4 and 7 (C and D) Watertight and Explosion-Proof Solenoid Enclosure Catalog Number	UL Listing	Watt Rating/ Class of Coil Insulation AC	Watt Rating/ Class of Coil Insulation DC
NORMALLY OPEN OPERATION,② Forged Brass Body, Buna "N" Seating for General Service																		
⅜	⅜	3	0	125	125	125	125	125	80	180	150	8210C33	23D	•	8211C33	•	10.5/A	11.2/A
½	⅜	4	0	125	125	125	125	125	80	180	150	8210C34	23D	•	8211C34	•	10.5/A	11.2/A
⅝	¾ ¾	5.5 6.6	0 5	125 250	125 250	125 200	125 200	125 200	80 200	180 180	150 180	8210C35 8210C13	25D 24D	• •	8211C35 8211C13	• •	10.5/A 10.5/A	11.2/A 11.2/A
1	1 1	13 13	0 5	125 125	— 125	125 125	— 125	125 125	— 125	180 180	— 180	8210B57 8210D14	34D 26D	• ⑤	— 8211D14	— —	15.4/A 20/F	16.8/A —
1¼	1⅛ 1⅛	15 15	0 5	125 125	— 125	125 125	— 125	125 125	— 125	180 180	— 180	8210B58 8210D18	35D 28D	• —	— 8211D18	— —	15.4/A 20/F	16.8/A —
1½	1¼ 1¼	22.5 22.5	0 5	125 125	— 125	125 125	— 125	125 125	— 125	180 180	— 180	8210B59 8210D32	36D 29D	• —	— 8211D32	— —	15.4/A 20/F	16.8/A —
2	1¾	43	5	125	125	125	125	125	125	180	150	8210103	30P	—	8211103	—	15.4/A	16.8/A
2½	1¾	45	5	125	125	125	125	125	125	180	150	8210104	27P	—	8211104	—	15.4/A	16.8/A
NORMALLY CLOSED OPERATION, Forged Brass Body, Ethylene Propylene Diaphragm for Hot Water Service																		
⅜	⅝ ⅝	3 3	5 ④	— —	— —	125 100	100 40	— —	— —	210 210	150 150	8210D1HW 8210C93HW	6D 5D	⑤ ⑤	8211D1HW 8211C93HW	— ⑤	6/A 11/A	11.2/F 11.2/F
½	⅝ ⅝	4 4	5 ④	— —	— —	125 100	100 40	— —	— —	210 210	150 150	8210D2HW 8210C94HW	6D 5D	⑤ ⑤	8211D2HW 8211C94HW	— ⑤	6/A 11/A	11.2/F 11.2/F
¾	¾ ¾	5 5	5 ④	— —	— —	125 100	100 40	— —	— —	210 210	150 150	8210D9HW 8210D95HW	9D 8D	⑤ ⑤	8211D9HW 8211D95HW	— ⑤	6/A 11/A	11.2/F 11.2/F
NORMALLY CLOSED OPERATION, Nylon Body, Buna "N" Diaphragm for General Service																		
⅜" O.D. Compression	5/16	1.2	5	125	—	125	—	—	—	130	—	8210B10	4D	•	—	—	6.5/B	—
NORMALLY CLOSED OPERATION, Stainless Steel Body, Buna "N" Diaphragm for Corrosive Liquids and Gases																		
⅜	⅜	1.5	①	125	40	125	40	—	—	180	150	8210A36⑥	1P	•	8211A36⑥	•	6/A	11.2/A
½	7/16 ⅝	2.2 4	① 0	125 125	40 40	125 125	40 40	— 125	— —	180 175	150 150	8210A37⑥ 8210C87	2P 7D	• •	8211A37⑥ 8211C87	• •	6/A 16.7/F	11.2/A 11.2/A
¾	⅝	4.5	0	125	40	125	40	125	—	175	150	8210C88	7D	•	8211C88	•	16.7/F	11.2/A
1	1	11.2	0	125	100	125	100	125	80	180	77	8210D89	15D	⑤	8211D89	⑤	15.4/A	30.6/H
NORMALLY OPEN OPERATION, Stainless Steel Body, Buna "N" Diaphragm for Corrosive Liquids and Gases																		
½	⅝	3	0	125	125	125	125	100	80	180	150	8210B30	37D	•	8211B30	—	10.5/A	11.2/A
¾	⅝	3	0	125	125	125	125	100	80	180	150	8210B38	38D	•	8211B38	—	10.5/A	11.2/A

Notes: ① 5 psi on air and inert gas; 1 psi on water.
② Letter "D" denotes diaphragm construction; "P" denotes piston construction.
③ Main valve has bronze body.
④ "0" psi on AC construction, ⅜ psi on DC.
⑤ UL listed as General Purpose Valve on AC voltage only.
⑥ Valve includes Ryton (Phillips Petroleum trademark) piston.
⑦ Valve includes nylon disc holder, except 8210B57, 8210B58, 8210B59.
⑧ Valves provided with Teflon main seat.
⑨ Suitable for Types 4 and 7 (C and D) only and has a temperature range code T2B.

ELECTRICAL INFORMATION

Standard Coil and Class of Insulation	Watt Rating and Power Consumption: DC Watts	AC Watts	AC VA Holding	AC VA Inrush	Spare Coil Part No. AC	Spare Coil Part No. DC
A	11.2	6	15.6	34	96-619	27-463
F	11.2	—	—	—	—	66-611
A	16.8	10.5 & 11	23	55	27-462	96-671
H	30.6	—	—	—	—	74-073
A	—	15.4	23.6	70	96-817	—
F	—	16.7	35	78	64-982	—
F	—	20	43	240	99-257	—
H	—	28	57	250	222-345	—
B	—	6.5	9.2	17.3	204-945	—

OPTIONAL FEATURES

Many optional electrical and construction features are available, refer to Optional Feature Section

ORDERING INFORMATION

IMPORTANT: We must have CATALOG NUMBER, VOLTAGE and HERTZ, operating pressure and fluid handled. Use strainers with solenoid valves.

DWG. ITEM NO. SV SHEET 2 OF 3

ASCO Automatic Switch Co. 50-56 Hanover Road, Florham Park, New Jersey 07932, Tel. (201) 966-2000

© Automatic Switch Co. MCMLXXXIII. All Rights Reserved.

Printed in U.S.A.

DIMENSIONS (in inches)

Weather and Explosion-Proof Solenoid Enclosure shown dotted in. Details available on request.)

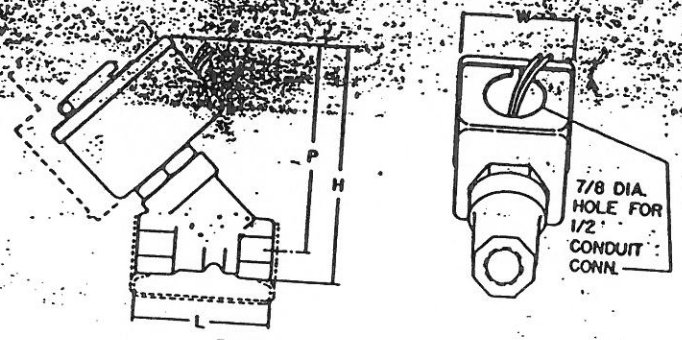

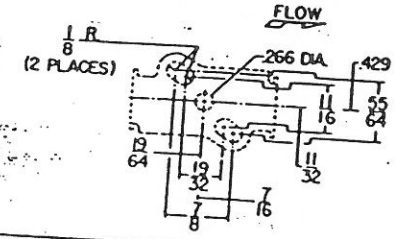

Mounting Bracket Available — refer to Price Schedule.

Constr. Ref.	H	L	P	W
1*	3 15/16	1 29/32	3 1/2	1 13/16
2*	3 29/32	2 9/32	3 3/8	1 21/32

*DC dimensions slightly larger.

Constr. Refs. 1 and 2

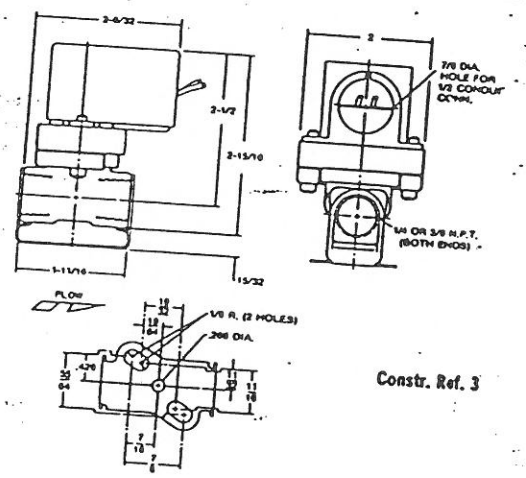

Constr. Ref. 3

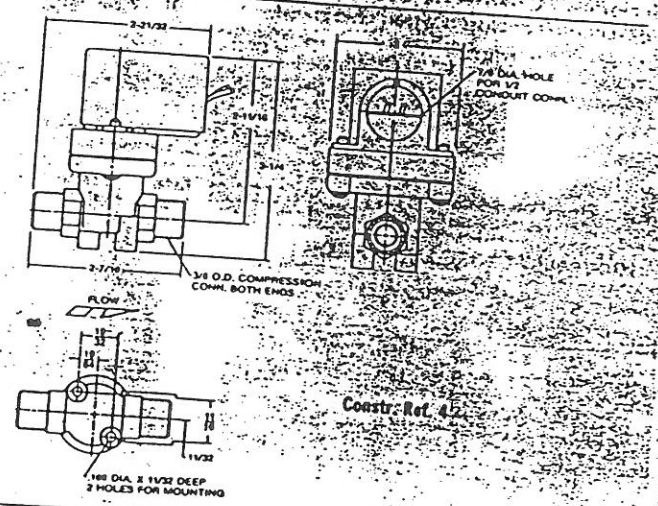

Constr. Ref. 42

Constr. Refs. 5 to 38

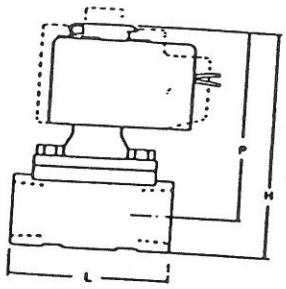

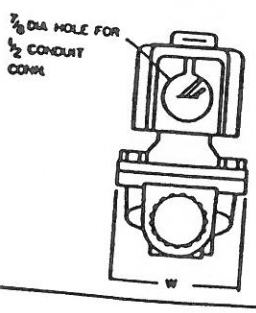

Constr. Ref.	H	L	P	W
5	3 29/32	2 1/4	3 11/32	2 5/16
6*	3 13/32	2 1/4	2 27/32	2 5/16
7	4 7/32	2 13/16	3 1/2	2 13/32
8	4 5/32	2 13/16	3 1/2	2 5/16
9*	3 5/8	2 13/16	3	2 5/16
10*#	5 1/4	2 13/16	4 15/32	2 5/16
11*	4 5/32	3 25/32	3 17/32	2 3/4
12*	5 5/8	3 3/4	4	2 15/16
13*	5 5/8	3 3/4	4 1/4	4 1/4
14#	6 17/32	3 15/16	5 23/32	3 1/4
15*	6 9/32	3 3/4	5 7/32	3 27/32
16*	5 5/8	3 21/32	4	3 3/8
17*	5 5/8	3 21/32	4 1/4	4 11/16
18*	6 1/8	4 3/8	4 5/32	3 3/8
19*	6 3/8	4 3/8	4 13/32	5 19/32
20*	7 5/16	5 1/16	4 9/16	4 11/16
21*	7 5/16	5 1/2	4 9/16	5 3/16

Constr. Ref.	H	L	P	W
22#	13 7/8	10 1/2	10 5/32	8 15/16
23	4 13/32	2 3/4	3 27/32	2 9/32
24	5 1/16	3 25/32	4 7/16	2 3/4
25	4 5/8	2 13/16	4	2 5/32
26	6 17/32	3 3/4	4 29/32	2 15/16
27	8 7/32	5 1/2	5 15/32	5 1/16
28	6 17/32	3 21/32	4 29/32	3 3/8
29	7 1/32	4 3/8	5 1/16	3 3/4
30	8 7/32	5 1/16	5 15/32	4 11/16
31*	5 1/4	3 3/4	4 7/16	3 1/4
32*	5 11/16	3 21/32	4 11/16	3 1/4
33*	6 1/16	4 3/8	4 15/16	3 29/32
34#	6 29/32	3 3/8	6 3/32	3 1/4
35#	7 11/32	3 21/32	6 11/32	3 1/4
36#	7 21/32	4 3/8	6 5/16	3 29/32
37	4 11/16	2 13/16	3 31/32	2 13/32
38	4 11/16	2 13/16	3 31/32	2 13/32

*DC dimensions slightly larger.

All valves mountable in any position without affecting operation, except construction noted # which must be mounted with solenoid vertical and upright.

DWG. ITEM NO. SV SHEET 3 OF 3

BULLETIN NO. 1210
FEBRUARY 1963
(Replaces all previous editions of Bulletins 1200 and 1210)

SARCO

PIPELINE STRAINERS

TYPES AT, BT, CT, AND D

for condensate, steam, water, oil, air, gas, and other piped fluids

PROTECT

- steam traps
- pumps
- control valves
- compressors

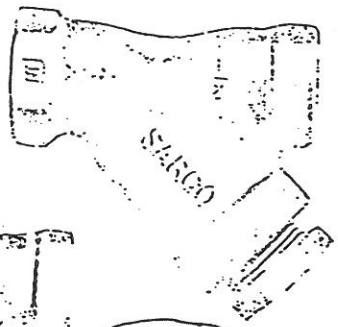

Types AT and BT

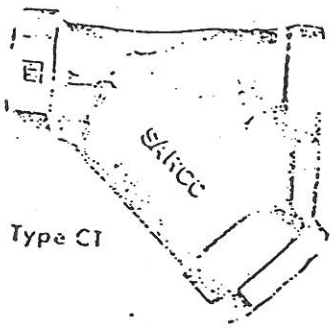

Type CT

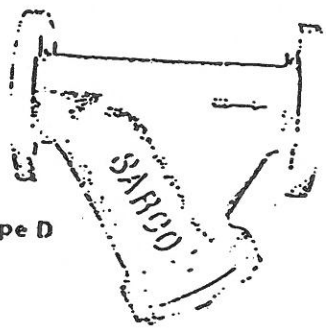

Type D

Sarco Pipeline Strainers are effective, inexpensive insurance against costly shutdowns and heavy repair bills caused by dirt, scale, or metal chips in pipelines. Installed ahead of the equipment, they protect the working parts of temperature and pressure regulators, steam traps, pumps, meters, burners, compressed air equipment, hydraulic systems, lubricators, and nozzles.

The Sarco Strainer Screen—The key to the successful performance of a pipeline strainer is the *screen*. The standard screen used in Sarco strainers is constructed to fit the body tightly to prevent particles from by-passing the screen at the ends. Generous proportion of open screen area in relation to pipe size minimizes pressure drop.

The rigid construction of the standard Sarco heavy-duty monel mesh screen prevents rupture of the screen when accumulated sediment creates abnormal pressure differentials. Standard Sarco monel mesh screens have .033" openings (equivalent to 1/32" perforated screen or 20-mesh screen). Every Sarco strainer is tested at the factory.

COMPARATIVE CONSTRUCTION FEATURES AND RATINGS

TYPES →		AT	BT	CT	D STANDARD	D EXTRA HEAVY
BODY	MATERIAL	SEMI-STEEL	BRONZE	CAST STEEL	SEMI-STEEL	SEMI-STEEL
STANDARD SCREEN	MATERIAL	HEAVY-DUTY MONEL MESH WITH .033" OPENINGS (EQUIVALENT TO 1/32" PERFORATED SCREEN OR 20-MESH SCREEN)			HEAVY-GAGE BRASS	HEAVY-GAGE BRASS
	PERFORATION				STEAM: 1/32" WATER: 2-3". 4-12".	PERF. 1/16" PERF. 1/8" PERF.
RATINGS	SATURATED STEAM TO-	250 psi	250 psi	600 psi	125 psi	250 psi
	LIQUIDS (NON-SHOCK) TO-	250 psi	250 psi	600 psi	200 psi	400 psi
	TOTAL TEMPERATURE	475°F.	450°F.	750°F.	475°F.	475°F.

DWG. ITEM NO. S-W SHEET 1 OF 3

SARCO PIPE

Type "AT", Semi-steel; Type "BT", Bronze—250 psi

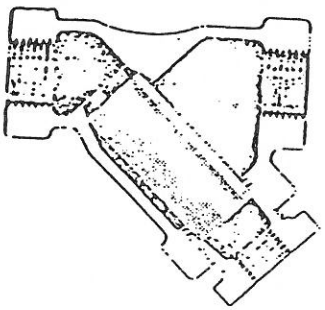

Types AT and BT

CONSTRUCTION FEATURES—Heavy-duty 250 psi bodies; tensile strength 30,000# per square inch minimum.

Type "AT"—Semi-steel bodies

Type "BT"—Bronze bodies

Bodies are reinforced with external rib for maximum strength.

Long, tapered screen socket in body assures correct screen position and tight fit without buckling. Standard .033" heavy-duty monel mesh screen is furnished unless otherwise specified.

Cap design provides a sediment collection chamber below screen.

RATINGS—Type "AT"—for saturated steam or liquids to 250 psi non-shock, and 475°F total temperature.

Type "BT"—for saturated steam or liquids to 250 psi non-shock, and 450°F total temperature.

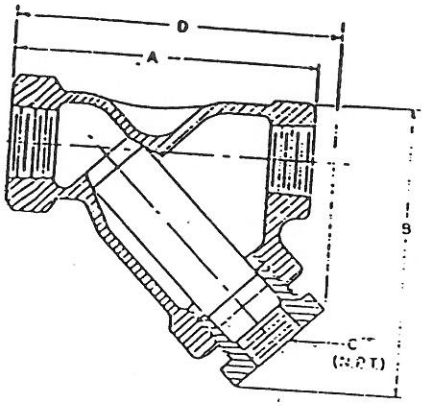

Type "CT", Cast steel—600 psi

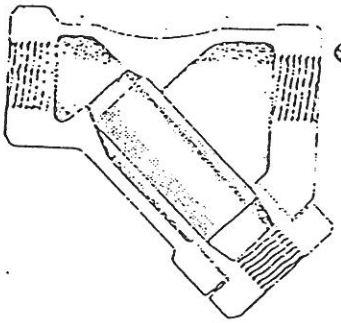

Type CT

CONSTRUCTION FEATURES—Heavy-duty 600 psi Cast Steel Bodies. Tensile strength 70,000# per square inch minimum. Bodies are reinforced for maximum strength. Long, tapered screen socket in body assures correct screen position and tight fit without buckling. Standard .033" heavy-duty monel mesh screen is furnished unless otherwise specified. Cap design provides a sediment collection chamber below screen.

RATINGS—For saturated steam or liquids to 600 psi non-shock and 750°F total temperature.

Standard CT has threaded connections. Optional socket weld connections available at additional cost.

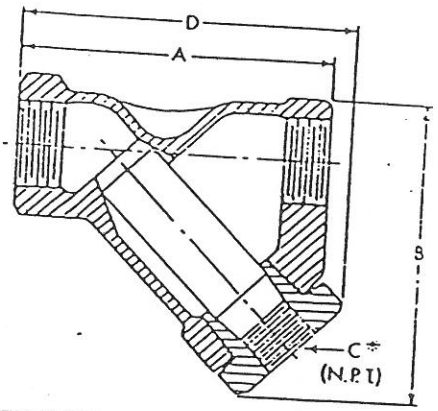

Type "D", Semi-steel—125 and 250 psi

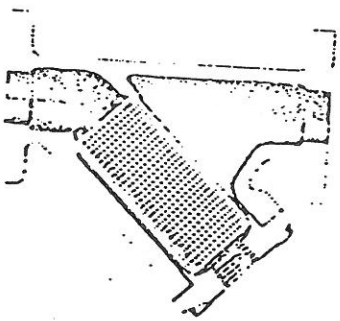

Type D

CONSTRUCTION FEATURES—Two types of Flanged Strainers are listed in the following tables: the "Standard" for saturated steam to 125 psi and the "Extra Heavy" type for saturated steam to 250 psi.

Both types include brass screens with perforations as follows: Steam—1/32" perforations for all sizes. Water—1/16" perforations for 2" to 3" inclusive. 1/8" perforations for 4" and above. Strainer caps are flanged in all sizes.

RATINGS:

TYPE "D" STANDARD

Bodies of semi-steel for pressures as follows:

2" to 6"—for saturated steam to 125 psi; 475°F total temperature.

8" to 12"—for saturated steam to 125 psi; 450°F total temperature.

2" to 12"—for cold liquid to 200 psi non-shock.

TYPE "D" EXTRA HEAVY

Bodies of semi-steel for pressures as follows:

2" to 6"—for saturated steam to 250 psi; 475°F total temperature.

8" to 12"—for saturated steam to 250 psi; 450°F total temperature.

For cold liquid to 400 psi non-shock.

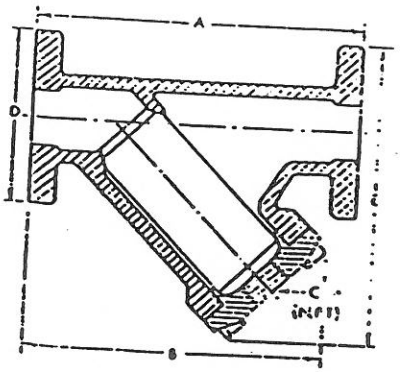

DWG. ITEM NO. S-W SHEET 2 OF 3

*NOTE: ALL STRAINERS CAN BE FURNISHED WITH PLUGGED BLOW-OFF OUTLET (Dimension "C", above) AT EXTRA COST

LINE STRAINERS

DIMENSIONS AND WEIGHTS

TYPE "AT"—Semi-Steel

Size	Dimensions, Inches A	B	C	D	Net Wt.
¼"	2⅞	2 13/16	¼	3¼	14 oz.
⅜"	2⅞	2 13/16	¼	3¼	13 oz.
½"	3 3/16	3⅜	⅜	3⅜	1 lb., 2 oz.
¾"	4⅜	4¼	⅜	4⅜	2 lb.,
1"	4⅞	4½	½	5	2 lb., 14 oz.
1¼"	5⅜	5⅜	¾	5⅞	4 lb., 6 oz.
1½"	6½	5⅞	¾	6⅜	7 lb., 3 oz.
2"	7½	6⅞	1	7½	11 lb., 13 oz.
2½" †	8⅝	8¾	1¼	9⅞	20 lb., 8 oz.
3" †	10⅞	10¼	1¼	10¾	30 lb., 11 oz.

TYPE "BT"—Bronze

Size	Dimensions, Inches A	B	C	D	Net Wt.
¼" ‡	3¼	2 13/16	¼	3⅜	1 lb., 1 oz.
⅜"	2⅞	2 13/16	¼	3¼	1 lb.
½"	3 3/16	3⅜	⅜	3⅞	1 lb., 6 oz.
¾"	4⅜	4¼	½	4⅜	2 lb., 7 oz.
1"	4⅞	4½	¾	5	3 lb., 8 oz.
1¼"	5⅜	5⅜	¾	5⅞	5 lb., 6 oz.
1½"	6⅜	6⅞	¾	6⅝	8 lb., 13 oz.
2"	7½	7⅜	1	7⅞	14 lb., 8 oz.
2½" †	8⅝	8¾	1¼	9⅞	25 lb., 3 oz.
3" †	10⅞	10¼	1¼	10¾	37 lb., 12 oz.

NOTE: ‡ ¼" size is the ⅜" strainer fitted with ¼" bushings. †2½" and 3" strainers have flanged caps.

TYPE "CT"—Cast Steel

Size	Dimensions, Inches A	B	C	D	Net Wt.
½"	3 3/16	3½	⅜	3¾	1 lb., 8 oz.
¾"	4½	4½	⅜	4 13/16	2 lb., 8 oz.
1"	4⅞	4 13/16	½	5¼	3 lb., 10 oz.
1¼"	5⅜	5⅜	¾	5 13/16	5 lb., 5 oz.
1½"	6⅜	6⅜	¾	6 13/16	8 lb., 4 oz.
2"	7½	7 3/16	1	8¼	12 lb., 12 oz.

Socket Weld connection, available at additional cost.

TYPE "CT" WITH OPTIONAL SOCKET WELD CONNECTIONS

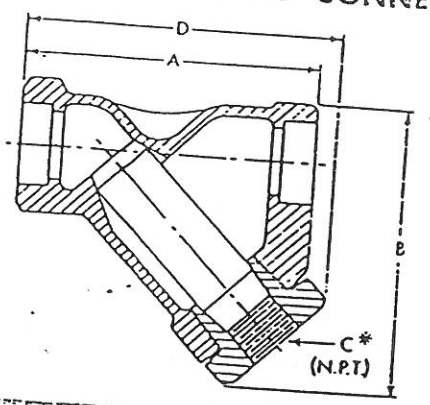

TYPE "D" FLANGED—Standard, Semi-steel ‡

Size	Dimensions, Inches A	B	C	D	E	Net Wt.
2"	9⅞	8⅝	1¼	6	10⅞	29 lb.
2½"	11⅞	10	1¼	7	12½	39 lb.
3"	12 5/16	11¼	1¼	7½	13¾	57 lb.
4"	16¼	16 5/16	1¼	9	17⅜	97 lb.
5"	18	18 5/16	1½	10	20	137 lb.
6"	20½	20¼	1½	11	21	223 lb.
8"	23⅜	...	2	13½	23 5/16	269 lb.
10"	27 5/16	...	2	16	27¾	414 lb.
12"	31½	...	2	19	32⅜	697 lb.

TYPE "D" FLANGED—Extra Heavy, Semi-steel

Size	Dimensions, Inches A	B	C	D	E	Net Wt.
2"	10⅞	8¾	1¼	6½	11¼	33 lb.
2½"	11¾	10 5/16	1¼	7½	12¾	47 lb.
3"	13 3/16	11⅜	1¼	8¼	14½	70 lb.
4"	16⅞	15⅞	1¼	10	20	129 lb.
5"	18⅞	19	1½	11	20½	159 lb.
6"	21⅜	20¼	1½	12½	21 13/16	253 lb.
8"	25	...	2	15	23 13/16	316 lb.
10"	29½	...	2	17½	28⅜	475 lb.
12"	33¼	...	2	20½	33⅜	750 lb.

‡ Includes ASA standard drilling of flanges; does not include companion flanges.

DIMENSIONS OF FLANGED STRAINERS ARE BEING CHANGED. FOR UP-TO-DATE DIMENSIONS, REQUEST CURRENT CERTIFIED DIMENSION SHEET.

DWG. ITEM NO. S-W SHEET 3 OF 3

*NOTE: ALL STRAINERS CAN BE FURNISHED WITH DIRECTED FLOW OFF SHELF.

DWG. ITEM TD SHEET 1 OF 1

RTD SPECIFICATIONS

RTD PROBE MODEL NUMBER	OPERATING TEMPERATURE RANGE	SENSING ELEMENT *	LEADWIRE AWG #	MINIMUM CASE LENGTH "A"	CASE DIA. "C"
SINGLE ELEMENT PROBES					
S44	-79° to 500°F	C, F, N, or P	26	3.00"	.188"
S51	-62° to 260°C		22	2.80"	.215"
S52	(Nickel-Iron		22	4.00"	.215"
S53	element		22	2.80"	.250"
S54	to 204°C)		26	2.80"	.188"
DUAL ELEMENT PROBES					
S56	-79° to 500°F	C,F,N, or P	26	4.00"	.215"
S57	-62° to 260°C (Nickel-Iron element to 204°C)				.250"
S59		F,N, or P			.188"

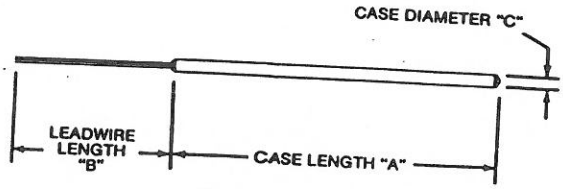

MODELS S51, S53, S54, S56, S57, S59

Models S51, S53, and S54 are single element probes that are identical in configuration except for case diameter. Models S56, S57, and S59 are dual element probes that have two isolated elements of the same material in the tip. Dual element probes are desirable when a signal must perform two separate functions, such as operating a recorder and an alarm. This eliminates the need for a second probe. Models S56, S57, and S59 are identical in configuration except for case diameter.

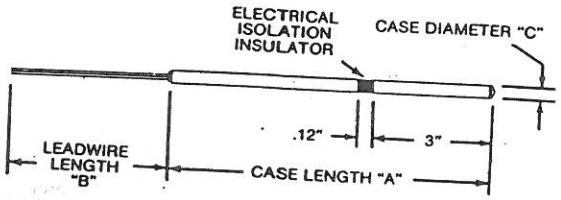

MODEL S52

Model S52 is similar to the S51 except it has an insulator located near the tip to electrically isolate the sensing tip from the remainder of the case. This model is recommended for use in machinery having electrically "hot" bearings.

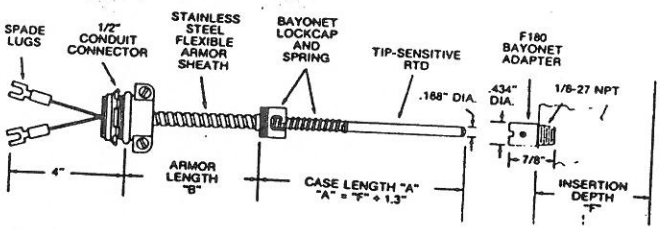

MODEL S44

Model S44 is an RTD probe joined to a bayonet lockcap and spring with flexible steel armor cable and conduit connector. The F180 bayonet adapter may be ordered separately.

* SENSING ELEMENTS

Code	Material	Resistance Calibration	Resistance Temperature Table
C =	Copper	10 ohms @ 25°C (77°F) ±0.52°C	16-9
F =	Nickel-Iron	604 ohms @ 0°C (32°F) ±1.08°C	14-604
N =	Nickel	120 ohms @ 0°C (32°F) ±0.85°C	7-120
P =	Platinum	100 ohms @ 0°C (32°F) ±1.25°C	1-100

LEADWIRES

Stranded copper, Teflon insulated. Leadwire resistance is included in 2-leadwire models when combined case and leadwire length (A+B) is less than 48". If A+B is greater than 48", calibration tolerance is increased by .03 ohm for each 12" increase beyond 48" for AWG#22 leads and .08 ohm for AWG#26 leads. Leadwire resistance is excluded in 3-leadwire models. Two leadwires are standard for 604 ohm Nickel-Iron and 120 ohm Nickel elements. Three leadwires are standard for 10 ohm Copper and 100 ohm Platinum elements.

SENSOR CASE

Stainless steel with highly conductive copper alloy tip. Cases may be shortened by user with lathe (if internal burr is removed) to any length not less than specified minimum length "A". Model S44 cannot be shortened. Maximum standard case length is 48". Longer case lengths available on custom order.

INSULATION RESISTANCE

Single element models: 1000 megohms @ 500 VDC, leads to case. Dual element models: 100 megohms minimum @ 100 VDC between elements and leads to case.

TIME CONSTANT

2.0 seconds typical in water @ 3 FPS.

SELF HEATING

Typically 50 milliwatts per °C (27 milliwatts per °F) in oil.

PRESSURE RANGE

Unprotected probes rated to 500 psi over the specified temperature range (This rating applies to only the 3" tip of Model S52).

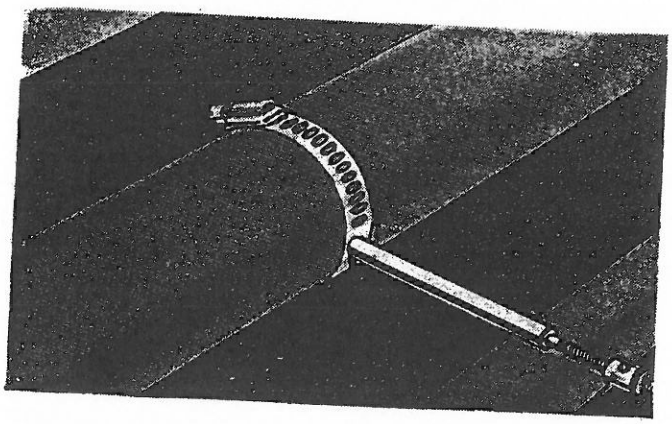

MODEL F518 Pipe Clamp Adapter

Model S44 can be used with the F518 Pipe Clamp Adapter to sense pipe surface temperatures when immersion sensing is impractical. This adapter allows direct contact of the RTD tip with the pipe wall for fast time response. Specify case length "A" for Model S44 of 4.3" when using the F518. See detailed drawing on page 3 of this bulletin.

Please refer to Page 4 for ORDERING INFORMATION

Special application hose

Textile braid low pressure

1525

Construction: Synthetic rubber tube, textile braid reinforcement, oil and mildew resistant textile braid cover.

Application: For gasoline, fuel and lubricating oils, air and water. For more specific information on fluid applications, see pages 16–20.

Operating Temperature Range: −40°F. to +200°F. (−40°C. to +93°C.)/Except air, +160°F. (+71°C.).

Fittings: *SOCKETLESS*, pages 77–80.

Assembly Instructions: Page 107.

For complete Agency Listings: See page 28.

Part Number	Hose I.D. (inches)	Hose O.D. (inches)	Maximum Operating Pressure (psi)	Minimum Burst Pressure (psi)	Minimum Bend Radius* (inches)	Vacuum Service (in./Hg)	Weight per ft. (lbs.)
1525–4	.25	.50	250	1000	3.00	28	.06
1525–6	.38	.62	250	1000	3.00	28	.09
1525–8	.50	.75	250	1000	5.00	28	.12
1525–10	.62	.91	250	1000	6.00	18	.18
1525–12	.75	1.03	250	1000	7.00	18	.16

Textile braid low pressure

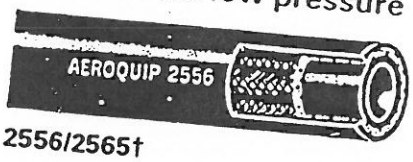

2556/2565†

Construction: Synthetic rubber tube, textile braid reinforcement and synthetic rubber cover.

Application: For gasoline, fuel and lubricating oils, air and water. For more specific information on fluid applications, see pages 16–20.

Operating Temperature Range: −40°F. to +200°F. (−40°C. to +93°C.)/Except air, +160°F. (+71°C.)

Fittings: *SOCKETLESS*, pages 77–80. See Kit No. 5144, page 89.

Assembly Instructions: Page 107.

For complete Agency Listings: See page 28.

2556–4	.25	.50	250	1000	3.00	28	.07
2556–6	.38	.62	250	1000	3.00	28	.12
2556–8	.50	.75	250	1000	5.00	28	.15
2556–10	.62	.91	250	1000	6.00	18	.20
2556–12	.75	1.03	250	1000	7.00	18	.24

DWG. ITEM NO. H1
SHEET 1 OF 1

†NOTE: Low temperature synthetic rubber covered MIL-H-13444 Type 1 hose [illegible]

Type LOL 1-Fiber Braid Low Pressure Lock-On Hose (3284-D)

Recommended For: Petroleum base hydraulic oils, antifreeze solutions, water, gasoline, hot lubricating oils, diesel fuels, air.

Tube: Synthetic rubber. Black.

Reinforcement: One fiber braid.

Cover: Oil and mildew resistant, synthetic rubber for additional resistance to abrasion. Available in five different colors—see "Specifications" table.

Temperature Range: −40°F. to +200°F.

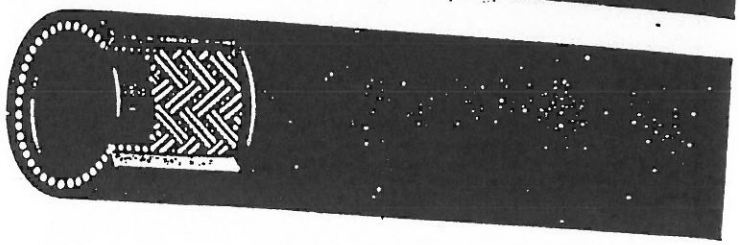

SPECIFICATIONS

[1] Catalog No.	Product No. — Cover Color: Black	Blue	Green	Red	Yellow	Hose I.D. (In.)	Hose O.D. (In.)	Working Press. (psi)	Min. Burst Press. (psi)	Min. Bend Radius (In.)	Wt. Per 100 Ft. (Lbs.)
*3LOL	3284-0633	3284-0410	3284-0420	3284-0430	3284-0440	3/16	0.406	200	800	3	6
4LOL	3284-0631	3284-0411	3284-0421	3284-0431	3284-0441	1/4	0.469	200	800	3	7
6LOL	3284-0630	3284-0412	3284-0422	3284-0432	3284-0442	3/8	0.609	200	800	3	11
8LOL	3284-0632	3284-0413	3284-0423	3284-0433	3284-0443	1/2	0.750	200	800	5	15
10LOL	3284-0634	3284-0414	3284-0424	3284-0434	3284-0444	5/8	0.906	200	800	6	20
12LOL	3284-0635	3284-0415	3284-0425	3284-0435	3284-0445	3/4	1.031	200	800	7	24

Couplings for use with this hose are shown on Pages R-24 and R-25.

[1] Add one letter to Catalog No. to designate color required as follows: Black = A, Blue = B, Green = G, Red = R, Yellow = Y. Example: 8LOL with Black Cover would be 8LOLA.
*Couplings for this hose available on special order only.

Type C4 Large Diameter Return and Suction Hose—SAE 100R4 (SAE 100R4 Hose)

SPECIFICATIONS

Catalog No.	Product No.	Hose I.D. (In.)	Hose O.D. (In.)	Suction (In. Hg.)	Working Press. (psi)	Min. Burst Press. (psi)	Min. Bend Radius (In.)	Wt. Per 100 Ft. (Lbs.)
12C4	3580-0075	3/4	1.250	25	300	1,200	5	48
16C4	3580-0100	1	1.500	25	250	1,000	6	58
20C4	3580-0125	1 1/4	1.812	25	200	800	8	93
24C4	3580-0150	1 1/2	2.093	25	150	600	10	114
32C4	3580-0200	2	2.500	25	100	400	12	125

Couplings for use with this hose are shown on Page R-26.

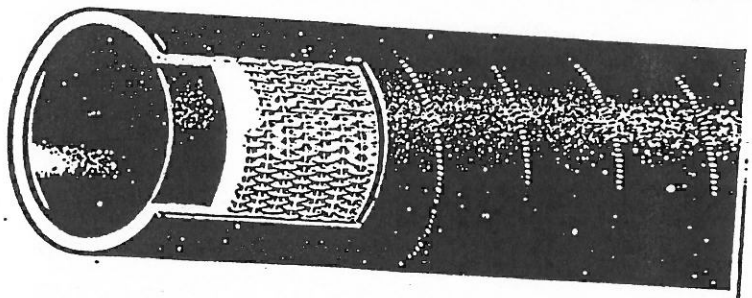

Recommended For: Petroleum base hydraulic oils, and gasoline in suction lines requiring a vacuum rating, or in low pressure return lines. Meets or exceeds requirements of SAE 100R4.

Tube: Synthetic rubber. Black.

Reinforcement: Woven fiber with a spiral wire to prevent collapse.

Cover: Black, oil and abrasion resistant synthetic rubber.

Temperature Range: −40°F. to +200°F.

DWG. ITEM NO. H2 SHEET 1 OF 1

Type LOL 1-Fiber Braid Low Pressure Lock-On Hose (3284-D)

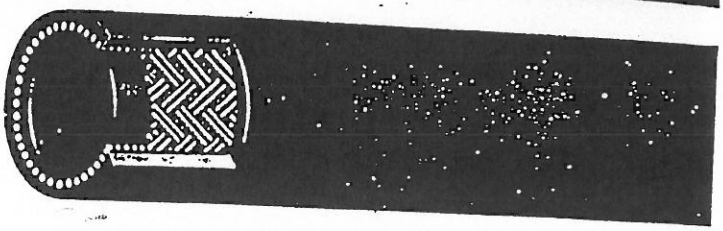

Recommended For: Petroleum base hydraulic oils, antifreeze solutions, water, gasoline, hot lubricating oils, diesel fuels, air.

Tube: Synthetic rubber. Black.

Reinforcement: One fiber braid.

Cover: Oil and mildew resistant, synthetic rubber for additional resistance to abrasion. Available in five different colors—see "Specifications" table.

Temperature Range: −40°F. to +200°F.

SPECIFICATIONS

Catalog No.	Product Nos. Cover Color: Black	Blue	Green	Red	Yellow	Hose I.D. (in.)	Hose O.D. (in.)	Working Press. (psi)	Min. Burst Press. (psi)	Min. Bend Radius (in.)	Wt. Per 100 Ft. (Lbs.)
*3LOL	3284-0633	3284-0410	3284-0420	3284-0430	3284-0440	3/16	0.406	200	800	3	6
4LOL	3284-0631	3284-0411	3284-0421	3284-0431	3284-0441	1/4	0.469	200	800	3	7
6LOL	3284-0630	3284-0412	3284-0422	3284-0432	3284-0442	3/8	0.609	200	800	3	11
8LOL	3284-0632	3284-0413	3284-0423	3284-0433	3284-0443	1/2	0.750	200	800	5	15
10LOL	3284-0634	3284-0414	3284-0424	3284-0434	3284-0444	5/8	0.906	200	800	6	20
12LOL	3284-0635	3284-0415	3284-0425	3284-0435	3284-0445	3/4	1.031	200	800	7	24

Couplings for use with this hose are shown on Pages R-24 and R-25.

†Add one letter to Catalog No. to designate color required as follows: Black = A, Blue = B, Green = C, Red = R, Yellow = Y. Example: 8LOL with Black Cover would be 8LOLA.
*Couplings for this hose available on special order only.

Type C4 Large Diameter Return and Suction Hose—SAE 100R4 (SAE 100R4 Hose)

SPECIFICATIONS

Catalog No.	Product No.	Hose I.D. (in.)	Hose O.D. (in.)	Section (in. Hg.)	Working Press. (psi)	Min. Burst Press. (psi)	Min. Bend Radius (in.)	Wt. Per 100 Ft. (Lbs.)
12C4	3580-0075	3/4	1.250	25	300	1,200	5	48
16C4	3580-0100	1	1.500	25	250	1,000	6	58
20C4	3580-0125	1 1/4	1.812	25	200	800	8	93
24C4	3580-0150	1 1/2	2.093	25	150	600	10	114
32C4	3580-0200	2	2.500	25	100	400	12	125

Couplings for use with this hose are shown on Page R-26.

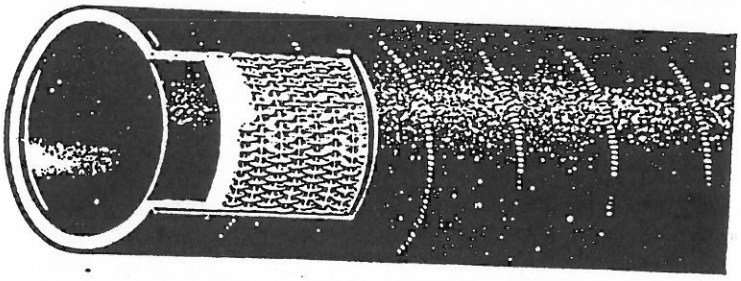

Recommended For: Petroleum base hydraulic oils, and gasoline in suction lines requiring a vacuum rating, or in low pressure return lines. Meets or exceeds requirements of SAE 100R4.

Tube: Synthetic rubber. Black.

Reinforcement: Woven fiber with a spiral wire to prevent collapse.

Cover: Black, oil and abrasion resistant synthetic rubber.

Temperature Range: −40°F. to +200°F.

DWG. ITEM NO. H3 SHEET 1 OF 1

CUSTOMER: City of Winnipeg

Document No. 5592-GRT-188-01
Rev.
Date:

CONTRACTOR: North End Water Pollution Control Center
CONTRACT NO.: 52955
PENNWALT ORDER NO.: 485592/93/94/95/96/97
NAME OF PROJECT: City of Winnipeg
North End Water Pollution Control Center
CITY'S PROJECT NO.: 8-1-2
ENGINEER'S PROJECT NO.: 42820-14

MACHINE
PM76,000

EM	QUAN. PER MACH.	PART NAME	DESCRIPTION
		PM76,000 MISCELLANEOUS CATALOG CUTS	
	4	Vibration Mounts (Centrifuge)	Korfund Company part #SIG-56 combined Snubber Vibro Isolator Assembly with 1" internal adjusting bolt.
	4	Vibration Mounts (Drive Motor)	Korfund Company part #SIE-68, internal adjustment. Free height 6-1/8" welded steel construction.

KORFUND

SERIES S • SPRING VIBRO-ISOLATOR
ALL WELDED STEEL • HEAVY DUTY • ALL DIRECTIONAL

Variations Available

LEVEL ADJUSTMENT: Type "SK" external adjustment with single bolt thru isolator top plate. "SI" internal adjustment bolt. Type "SO" is nonleveling.

ADJUSTMENT BOLT: Standard bolt will pass through 2 inch thick machine leg. Longer bolts available at extra cost.

SNUBBER ADJUSTMENT: Fully adjustable snubbing by means of end bolts is standard for all Series "S" Isolators.

SNUBBER INSERTS: Elastomer impregnated cotton duck for heavy duty service is standard. Special materials for corrosive chemical atmospheres available at extra cost.

SPRINGS: Oil tempered, high carbon steel springs are standard. Special steels or coatings for corrosion resistance available at extra cost.

HOUSING MATERIALS: Heavy duty all welded steel construction is standard.

TYPES SK & SI LEVELING
Housing Sizes D through J

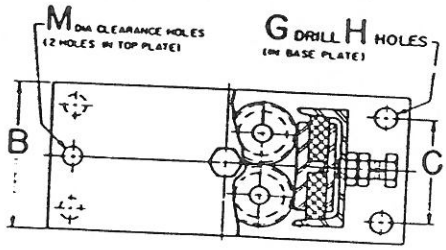

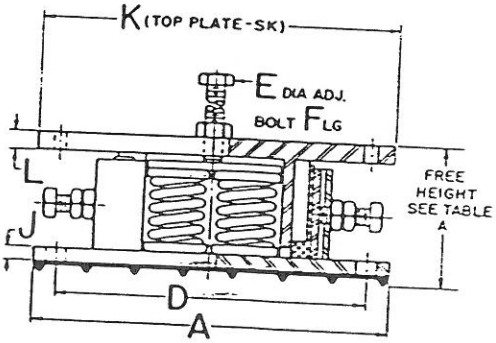

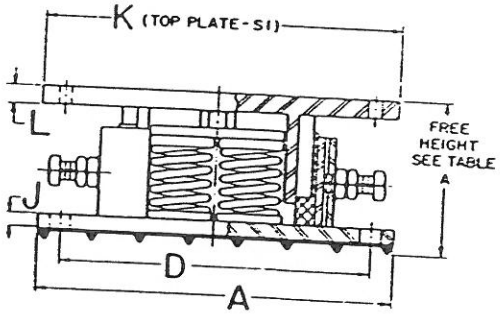

TABLE "A"

ISOLATOR HOUSING SIZE	ISOLATOR SPRING NO(1)	MAX. CAPACITY LBS. MAX. STEADY	MAX. CAPACITY LBS. MAX. IMPACT	ISOLATOR CONSTANT LBS/IN	FREE HEIGHT INCHES SK	FREE HEIGHT INCHES SI	MIN. WORKING HEIGHT INCHES
D 2 SPRINGS	50	100		50	6"	6 7/8"	5 1/8"
	51	250		125			
	52	400		240			
	53	600		380			
	54	1000		690			
	55	1400		1120			
	56	2400		3300			
	45	650	520	880	5 1/8"	5 1/2"	
	46	900	720	1600			
	47	1200	960	2450			
	57	2200	1650	4260			
	68	2600	2450	5300		5 7/8"	
E 4 SPRINGS	50	200		100	6 1/4"	7 1/8"	5 1/4"
	51	500		250			
	52	800		480			
	53	1200		760			
	54	2000		1380			
	55	2800		2240			
	56	4800		6600			
	45	1300	1040	1760	5 1/4"	5 3/4"	
	46	1800	1440	3200			
	47	2400	1920	4900			
	57	4400	3300	8520			
	68	5200	4900	10,600		6 1/8"	
G 9 SPRINGS	51	1125		563	7"	8"	6 3/4"
	52	1800		1080			
	53	2700		1710			
	54	4500		3105			
	55	6300		5040			
	56	10,800		14,850			
	45	2925	2340	3960	6 3/4"	6 3/4"	
	46	4000	3200	7200			
	47	5400	4320	11,025			
	57	9900	7425	19,160			
	68	11,700	11,025	23,850		7"	
H	754	7640	5720	11,540	7 1/2"	8 3/4"	SKH 7"
	755	9540	7150	14,430			
	756	11,450	8580	17,320			
	757	13,370	10,000	20,200			
	758	15,300	11,460	23,090			SIH 8 1/4"
	759	17,200	12,900	25,970			
J	7512	22,900	17,160	34,640		8 3/4"	SIJ 8 1/4"

TABLE "B"

HOUSING SIZE	DIMENSIONS (INCHES) A	B	C	D	E	F	G	H	J	K	L	M	SHIPPING WTS (LBS)
D	9 1/2	5	–	8 1/4	5/8	6	5/8	2	3/8	9 1/2	1/2	5/8	35
E	11 5/8	5	–	10 1/8	3/4	6	3/4	2	3/8	11 5/8	5/8	3/4	45
G	16	7	3 1/2	14	1	6	3/4	4	1/2	16	3/4	7/8	95

(1) 7 or 8 springs may be used for special job conditions

ITEM NO. 1

SHEET 1 OF 1

KORFUND

SERIES S • SPRING VIBRO-ISOLATOR
ALL WELDED STEEL • HEAVY DUTY • ALL DIRECTIONAL

Variations Available

LEVEL ADJUSTMENT: Type "SK" external adjustment with single bolt thru isolator top plate. "SI" internal adjustment bolt. Type "SO" is nonleveling.

ADJUSTMENT BOLT: Standard bolt will pass through 2 inch thick machine leg. Longer bolts available at extra cost.

SNUBBER ADJUSTMENT: Fully adjustable snubbing by means of end bolts is standard for all Series "S" Isolators.

SNUBBER INSERTS: Elastomer impregnated cotton duck for heavy duty service is standard. Special materials for corrosive chemical atmospheres available at extra cost.

SPRINGS: Oil tempered, high carbon steel springs are standard. Special steels or coatings for corrosion resistance available at extra cost.

HOUSING MATERIALS: Heavy duty all welded steel construction is standard.

TYPES SK & SI -LEVELING
Housing Sizes D through J

TABLE "A"

ISOLATOR HOUSING SIZE	ISOLATOR SPRING NO(1)	MAX. CAPACITY LBS. MAX. STEADY	MAX. CAPACITY LBS. MAX. IMPACT	ISOLATOR CONSTANT LBS./IN.	FREE HEIGHT INCHES SK	FREE HEIGHT INCHES SI	MIN. WORKING HEIGHT INCHES
D 2 SPRINGS	50	100		50	6"	6 7/8"	5 1/8"
	51	250		125			
	52	400		240			
	53	600		380			
	54	1000		690			
	55	1400		1120			
	56	2400		3300			
	45	650	520	880	5 1/8"	5 1/2"	
	46	900	720	1600			
	47	1200	960	2450			
	57	2200	1650	4260			
	68	2600	2450	5300		5 1/8"	
E 4 SPRINGS	50	200		100	6 1/4"	7 1/8"	5 1/4"
	51	500		250			
	52	800		480			
	53	1200		760			
	54	2000		1380			
	55	2800		2240			
	56	4800		6600			
	45	1300	1040	1760	5 1/4"	5 3/4"	
	46	1800	1440	3200			
	47	2400	1920	4900			
	57	4400	3300	8520			
	68	5200	4900	10,600		6 1/8"	
G 9 SPRINGS	51	1125		563	7"	8"	6 3/4"
	52	1800		1080			
	53	2700		1710			
	54	4500		3105			
	55	6300		5040			
	56	10,800		14,850			
	45	2925	2340	3960	6 3/4"	6 3/4"	
	46	4000	3200	7200			
	47	5400	4320	11,025			
	57	9900	7425	19,160			
	68	11,700	11,025	23,850		7"	
H	754	7640	5720	11,540	7 1/2"	8 3/4"	SKH 7"
	755	9540	7150	14,430			
	756	11,450	8580	17,320			
	757	13,370	10,000	20,200			
	758	15,300	11,460	23,090			SIH 8 1/4"
	759	17,200	12,900	25,970			
J	7512	22,900	17,160	34,640		8 3/4"	SIJ 8 1/4"

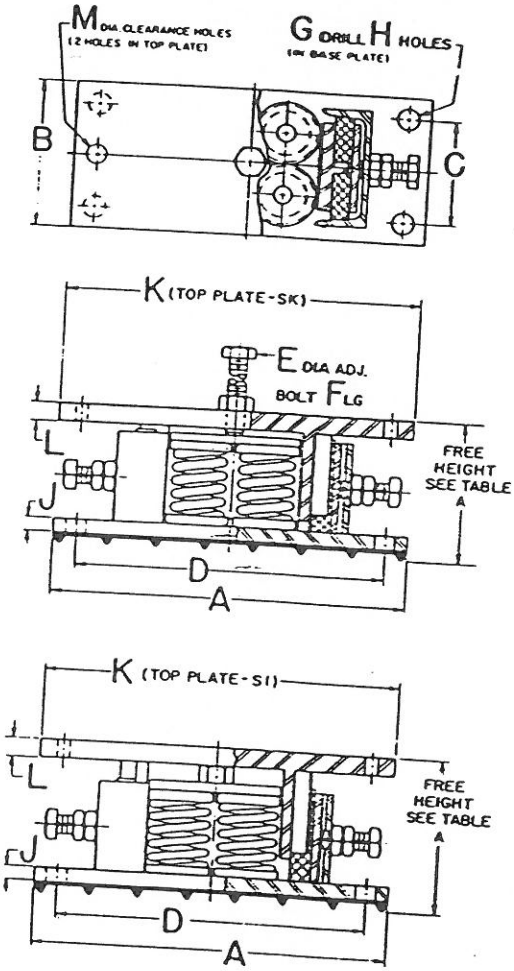

TABLE "B"

HOUSING SIZE	DIMENSIONS (INCHES) A	B	C	D	E	F	G	H	J	K	L	M	SHIPPING WTS. (LBS)
D	9 1/2	5	–	8 1/4	5/8	6	5/8	2	3/8	9 1/2	1/2	5/8	35
E	11 5/8	5	–	10 1/8	3/4	6	3/4	2	3/8	11 5/8	5/8	3/4	45
G	16	7	3 1/2	14	1	6	3/4	4	1/2	16	3/4	7/8	95

7 or 8 springs may be used for special job conditions

ITEM NO. 2

SHEET 1 OF 1

SHARPLES
ALFA-LAVAL GROUP

DESCRIPTION OF THE BEARING TEMPERATURE SENSING SYSTEM FOR SUPER-D-CANTERS

SHARPLES, INC.
955 Mearns Road, Warminster, PA 18974-9998 • (215) 443-4000

© 1989 Sharples Inc.
All Rights Reserved

DESCRIPTION

The bearing temperature sensing device incorporated on the Super-D-Canters consists of a resistive temperature detector (RTD) assembled to each pillow block bearing housing. Each detector is held in contact with the outer race of the pillow block bearing by spring pressure as shown on the attached drawing.

The characteristics of this detector are such that its resistance changes linearly with temperature.

The required controller may be furnished by either the customer or by Pennwalt depending upon the condition of the contract. If this control is furnished by Pennwalt, it can be a solid state device that will sense the increase in resistance of either bearing resulting from higher bearing temperature and can initiate an alarm, a temperature readout, or other control function.

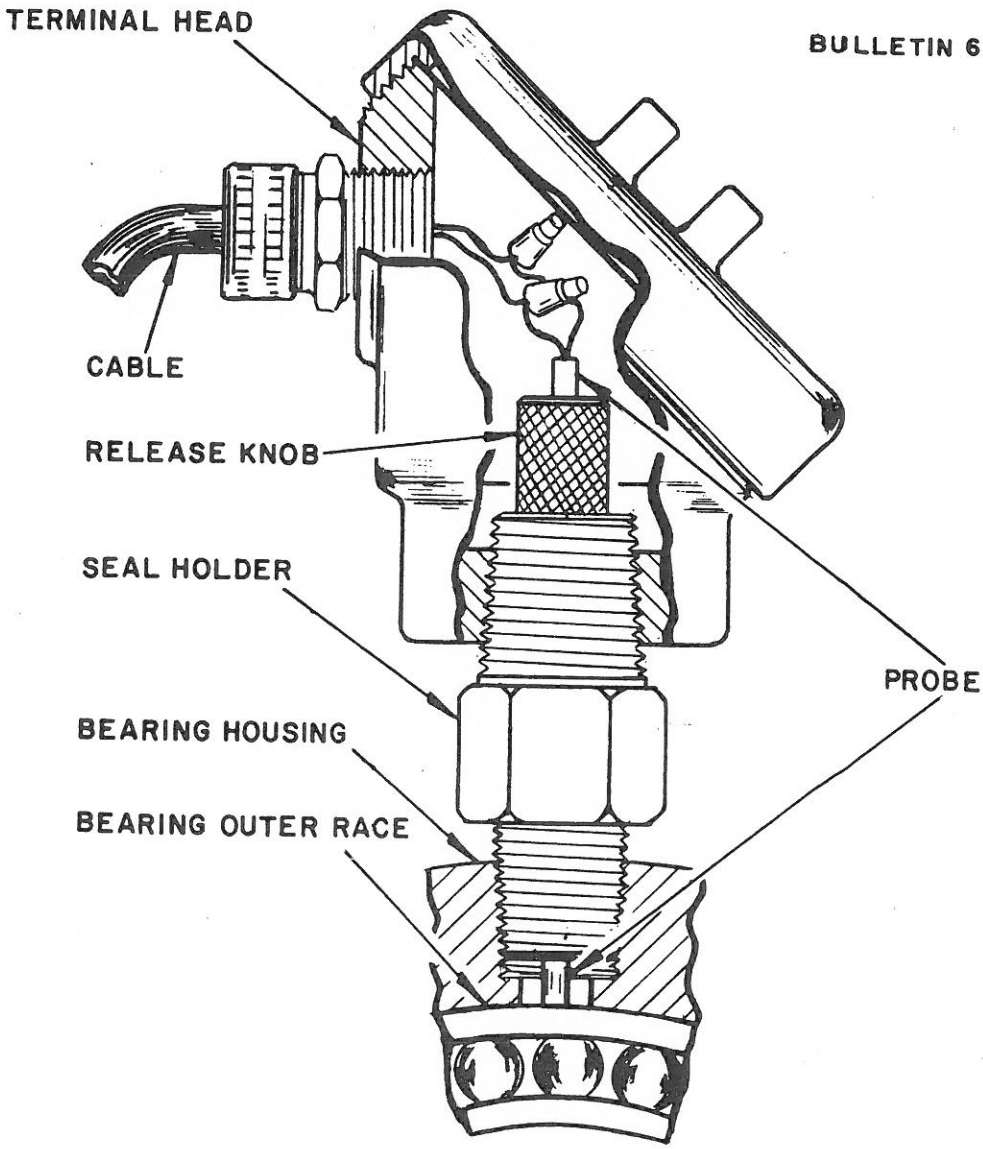

TO INSTALL PROBE

STEP - 1

PULL OUT RELEASE KNOB AS FAR AS IT WILL GO, ROTATE APPROXIMATELY 1/2 TURN CLOCKWISE AGAINST STOP. PRESS IN TO LOCK IN OPEN POSITION.

STEP - 2

INSERT PROBE THROUGH HOLE IN RELEASE KNOB, PUSH PROBE SLOWLY THROUGH O-RING SEAL TO FULL DEPTH AND CONTACT AGAINST BEARING.

STEP - 3

PULL OUT RELEASE KNOB AS FAR AS IT WILL GO, ROTATE APPROXIMATELY 1/2 TURN COUNTERCLOCKWISE AGAINST STOP, THEN RELEASE. KNOB WILL MOVE INWARD APPROXIMATELY 1/8 INCH LOCKING AND APPLYING SPRING LOADING FORCE TO HOLD PROBE AGAINST BEARING.

TO REMOVE PROBE - IT WILL FIRST BE NECESSARY TO PERFORM STEP - 1

TEMPERATURE SENSOR ASSEMBLY FOR PILLOW BLOCK BEARING

Installation and Maintenance Instructions for Series LL & LG, Flow Meters

and those Series 00 and WW flow meters that utilize the piston design.

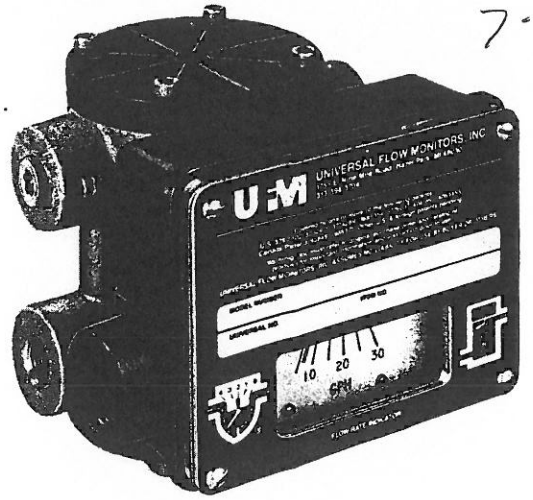

This piston-design flow meter is designed and built to withstand the rigors of industrial service, and remain accurate. It will easily pass flows to approximately 1-1/2 times its rated capacity.

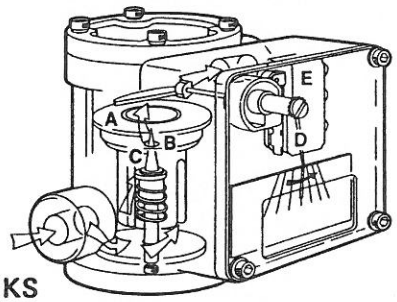

HOW IT WORKS

Fluid flow causes a spring-loaded piston **A** having a circular opening at its center **B** to move along the axis of a precision-tapered shaft **C**. This creates a variable orifice in direct proportion to the flow rate. The equilibrium position of the piston is mechanically linked to the readout pointer **D**, and the strong force developed as fluid pressure acts on a large piston area easily actuates readout devices **E**.

ENGINEERING DATA

Standard max. temperature: 200° F
Optional max. temperature (all but WW): 400° F
Maximum operating pressures
(3:1 Safety factor) 150 psi with plastic cap
300 psi with metal cap
(8:1 Safety factor, for gases) 125 psi with metal cap only
Readout accuracy, full scale: 5% (opt. 3%)
Pressure drop (increasing over flow range): 2 to 4.5 psi (ave. 3)

Inspect contents of shipment for shipping damage. All damage claims should be made to the shipping agent before installing.

INSTALLATION

The materials used in constructing this flow meter were selected for a specific fluid and application. (See original customer order.) It should not be used with different fluid without consulting factory.

This is an in-line device that can be mounted in any position without affecting performance. Simply thread your piping into the NPT ports, being sure that the flow goes into the port marked "IN." (Do not use Teflon tape to seal pipe threads in cast iron housings.) To insure accuracy, control valves should be installed downstream of the flow meter.

These units may have one or two electric switches, pneumatic switches, or transmitters having a 4-20 mA DC output. Other options on request.

ELECTRIC SWITCHES

Make connections in accordance with the appropriate diagram below. (Switches may be removed to facilitate wiring them.)

WARNING: Instruments connected to AC power lines constitute a potential electric shock hazard to users. Make certain that the branch circuit is disconnected from power supply before touching anything inside the control box.

STANDARD SWITCHES

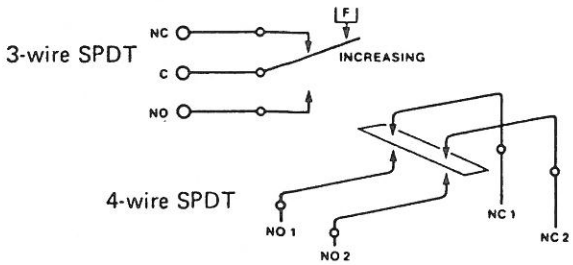

EXPLOSION-PROOF SWITCHES

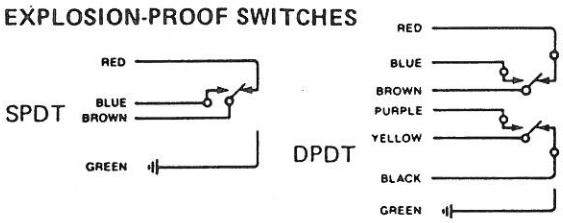

SWITCH SPECS:

3-wire and 4-wire SPDT switches are rated 15A at 125, 230 & 480 VAC; 1/2A at 125 VDC or 1/4A at 250 VDC (res.). Hermetically-sealed switches are rated 5A at 125 VAC or 28 VDC (res.). Explosion-proof SPDT & DPDT switches are rated Div. 1, Class 1, Group A, B, C & D, Class II, Group E, F & G; 11A, 1/4-hp at 125 & 250 VAC, and 5A res., 3A ind. at 28 VDC. Standard max. temperature, 180F; optional, 400F.

SETTING THE SWITCH POINT

The cam that actuates the switch is located on the dial assembly mounted inside the control box. The position of the cam dictates the switch point, i.e., the flow rate at which the cam throws the switch. (Usually, the switch point is initially set at the factory.) To set or reset the switch point, proceed as follows:

Warning: Shut off electric power to control box before opening it. Remove cover and window from control box, then loosen the cam screw. Insert a screwdriver into the pointer screw, and direct the pointer along the scale to the flow rate you wish to signal. Then rotate the cam until the switch actuates (clicks), and tighten the cam screw.

To adjust the setting under flow conditions, simply adjust the flow to the flow rate you wish to signal. Then loosen the cam screw and rotate the cam until the switch actuates (clicks). Tighten the cam screw and the switch is set for that flow rate.
For ease and accuracy in determining contact closure an ohmmeter can be connected across terminals.

To check the setting, direct the pointer again to the switch point, noting when the switch actuates, and make fine adjustments as necessary.

PNEUMATIC SWITCHES

The pneumatic switch in the Universal flow monitor is actually a 5-port, multi-purpose 4-way valve, which offers a number of circuiting possibilities, as illustrated by the following symbols. The air logic symbols for the valve's spring-controlled position are shown. Care should be taken to assure that unused ports are not blocked, as these act as exhaust ports.

When flow is above the switch point, the valve is held in the cam-controlled position. When flow falls below the switch point, the valve shifts to the spring-controlled position, changing the condition of the flow paths.

SPRING CONTROLLED POSITIONS

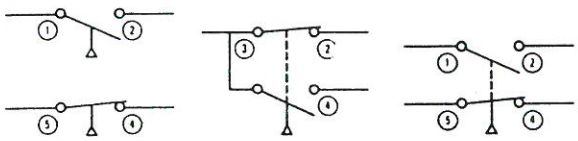

2 connections 1–2 | 3 connections 1–2–4 | 4 connections 1–2–4–5

Left side cam controlled, right side spring controlled.

POTENTIOMETER

The potentiometer gives a continuous non-linear remote readout. It may be mounted alone, but is often found along with a 3- or 4-wire switch. The potentiometer is rated at 2 watts.

TRANSMITTERS

When used with a Universal U-26 transmitter, flow rate information is converted to a 4-20mA, linear DC signal. A transducer in the control box on the flow monitor feeds the (remote) transmitter through a 3-wire shielded cable.

TRANSMITTER SPECIFICATIONS

OUTPUT SIGNALS

Two-wire Model U26-2:

I (out)	4-20 mA dc				
V (supply)	12	24	36	48	55
R (ohms)	100	700	1300	1900	2250

Four-wire Model U26-4:
a. 4-20 mA dc into 0-1,000 ohms, max.

PERFORMANCE

a. Calibrated Accuracy: ± 0.1%
b. Linearity: ± 0.1% max., ± 0.04% typical
c. Repeatability: ± 0.05% max., ± 0.02% typical.
d. Temperature Stability: ± 0.01%/°F max.
± 0.004%/°F typical
e. Load Effect: ± 0.01% zero to full load
f. Output Ripple: 10mV P/P max.
g. Response Time: 150 milliseconds
h. Common Mode Rejection: 140 db @ 60Hz

	Model U-26-2 (two-wire)	Model U-26-4 (four-wire)
I. Temperature Range:	−25-140° F operating −40-200° F storage	0-140° F operating −40-185° F storage
j. Power Supply:	12 to 55 Vdc (user supplied)	115/230 Vac, ±10%, 50/60 Hz, 1W, 0.5PF
k. Power Supply Effect:	±0.01% over operating range	±0.05%, for a ±10% power variation
l. Isolation (input/output):	1000 Vdc/600 Vac	600 Vac/1000/Vdc

NOTE: All accuracies are given as a percentage of span for the U26 transmitter alone. Overall system accuracy (transmitter and flow meter) is ±2% full scale maximum. Temperature effect on transducer is ±0.015%/°F. (minus below, plus above 70° F.) Max. fluid temp. is 300° F @ 85° F ambient.

The proper power source must be made available.

TRANSMITTER WIRING DIAGRAM

A twisted, 3-wire shielded cable should be used by customer to connect control box to transmitter. Shield must be grounded at terminal 1 of the transmitter. For up to 100 ft. use 20 ga. wire; to 150 ft. use 18 ga; to 250 ft. use 16 ga. For longer cable installations check with factory.

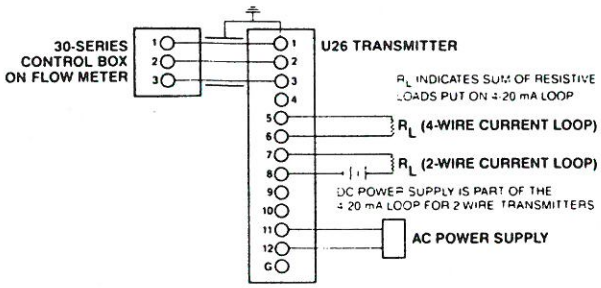

NOTE: Use of a common bus bar will minimize voltage differences caused by ground current loops, i.e., difference in potential between separate signal grounds power grounds, etc.

NOTE: Signal wires should be kept as far away as possible from AC power wires.

PARTS FOR LARGE CONTROL BOX

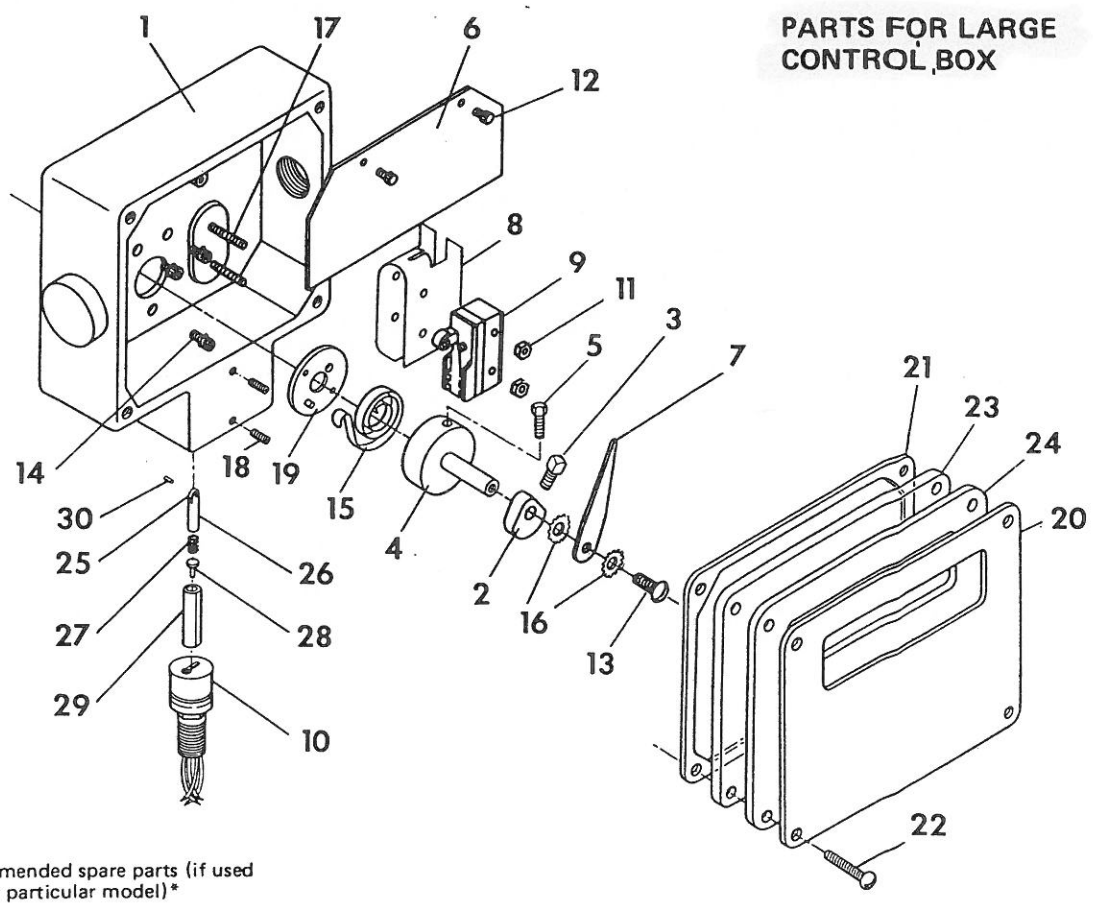

Recommended spare parts (if used in your particular model)*

Symbol	Part Name	Material	Part Number
1	Control Box	Aluminum	742
2	Cam (1 or 2)	Glass Filled Nylon	728
3	Cam Screw (1 or 2)	Stainless Steel	711
4	Dial	Nylon	308
5	Dial Screw	Steel	117
6	Standard Scale	Gravoply	727
7	Indicator Pointer	Aluminum	504
*8	Insulating Gasket		705
*9	Standard Switch (1 or 2)		
	3-wire SPDT		704
	4-wire SPDT		703
	3-wire Hermetically Sealed		706
	Pneumatic Switch		780
10	Explosion-Proof Switch (1 or 2)		
	3-wire SPDT		708
	6-wire DPDT		709
11	Switch Retainer Nut (2 or 4 req)	Brass	710
12	Tag Screw	Stainless Steel	124
13	Pointer Screw	18-8 Stainless Steel	116
14	SEMS Screw (3 req)	18-8 Stainless Steel	793
15	Spring	Stainless Steel	127

Symbol	Part Name	Material	Part Number
16	Lockwasher (2 req)	Stainless Steel	718
17	Blind head Machine Screw (2 or 4 req)	Stainless Steel	717
18	Set Screw (2 req)	Alloy	813
19	Spring Retainer	Glass Filled Nylon	128
20	Name Plate	Aluminum	754
		Stainless Steel	824
		Low Flow	825
*21	Control Box Gasket	Buna	912
		Vellumoid	746
		Viton	913
22	Name Plate Screw (4 req)	18-8 Stainless Steel	715
23	Control Box Lens	Acrylic	750
24	Weather Proof Back (Opt)	Hard Coated Aluminum	755
*25	Bearing	18-8 Stainless Steel	130
*26	Roller Arm	Nylon	911
*27	Spring	Stainless Steel	915
*28	Plunger	Nylon	909
29	Roller Arm Housing	Nylon	910
*30	Holding Pin	18-8 Stainless Steel	914

485595/6/7

TYPICAL TEST

RELIANCE ELECTRIC

DATA TRANSMITT AND CERTIFICATI

CUSTOMER ORDER NO.	DATE	REQ. NO.	S.O. NO.
PO 52369 -	10/16/87		00VAQ03415

REFER TO THIS NUMBI IN ALL CORRESPONDEN

SOLD TO: PENNWALT CORP
955 MEARNS RD
WARMINSTER PA 18974

SHIP TO: SAME AS "SOLD TO" UNLESS SHOWN
PENNWALT CORP
955 MEARNS RD
WARMINSTER PA 18974

DATA PROVIDED WITH THIS TRANSMITTAL AND CERTIFICATION IS:

- ☐ FOR CUSTOMER APPROVAL BY DATE: _____
  Return of approval prints by the above date is required to assure scheduled shipment, delay in return and/or revision of approval prints may require shipment reschedule. Return approved D/S to data source
- ☒ FINAL, APPROVED FOR CONSTRUCTION OR INSTALLATION
- ☐ PRELIMINARY, ENGINEERING IS COMPLETED.
- ☐ REVISED, SUPERSEDES DATA PREVIOUSLY ISSUED.
- ☐ SEE REMARKS.

DATA SOURCE TRANSMITTAL AND CERTIFICATION ISSUED BY: M. Colburn DATE 12-12-87 CK BY P. Hoode DATE 12.12.87
LARGE MOTOR PLANT
101 RELIANCE ROAD
KINGS MOUNTAIN, NC 28086

DATE PRINTED: 12/08/87

MOTOR OR GEN. DATA

ITEM	USED FOR	USERS PLANT	MOTOR OR GEN. D/S:
A	CENTRIFUGE		608980-559

QTY.	FRAME		SERV. FA	TYPE	R.P.M.	C BOX D/S
3	5010Y E	200 HP	1.15	P	1800	

PH/HZ/VOLTS-WINDING	DUTY	ENCLOSURE	AMB./INSL.	PWR. CODE	MOTOR OR GEN. C/D:
	CONT	TEFC-XT	40 /F /		

BEARINGS	MOUNTING & METHOD OF DRIVE	RAILS OR BASE	MODEL NUMBER	REDUCER OR AUX D/S
** ROLL	F2 NEMA			416820-8

ROTAT FROM OPP. DR. END	D-C FIELD EXCITATION	DOUBLE SHAFT EXTEN.	BRAKE OR AUX. D/S
CCW			* V54959.211 (6)

REDUCER DATA

REDUCER STYLE	CLASS	FRAME	RATIO	OUTPUT RPM	ASSEMBLY	BLOWER MOTOR PH/HZ/VOLTS/HP

BRAKE DATA

BRAKE TYPE	SIZE	RATING FT/LB	DUTY	P.O.

DATA FOR CONTROL

D-C MOTOR ARMATURE CURRENT: _____ AMPS
FIELD CHARACTERISTICS PER CURVE: _____
F_1—F_2, _____ MAX. AMPS _____ _____ RPM
F_{11}—F_{22}, _____ MAX. AMPS _____ _____ RPM
F_3—F_4, _____ MAX. AMPS _____ _____ RPM

A-C MOTOR INFORMATION FOR SELECTION OF STARTER HEATERS:
CODE: J LOCKED AMPS: 1467
F.L. CURRENT: 182 AMPS.

SPCL. INSTALLATION FEAT. AND MISC. DATA

ADDITIONAL MOTOR OR GEN DATA:
PHASE: 3 HERTZ: 60 VOLTS: 575
Lead Location (F2)
Frame Construction - Rigid
WDG PROT QTY 3 DESCRIPTION THERMISTOR, POS TEMP
Grease SRI-2
SPECIAL MARKS:
PART NO. 16-AT-130-CBM
Nema Design - Special
SPECIAL FEATURES:
CLASS B RISE-RING TYPE LUGS-CSA LABEL
6-LEAD WYE-DELTA
WK2 LOAD AT MOTOR SHAFT 19,751 LB FT2
WINDAGE AND FRICTION=65 HP
DIR. ROTATION ARROW
WINDING THERMISTORS-PR. CONTROL
SHIP MODEL 135 CONTROL LOOSE

* (6) = 3/4" Pipe Tapped Hole
** Cylindrical Roller Bearing

DUTY MASTER ALTERNATING CURRENT MOTORS

SQUIRREL-CAGE INDUCTION

ENCLOSURE: TOTALLY ENCLOSED FAN COOLED AND X/T LOW NOISE

MOUNTING: FOOT

ANTI-FRICTION BEARINGS

OVERSIZE CONDUIT BOX FOR STRESS CONES

FRAME 5010Y THRU 5012Z

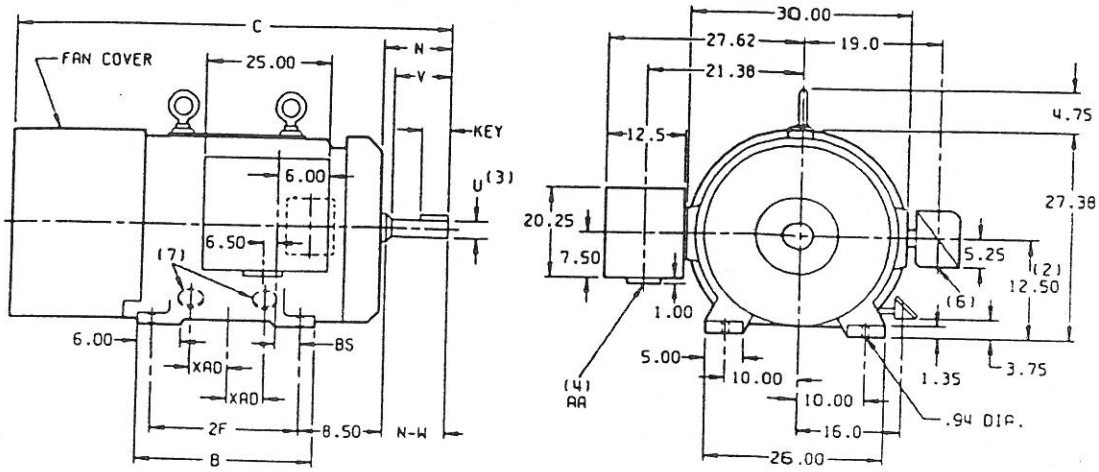

DIMENSIONS ARE IN INCHES

FRAME	DUTY	RPM (MAX.)	C	B	2F	BS	XAD	BACK END SHAFT AND KEY						WT. (LBS.)
								N	N-W	U(3)	V	SQ.	LGTH.	
5010Y	BELTED	1800	79.00	37.75	32.00	5.00	8.25	11.18	11.00	3.750	10.75	.875	8.00	4200
5010Z	COUPLED	1800	75.00	37.75	32.00	5.00	8.25	7.18	7.00	4.125	6.75	1.000	5.00	4200
5010S	COUPLED	3600	75.00	37.75	32.00	5.00	8.25	7.18	7.00	2.375	6.75	.625	4.00	4200
5012Z	COUPLED	1800	83.00	45.75	40.00	5.00	12.25	7.18	7.00	4.125	6.75	1.000	5.00	4500
(1)														

MOTOR CONDUIT BOX "AA"		
MAXIMUM FULL LOAD AMPERES	T.E.F.C.	T.E.F.C. X/T
201	4.0 CONDUIT	4.0 N.P.T.
335	5.0 CONDUIT	5.0 N.P.T.
600	6.0 N.P.T.	6.0 N.P.T.

(1) SPECIAL DIMENSIONS ON THIS LINE.
(2) THIS DIMENSION VARIES +.00 -.06
(3) THIS DIMENSION VARIES +.000 -.001
(4) "AA" VARIES WITH F.L. AMPS. SEE TABLE.
(5) WALL OR OBSTRUCTION MUST NOT ENCROACH ON AIR INLET SPACE.
(6) 2" N.P.T. FOR WINDING TEMPERATURE DETECTOR LEADS. WHEN ORDERED.
(7) 3/4 N.P.T. FOR BEARING TEMPERATURE DETECTOR LEADS. WHEN ORDERED.

CONDUIT BOX CAN BE ROTATED 360° IN 90° STEPS. A/F BRGS., CONDUIT BOX LOCATED ON OPPOSITE SIDE WHEN F-2.W-1.W-4.W-5. W-7 OR C-1 MOUNTING IS SPECIFIED.

IF MOUNTING CLEARANCE DETAILS ARE REQUIRED. CONSULT FACTORY.

MAXIMUM PERMISSIBLE SHAFT RUNOUT WHEN MEASURED AT END OF STD. SHAFT EXTENSION IS .003 T.I.R.

FRAME- _____ TYPE- _____ CERTIFIED FOR- _____

ORDER- _____ ITEM- _____ HP- _____ RPM- _____ PH- _____ HZ- _____ VOLTS _____

RELIANCE SALES ORDER- _____ APPROVED BY- _____ DATE _____

RELIANCE ELECTRIC
CLEVELAND, OHIO 44117 U.S.A.

DR. BY	E.JAMBOR
CK. BY	C.BLALOCK
APP. BY	W.L.SUBLER
DATE	12-8-87

DIMENSION SHEET

608980-559

ISSUE DATE DECEMBER 8, 1987

C/P

ENG. REF. S.O.=VA003414 & 3415

REL. S.O.	FRAME	HP	TYPE	PHASE/ HERTZ	RPM	VOLTS
VA-Q3415	E5010Y	200	P	3/60	1789	575

AMPS	DUTY	AMB°C/ INSUL.	S.F.	NEMA DESIGN	CODE LETTER	ENCL.
182	CONT	40/F	1.15	Special	J	TEFC-XT

E/S	ROTOR	TEST S.O.	TEST DATE	STATOR RES.@25°C OHMS (BETWEEN LINES)
611452-4-R	611413-10-TE	---	---	.0161

PERFORMANCE

LOAD	HP	AMPERES	RPM	% POWER FACTOR	% EFFICIENCY
NO LOAD	0	55.6	1800	8.37	0
1/4	50.0	74.1	1797	57.2	88.5
2/4	100	106	1795	76.1	93.2
3/4	150	142	1792	83.9	94.6
4/4	200	182	1789	86.7	95.1
5/4	250	225	1786	87.5	95.1

SPEED TORQUE

	RPM	TORQUE % FULL LOAD	TORQUE LB.-FT.	AMPERES
LOCKED ROTOR WYE CONNECTION	0	71	401	447
PULL UP WYE CONNECTION	0	77	401	446
BREAKDOWN WYE CONNECTION	1740	81	461	194
FULL LOAD DELTA CONNECTION	1789	100	587	182

AMPERES SHOWN FOR 575. VOLT CONNECTION. IF OTHER VOLTAGE CONNECTIONS ARE AVAILABLE, THE AMPERES WILL VARY INVERSELY WITH THE RATED VOLTAGE

REMARKS: CALCULATED DATA AT DELTA CONNECTION EXCEPT AS NOTED.

RELIANCE ELECTRIC
CLEVELAND, OHIO 44117 U.S.A.

DR. BY P.L.HOWER
CK. BY J.WACHOB
APP. BY F.HEREDOS
DATE 11-21-87

A-C MOTOR PERFORMANCE DATA

V54959.211

ISSUE DATE 11/21/87

REL S.O. VA-Q3415
FRAME E5010Y
HP 200 -
TYPE P
PHASE/HERTZ 3/60

RPM 1789
VOLTS 575
AMPS 182
DUTY CONT
AMB°C/INSUL 40/F

S.F. 1.15
NEMA DESIGN Special
CODE LETTER J
ENCLOSURE TEFC-XT
E/S 611452-4-R

ROTOR 611413-10-TE
TEST S.O. ---
TEST DATE ---
STATOR RES. @ 25°C .0484 OHMS (BETWEEN LINES)

CALCULATED DATA AT WYE CONNECTION

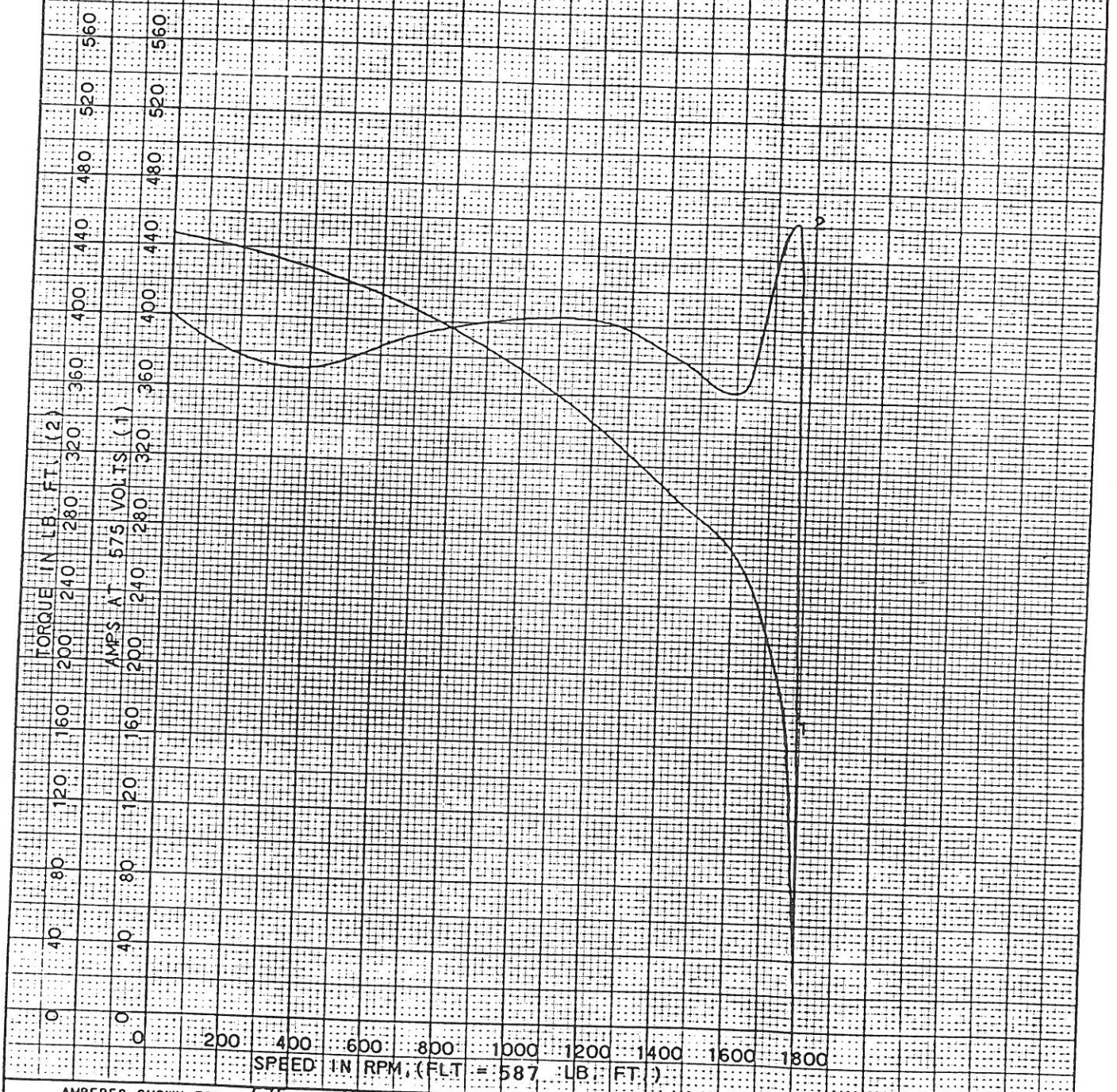

AMPERES SHOWN FOR 575 VOLT CONNECTION. IF OTHER VOLTAGE CONNECTIONS ARE AVAILABLE, THE AMPERES WILL VARY INVERSELY WITH THE RATED VOLTAGE.

RELIANCE ELECTRIC
CLEVELAND, OHIO 44117 U.S.A.

DR. BY P.L.HOWER
CK. BY J.WACHOB
APP. BY F.HEREDOS
DATE 11-21-87

A-C MOTOR PERFORMANCE CURVES

V54959.211

ISSUE DATE 11/21/87

REL S.O. VA-Q3415	RPM 1789	S.F. 1.15	ROTOR 611413-10-TE
FRAME E5010Y	VOLTS 575	NEMA DESIGN Special	TEST S.O. ---
HP 200	AMPS 182	CODE LETTER J	TEST DATE ---
TYPE P	DUTY CONT	ENCLOSURE TEFC-XT	STATOR RES.@ 25°C .0161 OHMS (BETWEEN LINES)
PHASE/HERTZ 3/60	AMB°C/INSUL 40/F	E/S 611452-4-R	

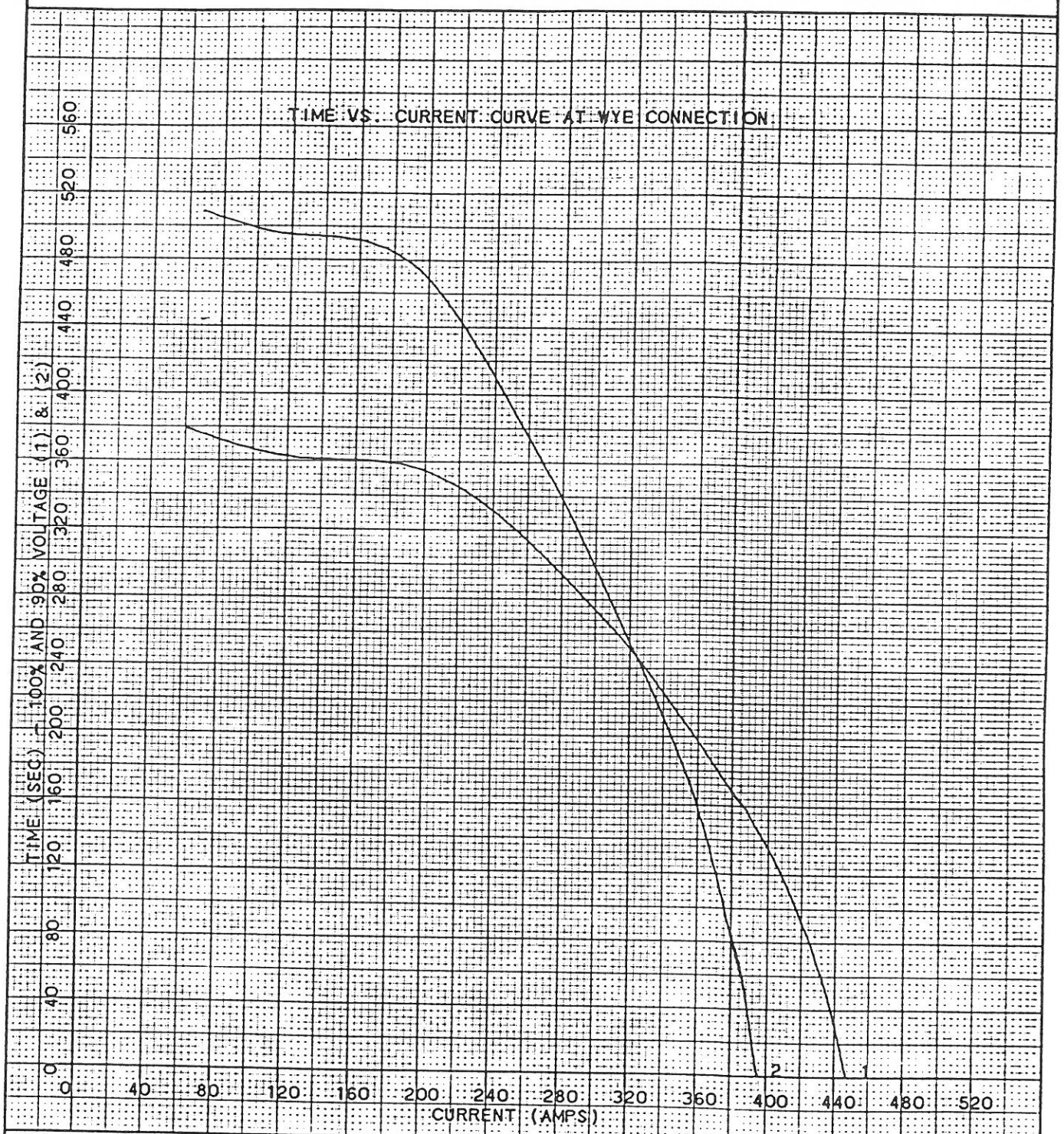

AMPERES SHOWN FOR 575 VOLT CONNECTION, IF OTHER VOLTAGE CONNECTIONS ARE AVAILABLE, THE AMPERES WILL VARY INVERSELY WITH THE RATED VOLTAGE.

RELIANCE ELECTRIC CLEVELAND, OHIO 44117 U.S.A.	DR. BY P.L.HOWER CK. BY J.WACHOB APP. BY F.HEREDOS DATE 11-21-87	A-C MOTOR PERFORMANCE CURVES	V54959.211 ISSUE DATE 11/21/87

REL S.O. VA-Q3415	RPM 1789	S.F. 1.15	ROTOR 611413-10-TE
FRAME E5010Y	VOLTS 575	NEMA DESIGN Special	TEST S.O. ---
HP 200 -	AMPS 182	CODE LETTER J	TEST DATE ---
TYPE P	DUTY CONT	ENCLOSURE TEFC-XT	STATOR RES. @ 25°C .0161
PHASE/HERTZ 3/60	AMB°C/INSUL 40/F	E/S 611452-4-R	OHMS (BETWEEN LINES)

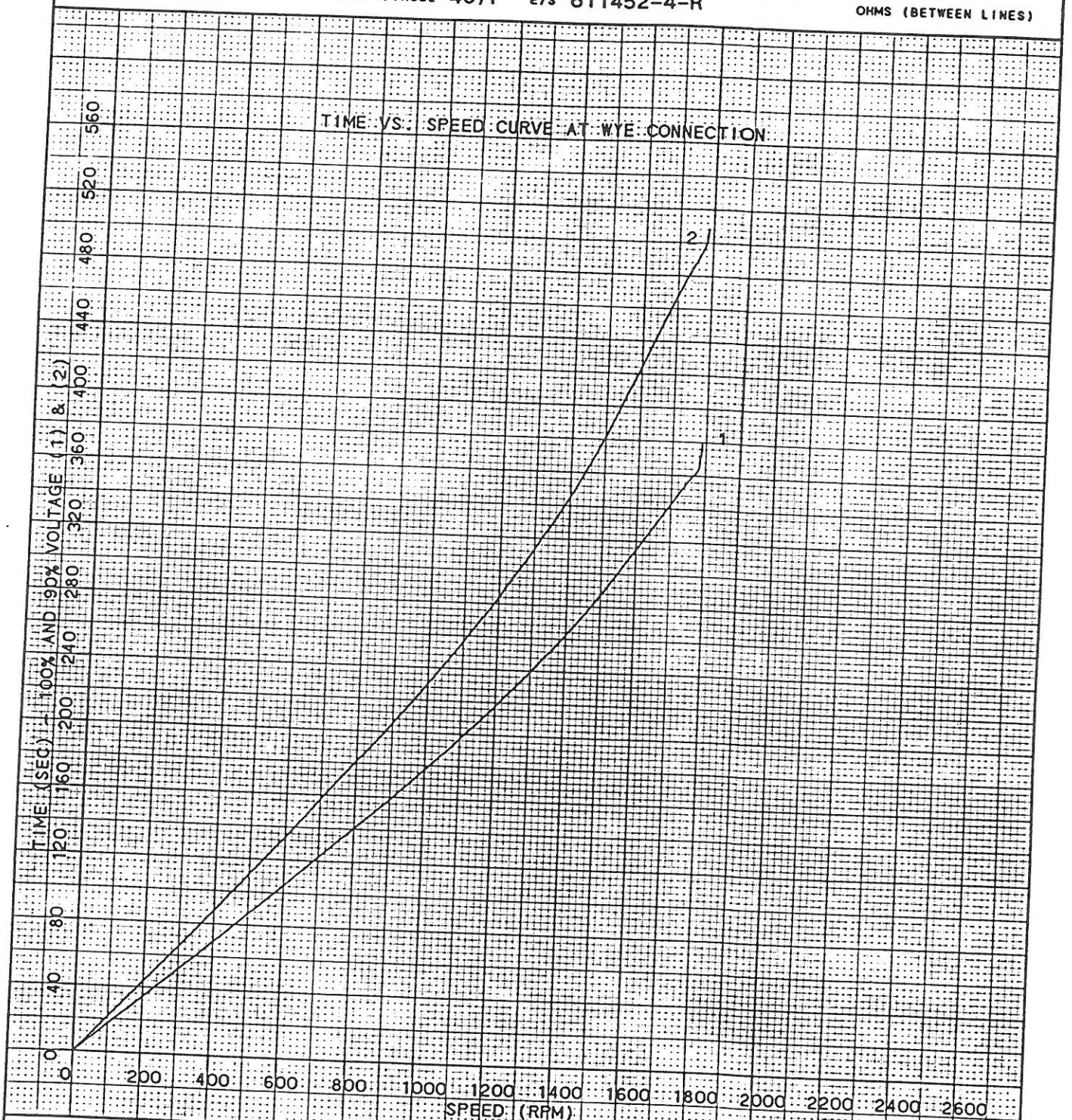

AMPERES SHOWN FOR 575 VOLT CONNECTION. IF OTHER VOLTAGE CONNECTIONS ARE AVAILABLE, THE AMPERES WILL VARY INVERSELY WITH THE RATED VOLTAGE.

RELIANCE ELECTRIC CLEVELAND, OHIO 44117 U.S.A.	DR. BY P.L.HOWER CK. BY J.WACHOB APP. BY F.HEREDOS DATE 11-21-87	A-C MOTOR PERFORMANCE CURVES	V54959.211 ISSUE DATE 11/21/87

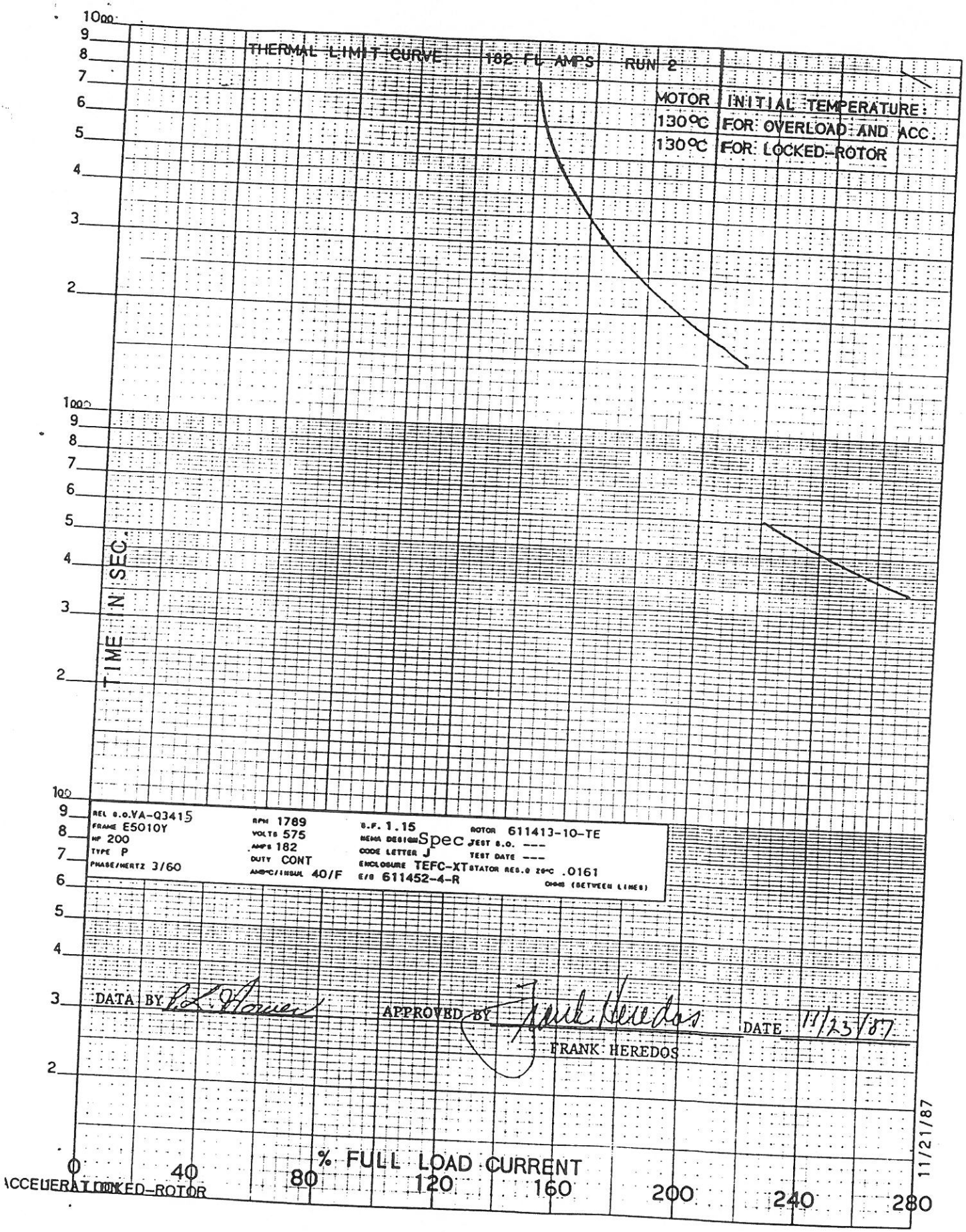
THERMAL LIMIT CURVE 182 FL AMPS RUN 2
MOTOR INITIAL TEMPERATURE:
130°C FOR OVERLOAD AND ACC.
130°C FOR LOCKED-ROTOR
TIME IN SEC.
10000
1000
100
REL S.O.VA-Q3415
FRAME E5010Y
HP 200
TYPE P
PHASE/HERTZ 3/60
RPM 1789
VOLTS 575
AMPS 182
DUTY CONT
AMB°C/INSUL 40/F
S.F. 1.15
NEMA DESIGN Spec
CODE LETTER J
ENCLOSURE TEFC-XT
E/S 611452-4-R
ROTOR 611413-10-TE
TEST S.O. ---
TEST DATE ---
STATOR RES.@ 25°C .0161
OHMS (BETWEEN LINES)
DATA BY
APPROVED BY
DATE 11/23/87
FRANK HEREDOS
11/21/87
% FULL LOAD CURRENT
0
40
80
120
160
200
240
280
ACCELERATION
LOCKED-ROTOR

A-C MOTOR
CONNECTION DIAGRAM

STANDARD 6 LEAD **Y START-DELTA RUN**

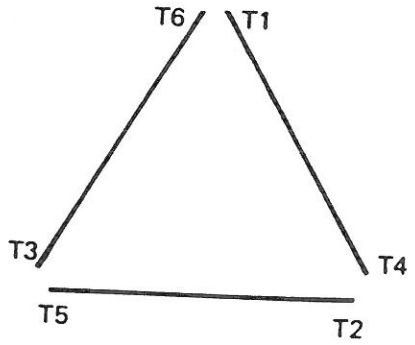

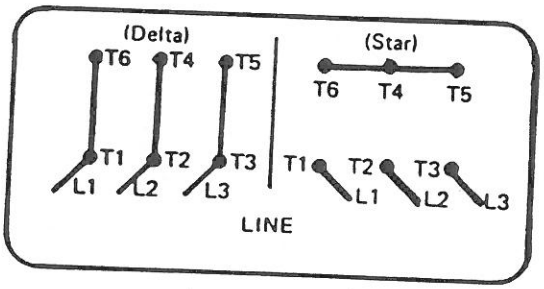

(N.P. 1767-CD)

CUSTOMER _____ CUSTOMER ORDER NO. _____ RELIANCE S.O. NO. _____

C/R

RELIANCE ELECTRIC COMPANY
CLEVELAND, OHIO 44117 U.S.A.

DR. BY NJL
CK. BY DCY
APP. BY HEN
DATE 4/5/76

CONNECTION DIAGRAM **416820-8**
ISSUE DATE JUNE 15, 1976

REL S.O. VA-Q3415
FRAME E5010Y
HP 200
TYPE P
PHASE/HERTZ 3/60

RPM 1789
VOLTS 575
AMPS 182
DUTY CONT
AMB°C/INSUL 40/F

S.F. 1.15
NEMA DESIGN Special
CODE LETTER J
ENCLOSURE TEFC-XT
E/S 611452-4-R

ROTOR 611413-10-TE
TEST S.O. ---
TEST DATE ---
STATOR RES.@ 25°C .0161 OHMS (BETWEEN LINES)

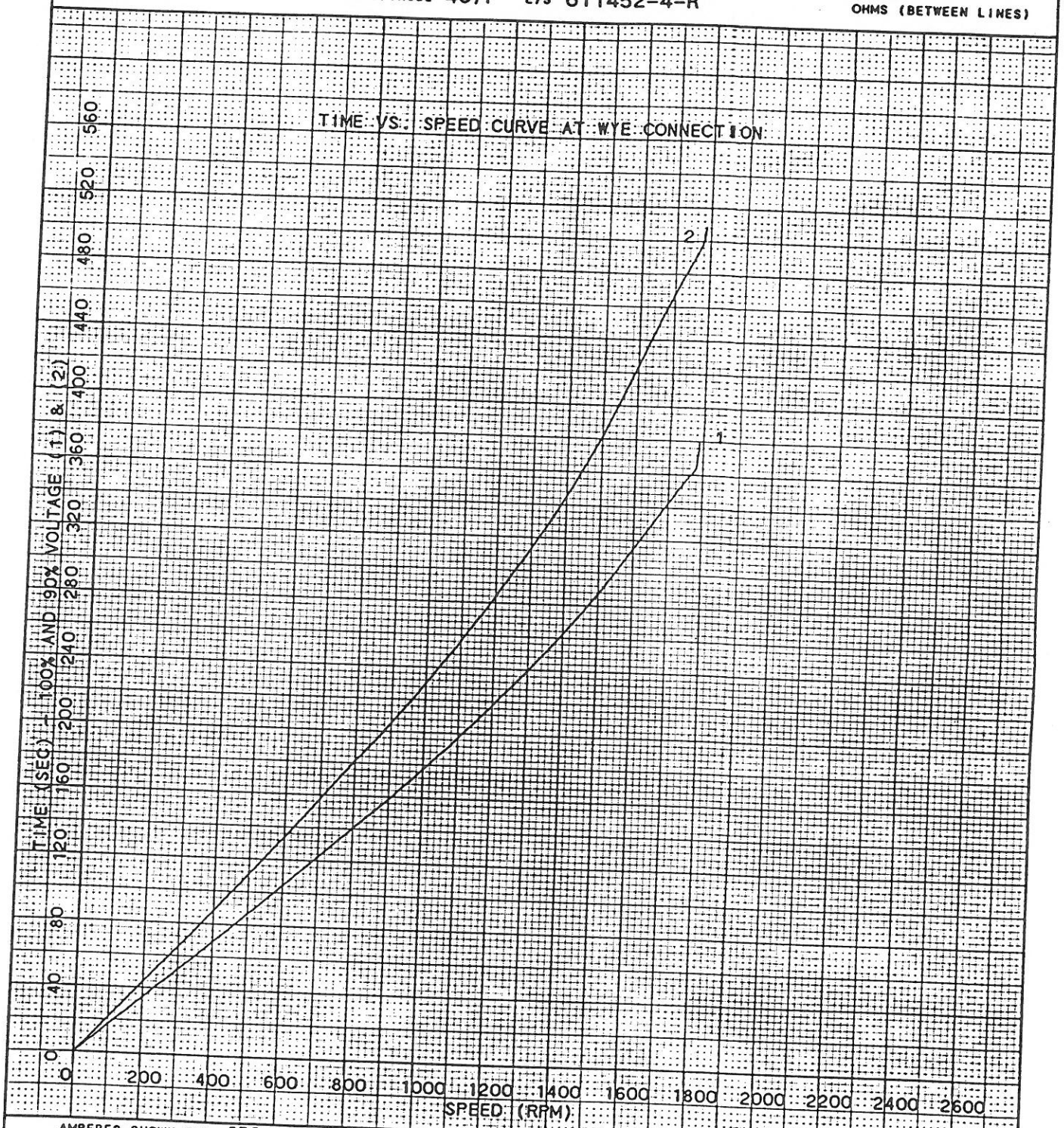

AMPERES SHOWN FOR 575 VOLT CONNECTION, IF OTHER VOLTAGE CONNECTIONS ARE AVAILABLE, THE AMPERES WILL VARY INVERSELY WITH THE RATED VOLTAGE.

RELIANCE ELECTRIC
CLEVELAND, OHIO 44117 U.S.A.

DR. BY P.L. HOWER
CK. BY J. WACHOB
APP. BY F. HEREDOS
DATE 11-21-87

A-C MOTOR PERFORMANCE CURVES

V54959.211

ISSUE DATE 11/21/87

485592/3/4

TYPICAL TEST

RELIANCE ELECTRIC

DATA TRANSMI AND CERTIFICA

REFER TO THIS NU IN ALL CORRESPON

CUSTOMER ORDER NO.	DATE	REQ. NO.	S.O. NO.
PO 52386	10/16/87		00VAQ03414

SOLD TO: PENNWALT CORP
955 MEARNS RD
WARMINSTER PA 18974

SHIP TO: SAME AS "SOLD TO" UNLESS SHOWN
PENNWALT CORP
955 MEARNS RD
WARMINSTER PA 18974

DATA PROVIDED WITH THIS TRANSMITTAL AND CERTIFICATION IS:

- ☐ FOR CUSTOMER APPROVAL BY DATE: _____
  Return of approval prints by the above date is required to assure scheduled shipment, delay in return and/or revision of approval prints may require shipment reschedule. Return approved D/S to data source.
- ☒ FINAL, APPROVED FOR CONSTRUCTION OR INSTALLATION.
- ☐ PRELIMINARY, ENGINEERING IS COMPLETED.
- ☐ REVISED, SUPERSEDES DATA PREVIOUSLY ISSUED.
- ☐ SEE REMARKS.

DATA SOURCE TRANSMITTAL AND CERTIFICATION ISSUED BY: M. Colburn DATE 12-12-87 CK BY P. Hook DATE 12-12
LARGE MOTOR PLANT
101 RELIANCE ROAD
KINGS MOUNTAIN, NC 28086

DATE PRINTED: 12/08/8

MOTOR OR GEN. DATA

ITEM	USED FOR	USERS PLANT	MOTOR OR GEN. D/S: 608980-559
A	CENTRIFUGE		

QTY.	FRAME		HP	SERV. FA	TYPE	R.P.M.	C BOX D/S
3	5010Y	E	200	1.15	P	1800	

PH/HZ/VOLTS-WINDING	DUTY	ENCLOSURE	AMB./INSL.	PWR. CODE	MOTOR OR GEN. C/D:
	CONT	TEFC-XT	40 /F /		

BEARINGS **	MOUNTING & METHOD OF DRIVE	RAILS OR BASE	MODEL NUMBER	REDUCER OR AUX D/S: 416820-8
ROLL	F1 NEMA			

ROTAT FROM OPP. DR. END	D-C FIELD EXCITATION	DOUBLE SHAFT EXTEN.	BRAKE OR AUX. D/S V54959.211 (
CCW			

REDUCER DATA

REDUCER STYLE	CLASS	FRAME	RATIO	OUTPUT RPM	ASSEMBLY	BLOWER MOTOR PH/HZ/VOLTS/HP

BRAKE DATA

BRAKE TYPE	SIZE	RATING	DUTY	P.O.
		FT/LB		

DATA FOR CONTROL

D-C MOTOR ARMATURE CURRENT: _____ AMPS
FIELD CHARACTERISTICS PER CURVE: _____
F_1—F_2, _____ MAX. AMPS _____ _____ RPM
F_{11}—F_{22}, _____ MAX. AMPS _____ _____ RPM
F_3—F_4, _____ MAX. AMPS _____ _____ RPM

A-C MOTOR INFORMATION FOR SELECTION OF STARTER HEATERS:
CODE: J LOCKED AMPS: 1467
F.L. CURRENT: 182 AMPS.

SPCL. INSTALLATION FEAT. AND MISC. DATA

ADDITIONAL MOTOR OR GEN DATA:
PHASE: 3 HERTZ: 60 VOLTS: 575
Lead Location (F1)
Frame Construction - Rigid
WDG PROT QTY 3 DESCRIPTION THERMISTOR, POS TEMP
Grease SRI-2
SPECIAL MARKS:
PART NO. 16-AT-130-CBN
Nema Design - Special
SPECIAL FEATURES:
CLASS B RISE-CSA LABEL-RING TYPE LUGS-6 LEAD WYE DELTA
WR2 LOAD AT MOTOR SHAFT 19,751 LB FT2--WINDAGE & FRICTION
=65 HP--DIR. ROTATION ARROW--WINDING THERMISTORS--PR. CONTR.
SHIP MODEL 135 CONTROL LOOSE .
MOTOR ALWAYS STARTS ON WYE CONN. & ACCEL TO FULL SPEED
BEFORE TRANSITION 85 DBA @ 3 FT-DELY WTD (2) 3/17/88
(1) 4/15/88

* (7) = 2" Pipe Tapped Hole
** Cylindrical Roller Bearing

RE 1805ST2

DUTY MASTER ALTERNATING CURRENT MOTORS

SQUIRREL-CAGE INDUCTION

ENCLOSURE: TOTALLY ENCLOSED FAN COOLED AND X/T LOW NOISE

MOUNTING: FOOT

ANTI-FRICTION BEARINGS

OVERSIZE CONDUIT BOX FOR STRESS CONES

FRAME 5010Y THRU 5012Z

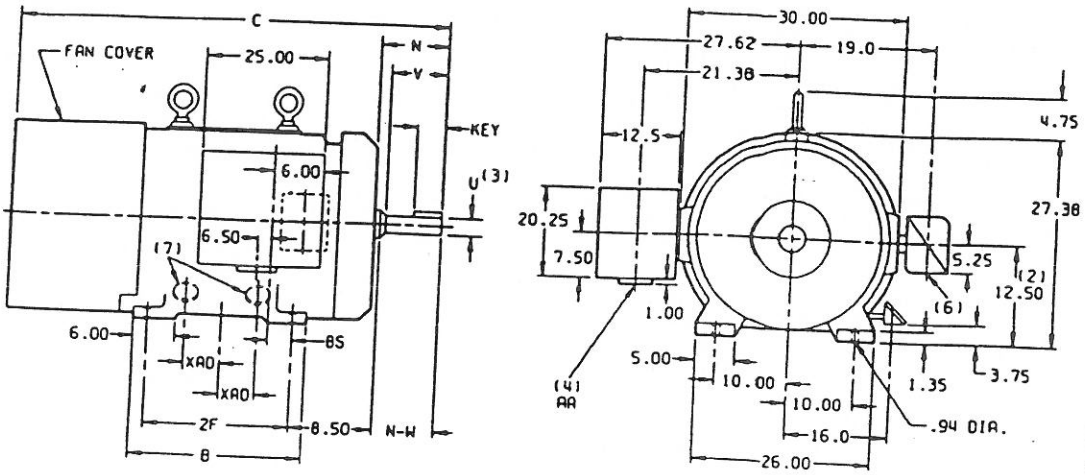

DIMENSIONS ARE IN INCHES

FRAME	DUTY	RPM (MAX.)	C	B	2F	BS	XAD	BACK END SHAFT AND KEY						WT. (LBS.)
								N	N-W	U(3)	V	SQ.	LGTH.	
5010Y	BELTED	1800	79.00	37.75	32.00	5.00	8.25	11.18	11.00	3.750	10.75	.875	8.00	4200
5010Z	COUPLED	1800	75.00	37.75	32.00	5.00	8.25	7.18	7.00	4.125	6.75	1.000	5.00	4200
5010S	COUPLED	3600	75.00	37.75	32.00	5.00	8.25	7.18	7.00	2.375	6.75	.625	4.00	4200
5012Z	COUPLED	1800	83.00	45.75	40.00	5.00	12.25	7.18	7.00	4.125	6.75	1.000	5.00	4500
(1)														

MOTOR CONDUIT BOX "AA"		
MAXIMUM FULL LOAD AMPERES	T.E.F.C.	T.E.F.C. X/T
201	4.0 CONDUIT	4.0 N.P.T.
335	5.0 CONDUIT	5.0 N.P.T.
600	6.0 N.P.T.	6.0 N.P.T.

(1) SPECIAL DIMENSIONS ON THIS LINE.
(2) THIS DIMENSION VARIES +.00 -.06
(3) THIS DIMENSION VARIES +.000 -.001
(4) "AA" VARIES WITH F.L. AMPS. SEE TABLE.
(5) WALL OR OBSTRUCTION MUST NOT ENCROACH ON AIR INLET SPACE.
(6) 2" N.P.T. FOR WINDING TEMPERATURE DETECTOR LEADS. WHEN ORDERED.
(7) 3/4 N.P.T. FOR BEARING TEMPERATURE DETECTOR LEADS. WHEN ORDERED.

CONDUIT BOX CAN BE ROTATED 360° IN 90° STEPS. A/F BRGS.. CONDUIT BOX LOCATED ON OPPOSITE SIDE WHEN F-2.W-1.W-4.W-5. W-7 OR C-1 MOUNTING IS SPECIFIED.

IF MOUNTING CLEARANCE DETAILS ARE REQUIRED. CONSULT FACTORY.

MAXIMUM PERMISSIBLE SHAFT RUNOUT WHEN MEASURED AT END OF STD. SHAFT EXTENSION IS .003 T.I.R.

FRAME- _____ TYPE- _____ CERTIFIED FOR- _____

ORDER- _____ ITEM- _____ HP- _____ RPM- _____ PH- _____ HZ- _____ VOLTS _____

RELIANCE SALES ORDER- _____ APPROVED BY- _____ DATE _____

RELIANCE ELECTRIC
CLEVELAND, OHIO 44117 U.S.A.

DR. BY E.JAMBOR
CK. BY C.BLALOCK
APP. BY W.L.SUBLER
DATE 12-8-87

DIMENSION SHEET

608980-559

ISSUE DATE DECEMBER 8, 1987

C/R

ENG. REF. S.O.-YA003414 & 3415

REL. S.O.	FRAME	HP	TYPE	PHASE/ HERTZ	RPM	VOLTS
VA-Q3414	E5010Y	200	P	3/60	1789	575

AMPS	DUTY	AMB°C/ INSUL.	S.F.	NEMA DESIGN	CODE LETTER	ENCL.
182	CONT	40/F	1.15	Special	J	TEFC-XT

E/S	ROTOR	TEST S.O.	TEST DATE	STATOR RES.@25°C OHMS (BETWEEN LINES)
611452-4-R	611413-10-TE	---	---	.0161

PERFORMANCE

LOAD	HP	AMPERES	RPM	% POWER FACTOR	% EFFICIENCY
NO LOAD	0	55.6	1800	8.37	0
1/4	50.0	74.1	1797	57.2	88.5
2/4	100	106	1795	76.1	93.2
3/4	150	142	1792	83.9	94.6
4/4	200	182	1789	86.7	95.1
5/4	250	225	1786	87.5	95.1

SPEED TORQUE

	RPM	TORQUE % FULL LOAD	TORQUE LB.-FT.	AMPERES
LOCKED ROTOR WYE CONNECTION	0	71	401	447
PULL UP WYE CONNECTION	0	77	401	446
BREAKDOWN WYE CONNECTION	1740	81	461	194
FULL LOAD DELTA CONNECTION	1789	100	587	182

AMPERES SHOWN FOR 575. VOLT CONNECTION. IF OTHER VOLTAGE CONNECTIONS ARE AVAILABLE, THE AMPERES WILL VARY INVERSELY WITH THE RATED VOLTAGE

REMARKS: CALCULATED DATA AT DELTA CONNECTION EXCEPT AS NOTED.

RELIANCE ELECTRIC
CLEVELAND, OHIO 44117 U.S.A.

DR. BY P.L.HOWER
CK. BY J.WACHOB
APP. BY F.HEREDOS
DATE 11-21-87

A-C MOTOR PERFORMANCE DATA

V54959.211

ISSUE DATE 11/21/87

REL S.O. VA-Q3414
FRAME E5010Y
HP 200 -
TYPE P
PHASE/HERTZ 3/60

RPM 1789
VOLTS 575
AMPS 182
DUTY CONT
AMB°C/INSUL 40/F

S.F. 1.15
NEMA DESIGN Special
CODE LETTER J
ENCLOSURE TEFC-XT
E/S 611452-4-R

ROTOR 611413-10-TE
TEST S.O. ---
TEST DATE ---
STATOR RES. @ 25°C .0484 OHMS (BETWEEN LINES)

CALCULATED DATA AT WYE CONNECTION

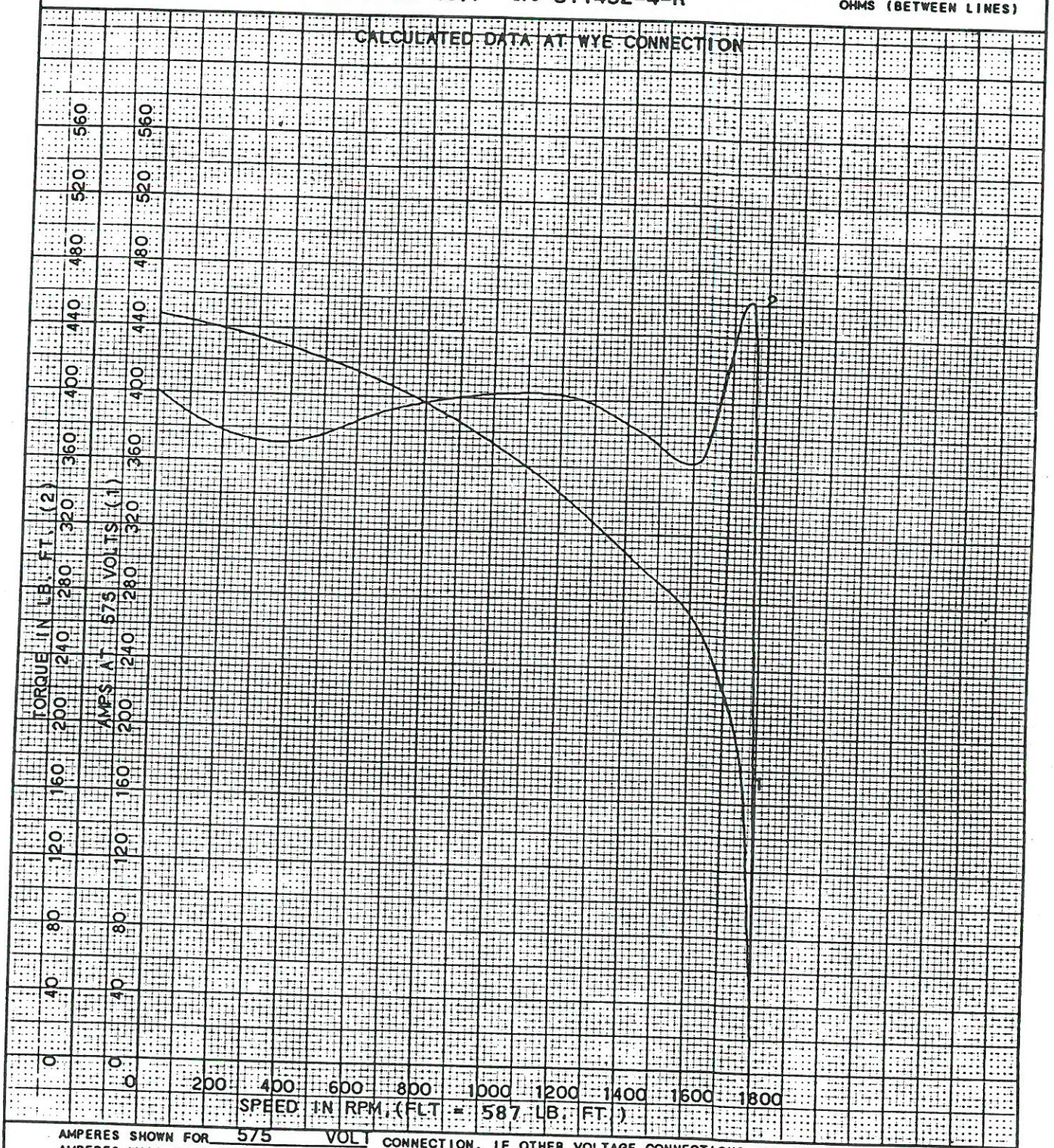

AMPERES SHOWN FOR 575 VOLT CONNECTION. IF OTHER VOLTAGE CONNECTIONS ARE AVAILABLE, THE AMPERES WILL VARY INVERSELY WITH THE RATED VOLTAGE.

RELIANCE ELECTRIC
CLEVELAND, OHIO 44117 U.S.A.

DR. BY P.L.HOWER
CK. BY J.WACHOB
APP. BY F.HEREDOS
DATE 11-21-87

A-C MOTOR PERFORMANCE CURVES

V54959.211

ISSUE DATE 11/21/87

REL S.O. VA-Q3414
FRAME E5010Y
HP 200 -
TYPE P
PHASE/HERTZ 3/60

RPM 1789
VOLTS 575
AMPS 182
DUTY CONT
AMB°C/INSUL 40/F

S.F. 1.15
NEMA DESIGN Special
CODE LETTER J
ENCLOSURE TEFC-XT
E/S 611452-4-R

ROTOR 611413-10-TE
TEST S.O. ---
TEST DATE ---
STATOR RES. @ 25°C .0161 OHMS (BETWEEN LINES)

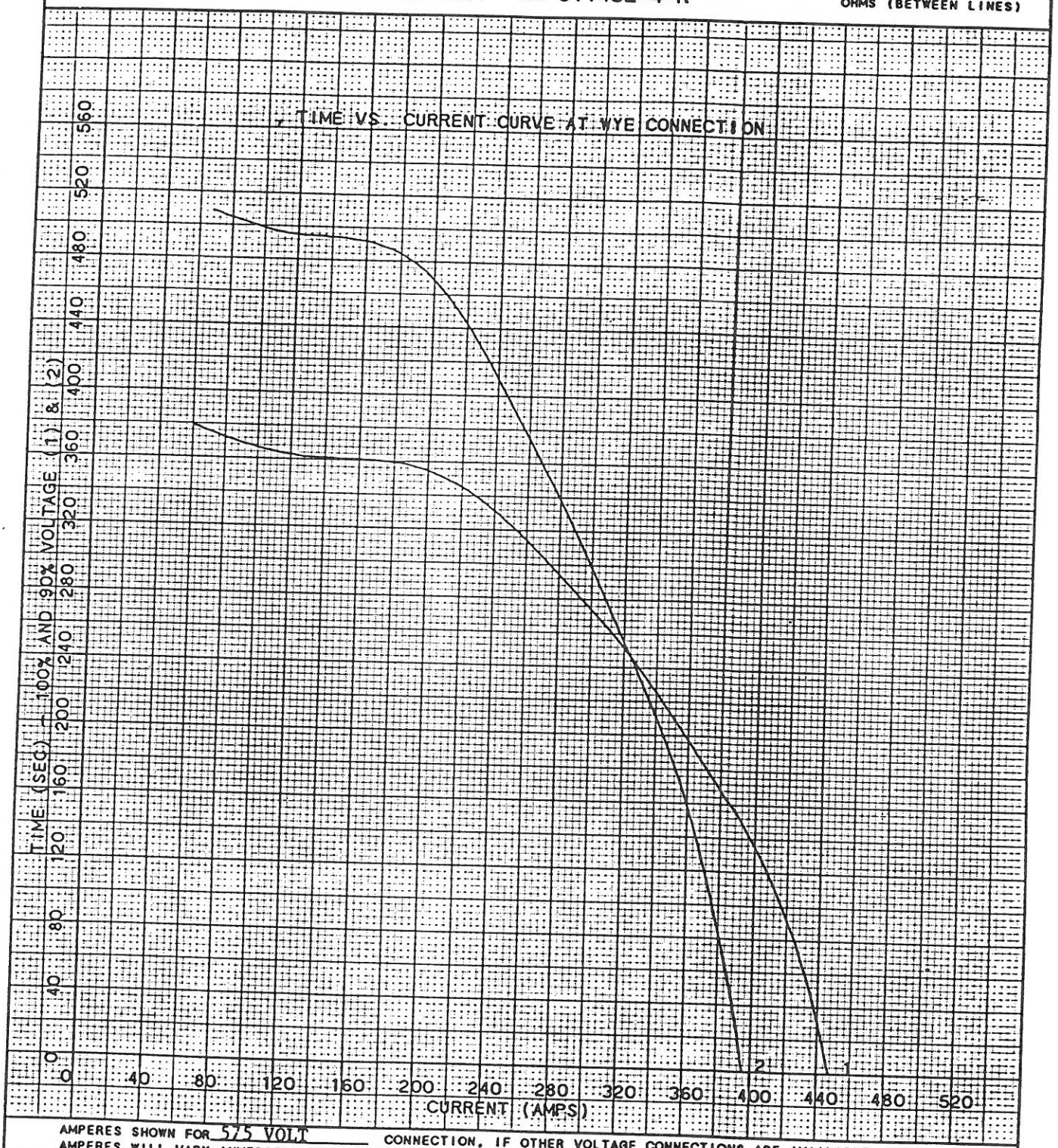

AMPERES SHOWN FOR 575 VOLT CONNECTION, IF OTHER VOLTAGE CONNECTIONS ARE AVAILABLE, THE AMPERES WILL VARY INVERSELY WITH THE RATED VOLTAGE.

RELIANCE ELECTRIC
CLEVELAND, OHIO 44117 U.S.A.

DR. BY P.L. HOWER
CK. BY J. WACHOB
APP. BY F. HEREDOS
DATE 11-21-87

A-C MOTOR PERFORMANCE CURVES

V54959.211

ISSUE DATE 11/21/87

REL S.O. VA-Q3414
FRAME E5010Y
HP 200
TYPE P
PHASE/HERTZ 3/60

RPM 1789
VOLTS 575
AMPS 182
DUTY CONT
AMB°C/INSUL 40/F

S.F. 1.15
NEMA DESIGN Special
CODE LETTER J
ENCLOSURE TEFC-XT
E/S 611452-4-R

ROTOR 611413-10-TE
TEST S.O. ---
TEST DATE ---
STATOR RES. @ 25°C .0161 OHMS (BETWEEN LINES)

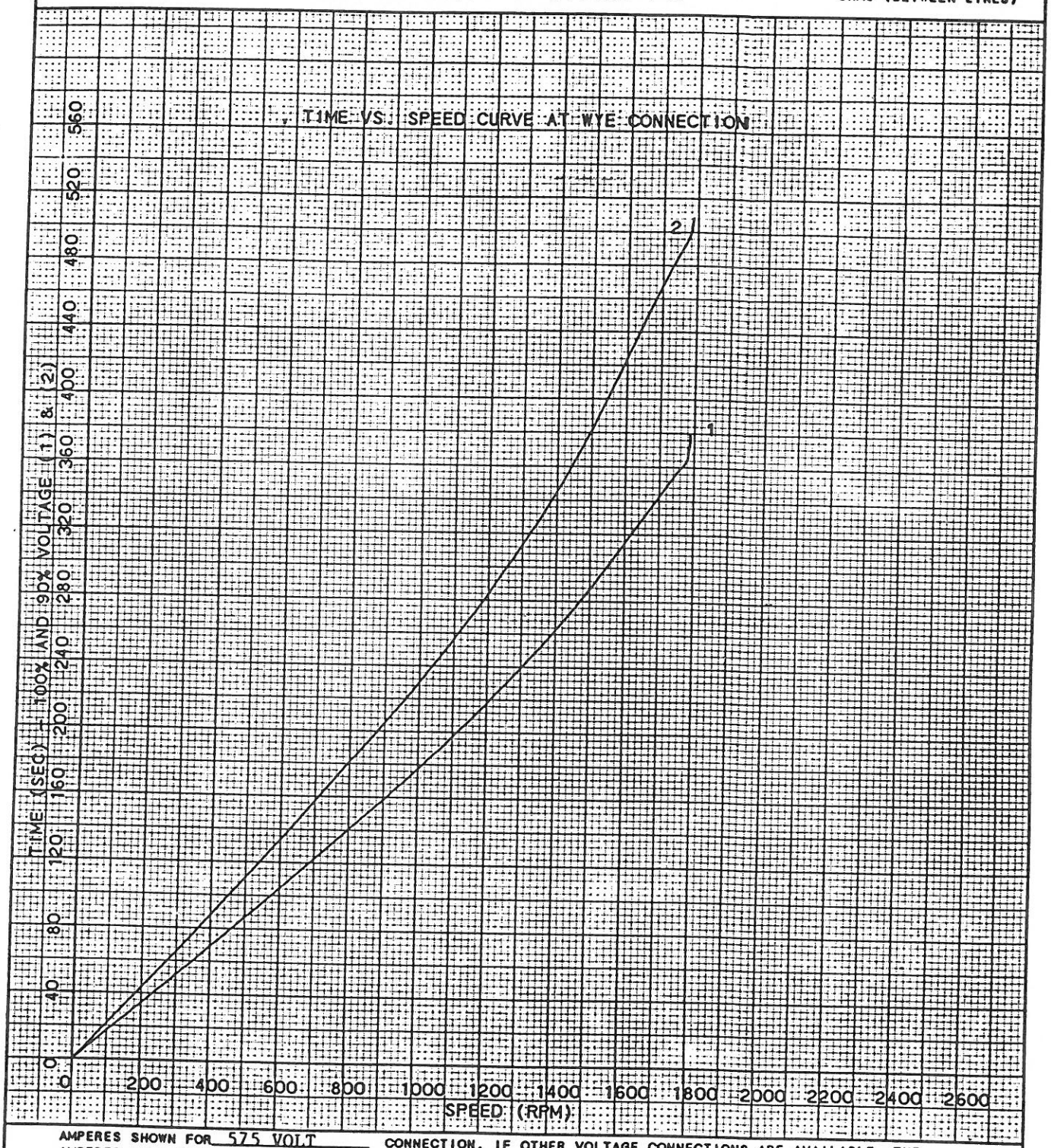

AMPERES SHOWN FOR 575 VOLT CONNECTION. IF OTHER VOLTAGE CONNECTIONS ARE AVAILABLE, THE AMPERES WILL VARY INVERSELY WITH THE RATED VOLTAGE.

RELIANCE ELECTRIC
CLEVELAND, OHIO 44117 U.S.A.

DR. BY P.L. HOWER
CK. BY J. WACHOB
APP. BY F. HEREDOS
DATE 11-21-87

A-C MOTOR PERFORMANCE CURVES

V54959.211

ISSUE DATE 11/21/87

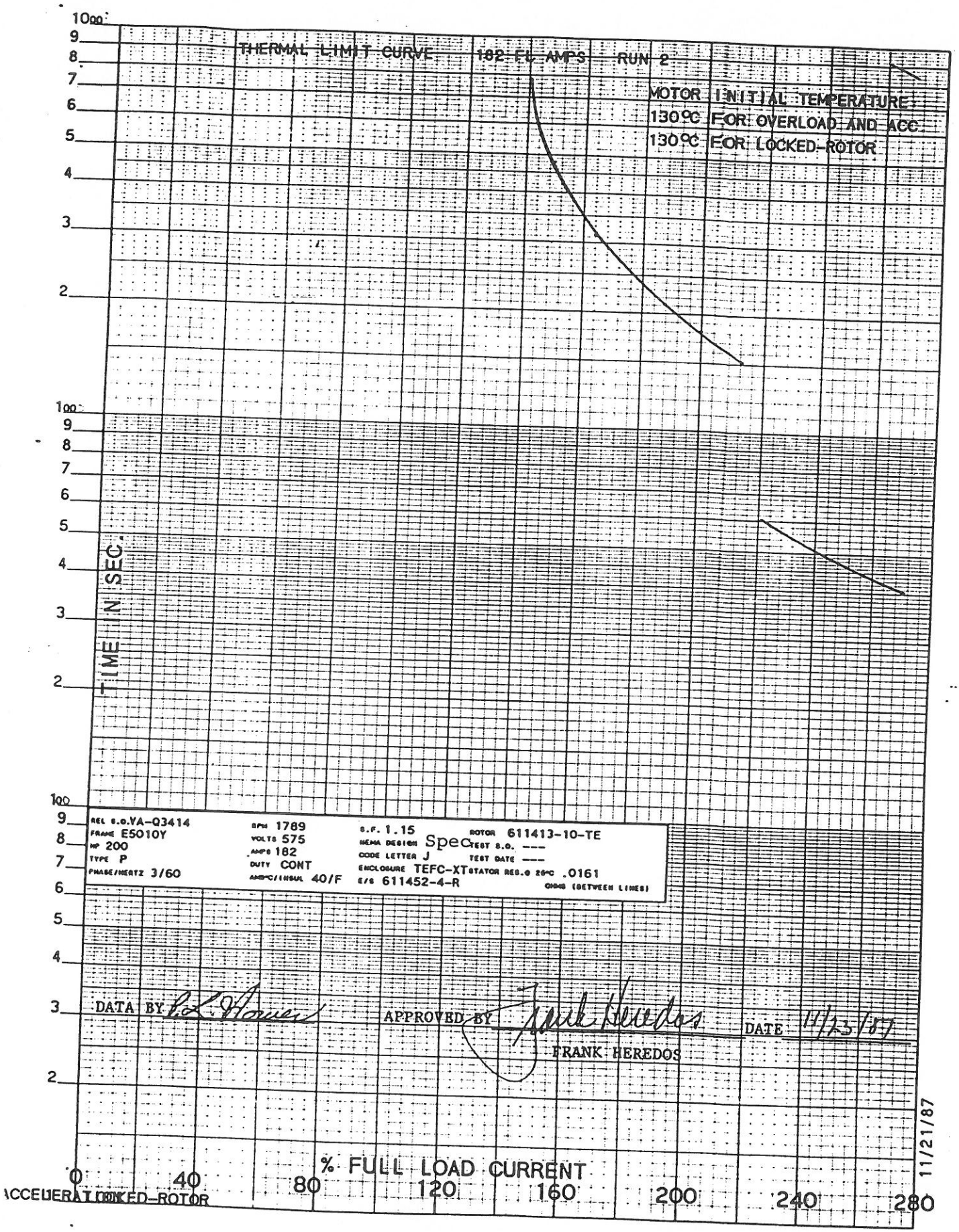
THERMAL LIMIT CURVE 182 FL AMPS RUN 2
MOTOR INITIAL TEMPERATURE:
130°C FOR OVERLOAD AND ACC.
130°C FOR LOCKED-ROTOR
TIME IN SEC.
1000
100
10
1
REL S.O. VA-Q3414
FRAME E5010Y
HP 200
TYPE P
PHASE/HERTZ 3/60
RPM 1789
VOLTS 575
AMPS 182
DUTY CONT
AMB°C/INSUL 40/F
S.F. 1.15
NEMA DESIGN Spec
CODE LETTER J
ENCLOSURE TEFC-XT
E/S 611452-4-R
ROTOR 611413-10-TE
TEST S.O. ---
TEST DATE ---
STATOR RES.@ 25°C .0161
OHMS (BETWEEN LINES)
DATA BY
APPROVED BY
DATE 11/23/87
FRANK HEREDOS
% FULL LOAD CURRENT
0
40
80
120
160
200
240
280
ACCELERATION
LOCKED-ROTOR
11/21/87

A-C MOTOR
CONNECTION DIAGRAM

STANDARD 6 LEAD **Y START-DELTA RUN**

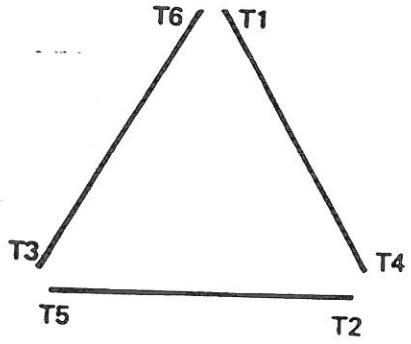

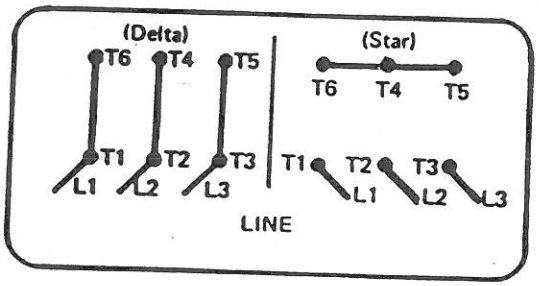

(N.P. 1767-CD)

CUSTOMER _____ CUSTOMER ORDER NO. _____ RELIANCE S.O. NO. _____

C/R

RELIANCE ELECTRIC COMPANY
CLEVELAND, OHIO 44117 U.S.A.

DR. BY _____
CK. BY DLY
APP. BY _____
DATE 4/5/76

CONNECTION DIAGRAM **416820-8**
ISSUE DATE JUNE 15, 1976

ACTUAL

TEST

RELIANCE ELECTRIC

DATA TRANSMITTAL AND CERTIFICATION

REFER TO THIS NUMBER IN ALL CORRESPONDENCE

CUSTOMER ORDER NO.	DATE	REQ. NO.	S.O. NO.
PO 56308	06/28/88		00VEQ03844

SOLD TO: PENNWALT CORP
955 MEARNS RD
WARMINSTER PA 18974

SHIP TO: SAME AS "SOLD TO" UNLESS SHOWN
PENNWALT CORP
955 MEARNS RD
WARMINSTER PA 18974

DATA PROVIDED WITH THIS TRANSMITTAL AND CERTIFICATION IS:

- ☐ FOR CUSTOMER APPROVAL BY DATE: _____
  Return of approval prints by the above date is required to assure scheduled shipment, delay in return and/or revision of approval prints may require shipment reschedule. Return approved D/S to data source.
- ☐ FINAL, APPROVED FOR CONSTRUCTION OR INSTALLATION.
- ☐ PRELIMINARY, ENGINEERING IS COMPLETED.
- ☐ REVISED, SUPERSEDES DATA PREVIOUSLY ISSUED.
- ☒ SEE REMARKS.

DATA SOURCE TRANSMITTAL AND CERTIFICATION ISSUED BY: M.C. Colburn DATE 7-20-88 CK BY A. Hooton DATE 7-20-88
LARGE MOTOR PLANT
101 RELIANCE ROAD
KINGS MOUNTAIN, NC 28086

DATE PRINTED: 07/18/88

MOTOR OR GEN. DATA

ITEM	USED FOR						MOTOR OR GEN. D/S:
1	USERS PLANT						
QTY. 1	FRAME PART		SERV. FA	TYPE	R.P.M.		C BOX D/S
PH/HZ/VOLTS-WINDING	DUTY	ENCLOSURE	AMB./INSL.	PWR. CODE			MOTOR OR GEN. C/D:
BEARINGS	MOUNTING & METHOD OF DRIVE	RAILS OR BASE	MODEL NUMBER				REDUCER OR AUX D/S:
ROTAT FROM OPP. DR. END	D-C FIELD EXCITATION	DOUBLE SHAFT EXTEN.					BRAKE OR AUX. D/S

REDUCER DATA

REDUCER STYLE	CLASS	FRAME	RATIO	OUTPUT RPM	ASSEMBLY	BLOWER MOTOR PH/HZ/VOLTS/HP

BRAKE DATA

BRAKE TYPE	SIZE	RATING FT/LB	DUTY	P.O.

DATA FOR CONTROL

D-C MOTOR ARMATURE CURRENT: _____ AMPS
FIELD CHARACTERISTICS PER CURVE: _____
F_1—F_2, _____ MAX. AMPS _____ _____ RPM
F_{11}—F_{22}, _____ MAX. AMPS _____ _____ RPM
F_3—F_4, _____ MAX. AMPS _____ _____ RPM

A-C MOTOR INFORMATION FOR SELECTION OF STARTER HEATERS:
CODE: _____ LOCKED AMPS: _____
F.L. CURRENT: _____ AMPS.

SPCL. INSTALLATION FEAT. AND MISC. DATA

ADDITIONAL MOTOR OR GEN DATA:
PHASE: HERTZ: VOLTS:

SPECIAL FEATURES:
PERFORM SPECIAL WITNESS TEST ON ID # VAQ03414

CERTIFIED DRAWINGS AND DATA:
(5) T/R TO SOLD TO ADDRESS--
ATTN: J. D. KEATING
CC 18140

Remarks:
Test Report added.

RE 1805ST2

54959

RELIANCE ELECTRIC

24701 Euclid Avenue, Cleveland, Ohio 44117

REPORT OF TEST
For Induction Motor

Purchaser: PENNWALT CORPORATION
955 MEARNS ROAD
WARMINSTER, PA. 18974

Date of Test 7/12/88
Purchaser's Order No. 52386
Serial No. VAQ-03414-A1

Nameplate Rating

Rated HP	Service Factor	Rated Speed r/min	Phase	Frequency Hz	Volts	Amperes	Type	Frame
200	1.15	1800	3	60	575	182	P	E5010Y

Temperature Rise

Conditions of Test				Temperature Rise °C					
				Stator		Rotor			
				Windings			Windings		
Hours Run	Line Volts	Line Amperes	Cooling Air, °C	°By RES. Method	°By ----- Method	------	°By ----- Method		
6.25	576	229	25	74.9	---	---	---	229 HP	

Characteristics

Rated Slip, Percent	No-Load Line Current, amperes	Secondary Volts at Standstill	Secondary Amperes per Ring at Rated Load	Resistance at 25°C (between lines) ohms
.57	54.2	----------	--------	Prim. .0175 Sec. --------

Torque and Starting Current

Break-Down Torque in LB.-FT. ** with 49 % volts applied	Locked-Rotor Torque in LB.FT. ** with 100 % volts applied	Starting Current Amperes (locked rotor) with 100 % volts applied
328	1666	1359

High Potential Tests

Volts a-o for 60 Sec	
Stator	Rotor
2150	---

Efficiencies and Power Factor

Efficiency, Percent			Power Factor, Percent		
Rated Load	75 Percent Load	50 Percent Load	Rated Load	75 Percent Load	50 Percent Load
94.1	93.5	91.7	85.3	83.0	76.7

Notes: DATA BY R.L. Power CHECKED BY L. Wachob

Data from test on THIS (this or duplicate) motor. TEST DATA FOR DELTA CONNECTED STATOR

*Indicate method as:
Thermometer
Thermocouple
Resistance
Embedded Detector

**Indicate torque units as N-m or lb-ft

SHEET 1 OF 2

Approved by Frank Heredos FRANK HEREDOS Date 7-15-88

54959

RELIANCE ELECTRIC

24701 Euclid Avenue, Cleveland, Ohio 44117

REPORT OF TEST
For Induction Motor

Purchaser: PENNWALT CORPORATION
955 MEARNS ROAD
WARMINSTER, PA. 18974

Date of Test 7/12/88

Purchaser's Order No. 52386

Serial No. VAQ-03414-A1

Nameplate Rating

Rated HP	Service Factor	Rated Speed r/min	Phase	Frequency Hz	Volts	Amperes	Type	Frame
200	1.15	1800	3	60	575	182	P	E5010Y

Temperature Rise

Conditions of Test				Temperature Rise °C					
				Stator		Rotor			
				Windings			Windings		
Hours Run	Line Volts	Line Amperes	Cooling Air, °C	°By ---- Method	°By ----- Method	------	°By ----- Method		
----	----	---	---	----	---	---	---	------	-

Characteristics

Rated Slip, Percent	No-Load Line Current, amperes	Secondary Volts at Standstill	Secondary Amperes per Ring at Rated Load	Resistance at 25°C (between lines) ohms
-------	---------	----------	--------	Prim. .0524
				Sec. --------

Torque and Starting Current

Break-Down Torque in LB.-FT. ** with 100 % volts applied	Locked-Rotor Torque in LB.FT. ** with 100 % volts applied	Starting Current Amperes (locked rotor) with 100 % volts applied
451	466	476

High Potential Tests

Volts a-c for 60 Sec	
Stator	Rotor
2150	---

Efficiencies and Power Factor

Efficiency, Percent			Power Factor, Percent		
Rated Load	75 Percent Load	50 Percent Load	Rated Load	75 Percent Load	50 Percent Load
--------	---------	--------	--------	--------	--------

Notes: DATA BY P.L. Power CHECKED BY J.W. Acklob

Data from test on THIS (this or duplicate) motor. TEST DATA FOR WYE CONNECTED STATOR

*Indicate method as:
Thermometer
Thermocouple
Resistance
Embedded Detector

**Indicate torque units as N-m or lb-ft

SHEET 2 OF 2

Approved by Frank Heredos FRANK HEREDOS Date 7-15-88

RELIANCE ELECTRIC

54959

24701 Euclid Avenue, Cleveland, Ohio 44117

REPORT OF ROUTINE TESTS
For Induction Motor

Purchaser:
PENNWALT CORPORATION
955 MEARNS ROAD
WARMINSTER, PA. 18974

Date of Test 3/31/88

Manufacturer's Order No. YAQ-03414

Purchaser's Order No. 52386

Nameplate Data

Rated HP	Service Factor	Rated Speed RPM	Phase	Frequency Hz	Volts	Amperes
200	1.15	1800	3	60	575	182

Type	Frame	(Temp Rise By) (Method Indicated)	(Ambient Temp &) (Insulation Class)	Time Rating	Design Letter	Code Letter For Locked kVA/hp
P	E5010Y	115C R/R	40C/F	CONT	P	J

Test Characteristics

Serial No.	No Load					Locked Rotor					Wound Rotor Open-Circuit Voltage	● High Potential Test Voltage	Stator Winding Resistance Between Terminals	
	Volts	Frequency Hz	Speed r/min	Amperes	Kilowatts*	Volts	Frequency Hz	Amperes	Kilowatts*	TORQ LbFt			Ohms	Temperature °C
A2	575	60	1800	55.6	5.8	288	60	717	105	322	N/A	2150	.0175	23
A3	575	60	1800	55.3	4.5	290	60	722	103	320	N/A	2150	.0174	24

* If measured, optional:
Notes: ● For 60 seconds.

TEST DATA FOR DELTA CONNECTED STATOR

DATA BY P.L. Hauer CHECKED BY J. WACKOB

Data on test from THIS motor.
(This or Duplicate)

Approved by Frank Heredos Date 7-15-88
FRANK HEREDOS

REL S.O. VA-Q3414	RPM 1789	S.F. 1.15	ROTOR 611413-10-TE
FRAME E5010Y	VOLTS 575	NEMA DESIGN -	TEST S.O. VA-Q3414-A1
HP 200	AMPS 182	CODE LETTER J	TEST DATE 7-11-88
TYPE P -	DUTY CONT	ENCLOSURE TEFC-XT	STATOR RES.@ 25°C .0174 / .0523 OHMS (BETWEEN LINES)
PHASE/HERTZ 3/60	AMB°C/INSUL 40/F	E/S 611452-4-R	

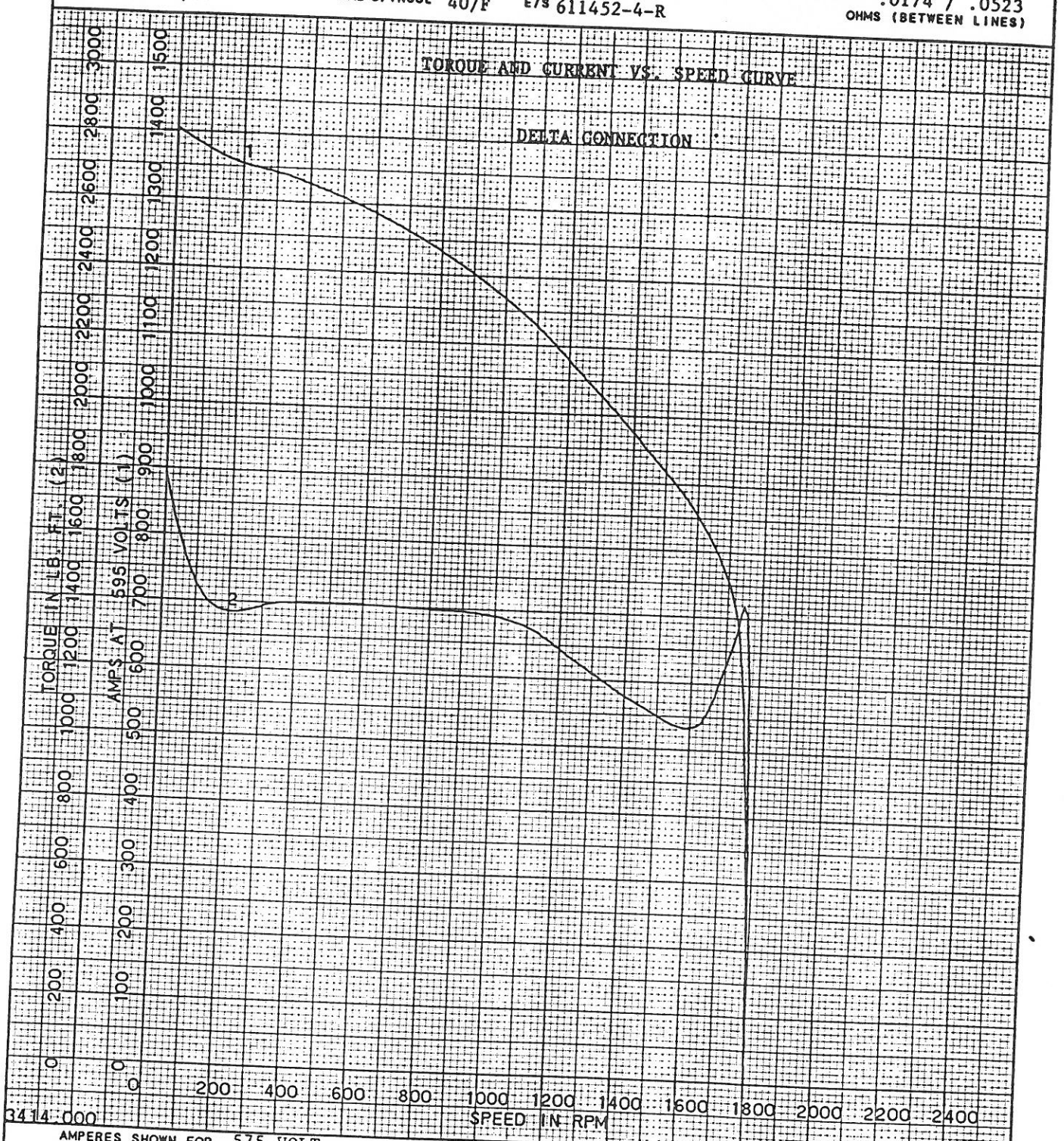

3414.000

AMPERES SHOWN FOR 575 VOLT CONNECTION. IF OTHER VOLTAGE CONNECTIONS ARE AVAILABLE, THE AMPERES WILL VARY INVERSELY WITH THE RATED VOLTAGE.

07/13/88

RELIANCE ELECTRIC
CLEVELAND, OHIO 44117 U.S.A.

DR. BY P.L.HOWER
CK. BY J WACHOR
APP. BY F.HEREDOS
DATE 7-15-88

A-C MOTOR PERFORMANCE CURVES

V54959.TST1

ISSUE DATE 7/15/88

File N57241

REL S.O. VA-Q3414	RPM 1789	S.F. 1.15	ROTOR 611413-10-TE
FRAME E5010Y	VOLTS 575	NEMA DESIGN -	TEST S.O. VA-Q3414-A1
HP 200	AMPS 182	CODE LETTER J	TEST DATE 7-11-88
TYPE P -	DUTY CONT	ENCLOSURE TEFC-XT	STATOR RES.@ 25°C .0174 / .0523 OHMS (BETWEEN LINES)
PHASE/HERTZ 3/60	AMB°C/INSUL 40/F	E/S 611452-4-R	

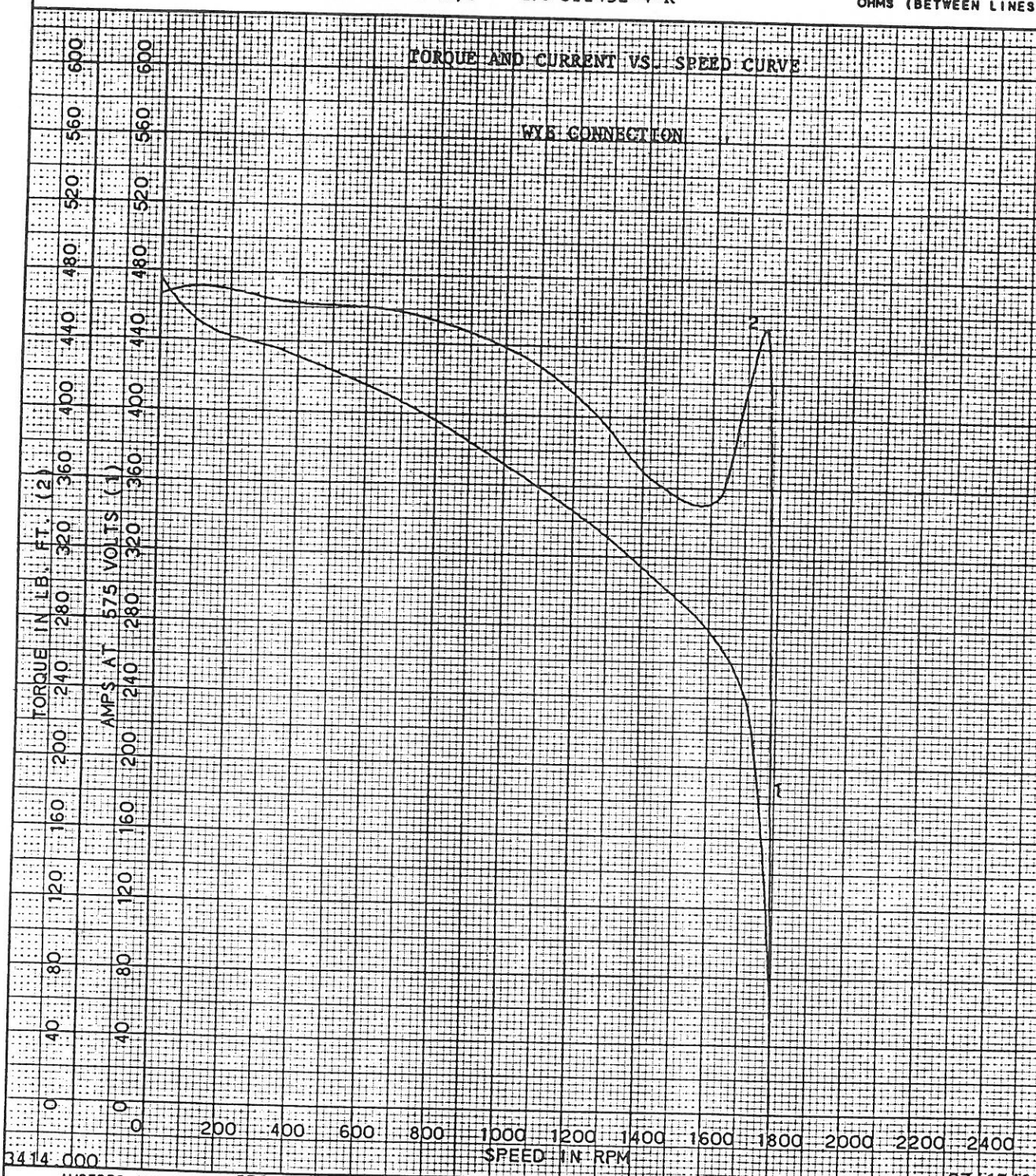

3414.000 07/13/88

AMPERES SHOWN FOR 575 VOLT CONNECTION. IF OTHER VOLTAGE CONNECTIONS ARE AVAILABLE, THE AMPERES WILL VARY INVERSELY WITH THE RATED VOLTAGE.

RELIANCE ELECTRIC
CLEVELAND, OHIO 44117 U.S.A.

DR. BY P.L. HOWER
CK. BY J. WACHOB
APP. BY F. HEREDOS
DATE 7-15-88

A-C MOTOR PERFORMANCE CURVES

V54959.TST1

ISSUE DATE 7/15/88

File N57237

REL S.O. VA-Q3414	RPM 1789	S.F. 1.15	ROTOR 611413-10-TE
FRAME E5010Y	VOLTS 575	NEMA DESIGN --	TEST S.O. VA-Q3414-A1
HP 200	AMPS 182	CODE LETTER J	TEST DATE 7-11-88
TYPE P	DUTY CONT	ENCLOSURE TEFC-XT	STATOR RES.@ 25°C .0174 / .0523 OHMS (BETWEEN LINES)
PHASE/HERTZ 3/60	AMB°C/INSUL 40/F	E/S 611452-4-R	

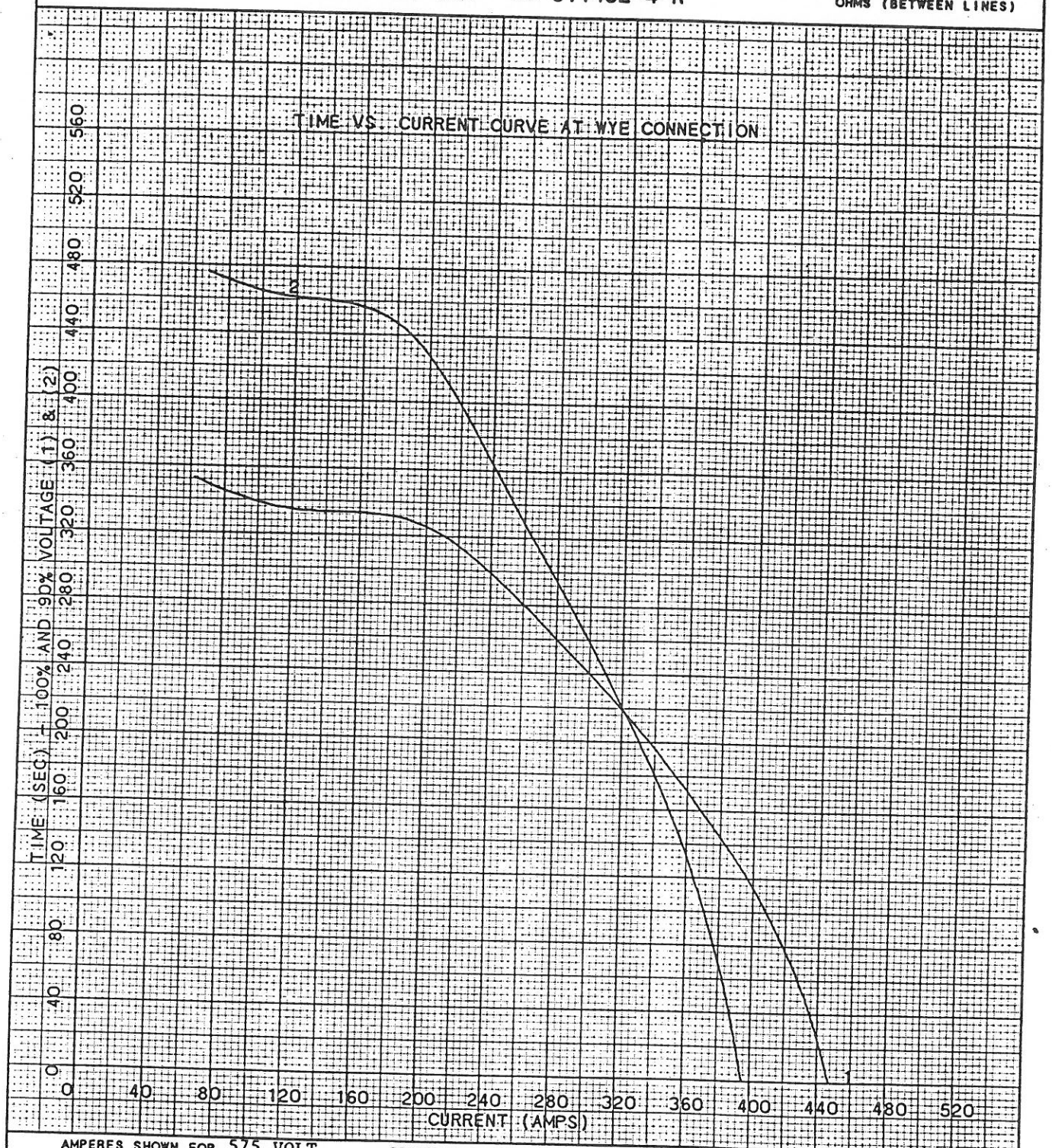

AMPERES SHOWN FOR 575 VOLT CONNECTION. IF OTHER VOLTAGE CONNECTIONS ARE AVAILABLE, THE AMPERES WILL VARY INVERSELY WITH THE RATED VOLTAGE.

RELIANCE ELECTRIC
CLEVELAND, OHIO 44117 U.S.A.

DR. BY P.L. HOWER
CK. BY J. WACHOB
APP. BY F. HEREDOS
DATE 7-15-88

A-C MOTOR PERFORMANCE CURVES

V54959.TST1

ISSUE DATE 7/15/88

File G75111

REL S.O. VA-Q3414	RPM 1789	S.F. 1.15	ROTOR 611413-10-TE
FRAME E5010Y	VOLTS 575	NEMA DESIGN --	TEST S.O. VA-Q3414-A1
HP 200	AMPS 182	CODE LETTER J	TEST DATE 7-11-88
TYPE P	DUTY CONT	ENCLOSURE TEFC-XT	STATOR RES.@ 25°C .0174 / .0523 OHMS (BETWEEN LINES)
PHASE/HERTZ 3/60	AMB°C/INSUL 40/F	E/S 611452-4-R	

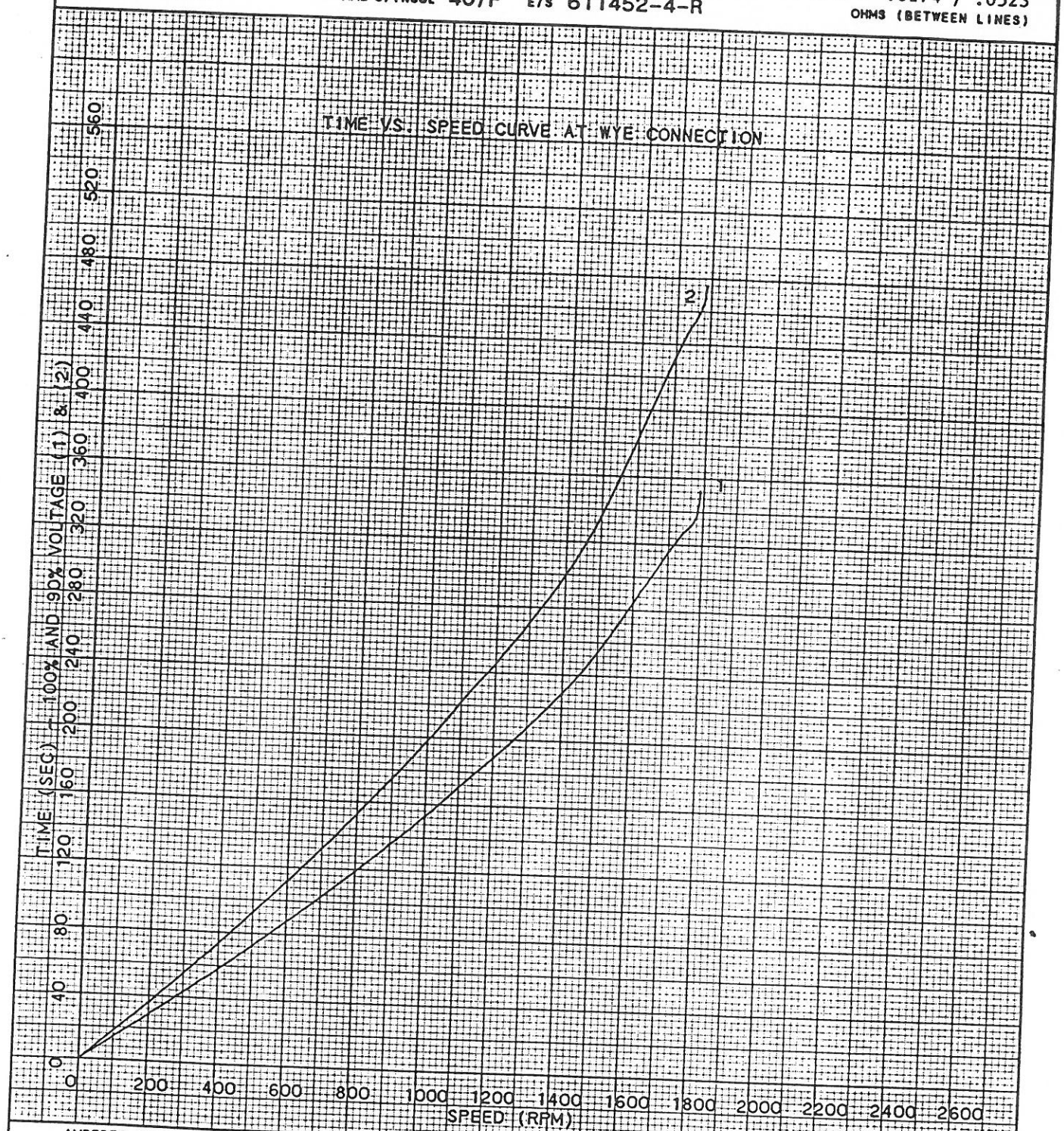

AMPERES SHOWN FOR 575 VOLT CONNECTION, IF OTHER VOLTAGE CONNECTIONS ARE AVAILABLE, THE AMPERES WILL VARY INVERSELY WITH THE RATED VOLTAGE.

RELIANCE ELECTRIC
CLEVELAND, OHIO 44117 U.S.A.

DR. BY P.L. HOWER
CK. BY J. WACHOB
APP. BY F. HEREDOS
DATE 7-15-88

A-C MOTOR PERFORMANCE CURVES

V54959.TST1

ISSUE DATE 7/15/88

File G75112

REL S.O. VA-Q3414	RPM 1789	S.F. 1.15	ROTOR 611413-10-TE
FRAME E5010Y	VOLTS 575	NEMA DESIGN –	TEST S.O. VA-Q3414-A1
HP 200	AMPS 182	CODE LETTER J	TEST DATE 7-11-88
TYPE P	DUTY CONT	ENCLOSURE TEFC-XT	STATOR RES.@ 25°C .0174 / .0523 OHMS (BETWEEN LINES)
PHASE/HERTZ 3/60	AMB°C/INSUL 40/F	E/S 611452-4-R	

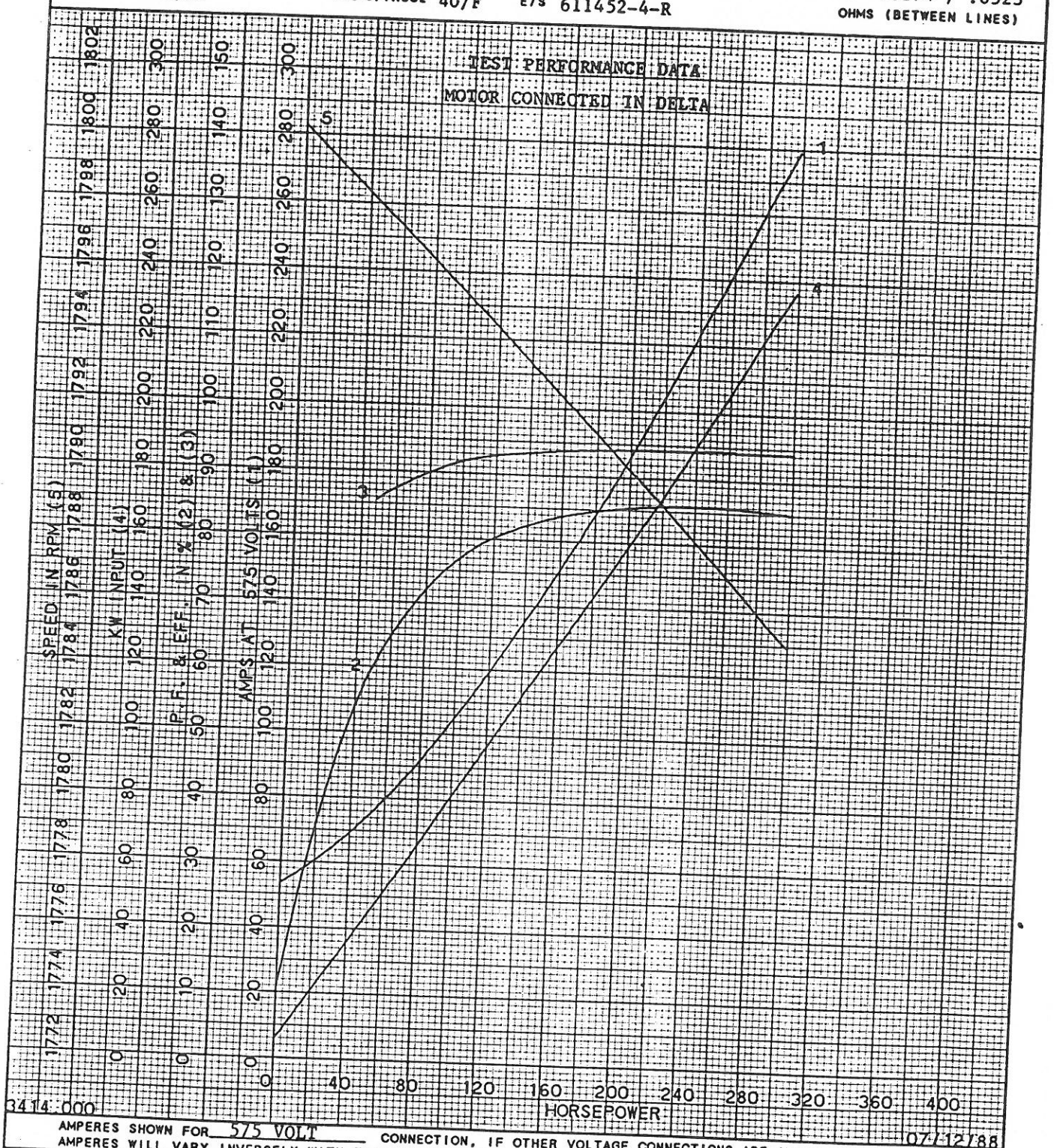

AMPERES SHOWN FOR 575 VOLT CONNECTION, IF OTHER VOLTAGE CONNECTIONS ARE AVAILABLE, THE AMPERES WILL VARY INVERSELY WITH THE RATED VOLTAGE.

RELIANCE ELECTRIC CLEVELAND, OHIO 44117 U.S.A.	DR. BY P.L.HOWER CK. BY J.WACHOB APP. BY F.HEREDOS DATE 7-15-88	A-C MOTOR PERFORMANCE CURVES V54959.TST1 ISSUE DATE 7/15/88

File N57236

ELECTRIC

DATA TRANSMITTAL AND CERTIFICATION

CUSTOMER ORDER NO.	DATE	REQ. NO.	S.O. NO.
PC51034	09/18/87		01KA583587

REFER TO THIS NUMBER IN ALL CORRESPONDENCE

SOLD TO:
PENNWALT CORP
955 MEARNS RD
WARMINSTER PA 18974

SHIP TO:
SAME AS "SOLD TO" UNLESS SHOWN
PENNWALT CORP
955 MEARNS RD
WARMINSTER PA 18974

DATA PROVIDED WITH THIS TRANSMITTAL AND CERTIFICATION IS:

- ☐ FOR CUSTOMER APPROVAL BY DATE: _____
  Return of approval prints by the above date is required to assure scheduled shipment, delay in return and/or revision of approval prints may require shipment reschedule. Return approved D/S to data source.
- ☒ FINAL, APPROVED FOR CONSTRUCTION OR INSTALLATION.
- ☐ PRELIMINARY, ENGINEERING IS COMPLETED.
- ☐ REVISED, SUPERSEDES DATA PREVIOUSLY ISSUED.
- ☐ SEE REMARKS.

DATA SOURCE
TRANSMITTAL AND CERTIFICATION ISSUED BY: R.W. Snyder DATE 1-12-88 CK BY J. Cuff DATE 1-12-88
GAINESVILLE PLANT
4349 AVERY DRIVE
GAINESVILLE, GA. 30542

DATE PRINTED: 01/11/88

MOTOR OR GEN. DATA

ITEM	USED FOR	USERS PLANT	MOTOR OR GEN. D/S:
A	RPM III		609551-2

QTY.	FRAME		SERV. FA	TYPE	R.P.M.	C BOX D/S
6	LC 2512ATZ	25 HP	1.00	TR	2500/3000	609559-1

PH/HZ/VOLTS-WINDING	DUTY	ENCLOSURE	AMB./INSL.	PWR. CODE	MOTOR OR GEN. C/D:
DC/ 500/STAB	CONT	TEFC	40 /F /	C	406770-1

BEARINGS	MOUNTING & METHOD OF DRIVE	RAILS OR BASE	MODEL NUMBER	REDUCER OR AUX D/S:
BALL	F1 DRCT			

ROTAT FROM OPP. DR. END	D-C FIELD EXCITATION	DOUBLE SHAFT EXTEN.	BRAKE OR AUX. D/S
REV	SEP 300		

REDUCER DATA

REDUCER STYLE	CLASS	FRAME	RATIO	OUTPUT RPM	ASSEMBLY

BRAKE DATA

BRAKE TYPE	SIZE	RATING FT/LB	DUTY	P.O.

BLOWER MOTOR PH/HZ/VOLTS/HP

DATA FOR CONTROL

D-C MOTOR ARMATURE CURRENT: 41.00 AMPS
FIELD CHARACTERISTICS PER CURVE:
F_1—F_2, 1.68 MAX. AMPS .93 FLD AMPS FOR 3000 RPM
F_{11}—F_{22}, _____ MAX. AMPS _____ _____ RPM
F_3—F_4, _____ MAX. AMPS _____ _____ RPM

A-C MOTOR INFORMATION FOR SELECTION OF STARTER HEATERS:
CODE: _____ LOCKED AMPS: _____
F.L. CURRENT: _____ AMPS.

SPCL. INSTALLATION FEAT. AND MISC. DATA

ADDITIONAL MOTOR OR GEN DATA:
PHASE: DC HERTZ: VOLTS: 500
LD LOC - STD
FR CONST RGD
WDG PROT QTY 1 DESCRIPTION N/C THERMOSTAT
TACH TYPE: SPY
TACH VOLTS: 50 VOLTS PER 1000 RPM

SPECIAL MARKS:
15-NLH-043

SPECIAL FEATURES:
C/BOX NO. 705029-2S
BRUSHES (HEAVY SULPHER CONDITIONS). XT FEATURES. CSA SPECS & N/P. SIMILAR TO 1KA583301 EXC. NO SENSORS & CSA REQ'D.

CERTIFIED DRAWINGS AND DATA:

INDUSTRIAL DIRECT CURRENT MOTORS AND GENERATORS - RPM III

ENCLOSURE: TOTALLY ENCLOSED
MOUNTING: FOOT
METHOD OF DRIVE: COUPLED OR BELTED

COOLING: FAN COOLED
ACCESSORIES: FLANGE MOUNTED TACHOMETER

FRAMES SC2113ATZ THRU LC2812ATZ

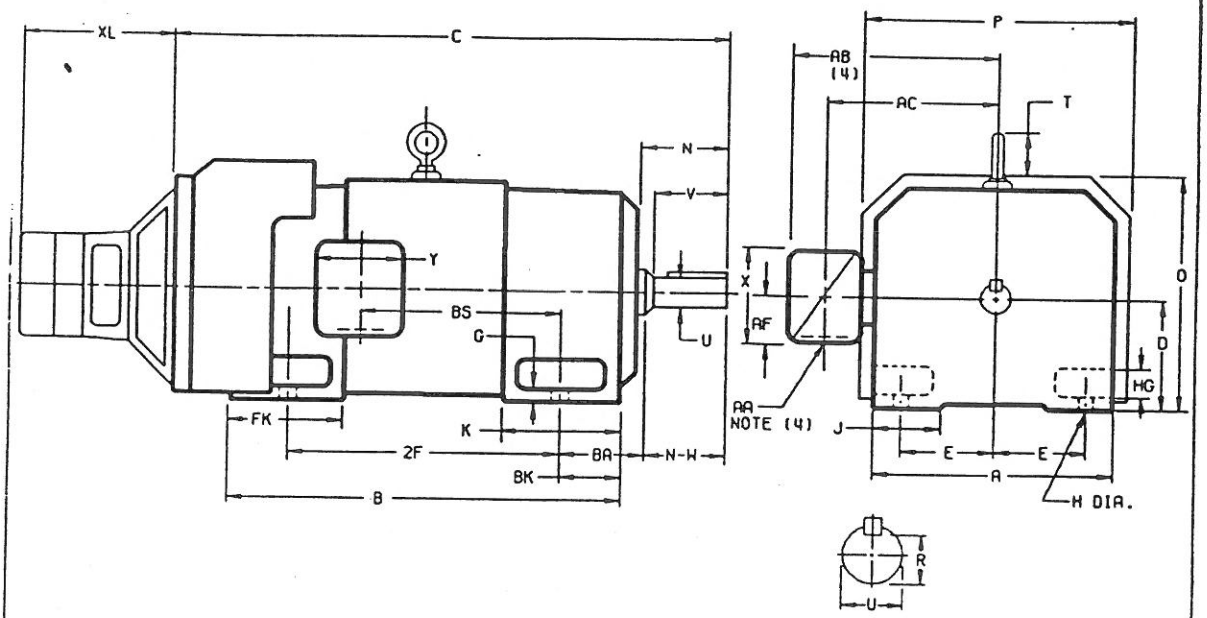

DIMENSIONS ARE IN INCHES

FRAME	A	O(1)	E	G	H	HG	J	O	P	T	BA	K	FK	BK
SC2113ATZ-LC2113ATZ	10.25	5.25	4.25	.44	.44	1.38	1.75	11.62	12.75	1.38	3.50	5.19	6.81	2.38
SC2512ATZ-LC2512ATZ	12.31	6.25	5.00	.50	.56	1.62	2.00	13.62	14.75	1.94	4.25	6.06	8.00	3.00
MC2812ATZ-LC2812ATZ	13.78	7.00	5.50	.62	.56	1.88	2.75	15.06	16.12	2.31	4.75	6.75	9.19	3.50

FRAME	C	B	BS	ZF	DRIVE END SHAFT AND KEY							WT. LBS.
					N	N-W	U(2)	V	R(3)	SQ.	LGTH.	
SC2113ATZ	32.19	22.50	11.38	18.00	4.00	3.75	1.875	3.50	1.591	.500	2.50	355
MC2113ATZ	33.44	23.75	12.62	18.00	4.00	3.75	1.875	3.50	1.591	.500	2.50	380
LC2113ATZ	35.06	25.38	14.25	18.00	4.00	3.75	1.875	3.50	1.591	.500	2.50	410
SC2512ATZ	35.94	25.06	12.06	20.00	4.50	4.25	2.125	4.00	1.845	.500	3.00	555
MC2512ATZ	37.44	26.56	13.56	20.00	4.50	4.25	2.125	4.00	1.845	.500	3.00	590
LC2512ATZ	38.94	28.06	15.06	20.00	4.50	4.25	2.125	4.00	1.845	.500	3.00	630
MC2812ATZ	41.62	29.94	14.25	22.00	5.00	4.75	2.375	4.50	2.021	.625	3.50	835
LC2812ATZ	43.88	32.19	16.50	22.00	5.00	4.75	2.375	4.50	2.021	.625	3.50	900

TACH.	XL	WT LBS.
RE-007.RE-020	6.88	25
RE-045G. WITH K45M1000 (5)	8.50	20
RE-210	17.88	45
BC-42	15.88	45
BC-46	18.31	60
BC-46/K460	21.00	65
"X/P" BC-42	17.50	45
"X/P" BC-46	18.69	60
RD-11 RD-12	12.69	20
RD-51	19.19	60
RD-61.RD-62	12.19	20
SPY (5)RPY	10.75	20
M627.M628 M727.M737.M738	12.94	35
DYNAPAR 7NC	10.25	20
RESOLVER CU9-1093-020	10.88	12
TS-2014N	6.00	15

(1) "O" DIMENSION WILL NOT BE EXCEEDED. SHIMS UP TO .03 INCHES IN THICKNESS ARE USUALLY REQUIRED FOR COUPLED OR GEARED MACHINES.
(2) "U" VARIES----+.000 -.001
(3) "R" VARIES----+.000 -.015
(4) TERMINAL BOX VARIES WITH H.P. FOR DIMENSIONS "AA", "AB", "AC", "AF", "X" AND "Y". SEE DRAWING NUMBER 609959-1.
(5) WHEN THE RE045 OR SPY TACH IS MOUNTED ON "C2113" OR "C2512" FRAME SIZE, SUBTRACT 1.00 FROM "XL" DIMENSION.

TERMINAL BOX CAN BE ROTATED FOR LEAD OUTLET AT TOP, SIDES OR BOTTOM.
TERMINAL BOX LOCATED ON OPPOSITE SIDE WHEN F-2, W-1, W-4, W-5, W-7, OR C-1 MOUNTING IS SPECIFIED. BOX LOCATED ON TOP WHEN SPECIFIED.
MOTOR WEIGHT MAY VARY 15% FOR NON-STANDARD RATINGS AND/OR ACCESSORIES.
IF MOUNTING CLEARANCE DETAILS ARE REQUIRED, CONSULT FACTORY.

FRAME- _____ TYPE- _____ TACH _____ CERTIFIED FOR- _____
ORDER- _____ ITEM _____ HP- _____ RPM- _____ WDG- _____ ARM. VOLTS _____ FIELD VOLTS _____
RELIANCE SALES ORDER- _____ APPROVED BY- _____ DATE- _____

RELIANCE ELECTRIC
CLEVELAND, OHIO 44117 U.S.A.

DR. BY A.FOOTMAN
CK. BY T.CUFR
APP. BY T.EVON
DATE 10-18-85

DIMENSION SHEET 609951-2
ISSUE DATE OCTOBER 18, 1985

INDUSTRIAL DIRECT CURRENT MOTORS AND GENERATORS - RPM III

STEEL AND CAST IRON TERMINAL BOX DIMENSIONS

STANDARD SIZE AND ONE SIZE LARGER

FRAMES C2113ATZ THRU C2812ATZ

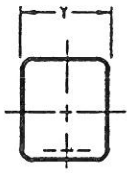

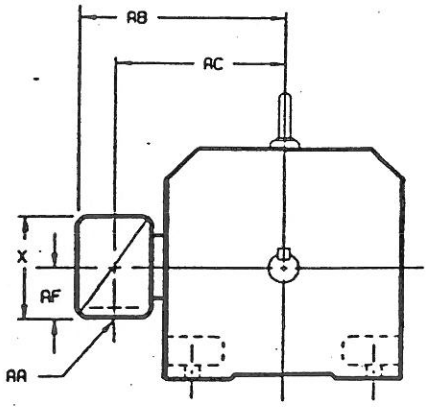

DIMENSIONS ARE IN INCHES

STEEL TERMINAL BOX DIMENSIONS

FRAME SIZE	MAX AMPS	STANDARD SIZE AA(1)	AB	AC	AF	X	Y	PART NUMBER	ONE SIZE LARGER AA(1)	AB	AC	AF	X	Y	PART NUMBER
C2113ATZ (2)	40	3/4 & 1"	9.44	7.75	1.94	4.38	5.00	705028-1-R	1-1/4 & 1-1/2	10.44	8.31	2.50	5.50	6.12	705029-1-R
	96	1-1/4 & 1-1/2	10.44	8.31	2.50	5.50	6.12	705029-1-R	2" & 2-1/2	11.56	8.69	3.19	7.00	7.62	705030-1-R
	208	2" & 2-1/2	11.56	8.69	3.19	7.00	7.62	705030-1-R	2" & 2-1/2	11.56	8.69	3.19	7.00	7.62	705030-1-R
C2512ATZ (2)	40	3/4 & 1"	10.44	8.75	1.94	4.38	5.00	705028-1-R	1-1/4 & 1-1/2	11.44	9.31	2.50	5.50	6.12	705029-1-R
	96	1-1/4 & 1-1/2	11.44	9.31	2.50	5.50	6.12	705029-1-R	2" & 2-1/2	12.56	9.69	3.19	7.00	7.62	705030-1-R
	208	2" & 2-1/2	12.56	9.69	3.19	7.00	7.62	705030-1-R	2" & 2-1/2	12.56	9.69	3.19	7.00	7.62	705030-1-R
C2812ATZ	128	2"	14.00	10.38	4.25	8.44	7.25	74874-R	3"	14.44	11.06	4.25	8.44	7.25	74874-24-R
	185	3"	14.44	11.06	4.25	8.44	7.25	74874-24-R	4"	15.88	11.69	5.38	10.56	9.00	700308-3-R
	269	4"	15.88	11.69	5.38	10.56	9.00	700308-3-R	5" (4)	18.19	12.81	7.00	12.75	15.00	76870-9-R

CAST IRON TERMINAL BOX DIMENSIONS

FRAME SIZE	MAX AMPS	STANDARD SIZE AA(3)	AB	AC	AF	X	Y	PART NUMBER	ONE SIZE LARGER AA(3)	AB	AC	AF	X	Y	PART NUMBER
C2113ATZ	18	3/4	10.44	8.31	2.50	5.00	5.75	705028-2-S	1"	10.44	8.31	2.50	5.00	5.75	705028-2-T
	40	1"	10.44	8.31	2.50	5.00	5.75	705028-2-T	1-1/2	11.38	8.81	3.00	6.00	7.00	705029-2-R
	96	1-1/2	11.38	8.81	3.00	6.00	7.00	705029-2-R	2"	11.38	8.81	3.00	6.00	7.00	705029-2-S
	208	2"	11.38	8.81	3.00	6.00	7.00	705029-2-S	2-1/2	13.06	9.19	3.62	7.88	9.25	705030-2-R
C2512ATZ	18	3/4	11.44	9.31	2.50	5.00	5.75	705028-2-S	1"	11.44	9.31	2.50	5.00	5.75	705028-2-T
	40	1"	11.44	9.31	2.50	5.00	5.75	705028-2-T	1-1/2	12.38	9.81	3.00	6.00	7.00	705029-2-R
	96	1-1/2	12.38	9.81	3.00	6.00	7.00	705029-2-R	2"	12.38	9.81	3.00	6.00	7.00	705029-2-S
	208	2"	12.38	9.81	3.00	6.00	7.00	705029-2-S	2-1/2	14.06	10.19	3.62	7.88	9.25	705030-2-R
C2812ATZ	128	2"	12.75	10.19	3.00	6.00	7.00	75460-T	3"	14.44	10.56	3.62	7.88	9.25	76700-RB
	185	3"	14.44	10.56	3.62	7.88	9.25	76700-RB	4"	15.75	11.44	4.12	9.50	10.50	76708-RR
	269	4"	15.75	11.44	4.12	9.50	10.50	76708-RR	5" (4)	18.19	12.81	7.00	12.75	15.00	76870-S

(1) "AA" CONDUIT.
(2) STEEL TERMINAL BOX FOR C2113ATZ AND C2512ATZ FRAMES PROVIDED WITH DOUBLE KNOCKOUT.
(3) "AA" PIPE TAP.
(4) TERMINAL BOX 76870-S AND 76870-9R EXTENDS BELOW MOTOR FEET.

TERMINAL BOX CAN BE ROTATED FOR LEAD OUTLET AT TOP, SIDES OR BOTTOM.
TERMINAL BOX LOCATED ON OPPOSITE SIDE WHEN F-2, W-1, W-4, W-5, W-7, OR C-1 MOUNTING IS SPECIFIED. BOX LOCATED ON TOP WHEN SPECIFIED.
FOR " X/P" TERMINAL BOX DIMENSIONS SEE 609959-2.
FOR MILL TYPE TERMINAL BOX DIMENSIONS SEE 609959-3.

FRAME-_____ TYPE-_____ TERMINAL BOX-_____ CERTIFIED FOR-_____
ORDER-_____ ITEM _____ HP-_____ RPM-_____ WDG-_____ ARM. VOLTS_____ FIELD VOLTS_____
RELIANCE SALES ORDER-_____ APPROVED BY-_____ DATE-_____

RELIANCE ELECTRIC
CLEVELAND, OHIO 44117 U.S.A.

DR. BY M.KOCJAN
CK. BY M.MINALICK
APP. BY T.EYON
DATE 7-22-83

DIMENSION SHEET 609959-1
ISSUE DATE MAY 29, 1987

C/R 231668

THIRD ANGLE PROJECTION (E)