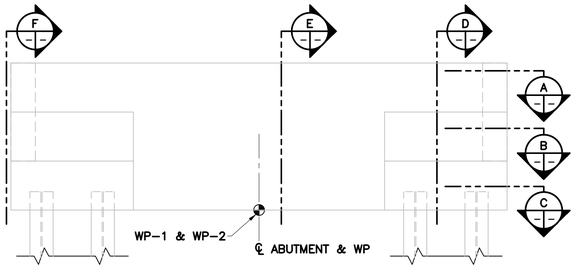

REFERENCE KEY
1:50

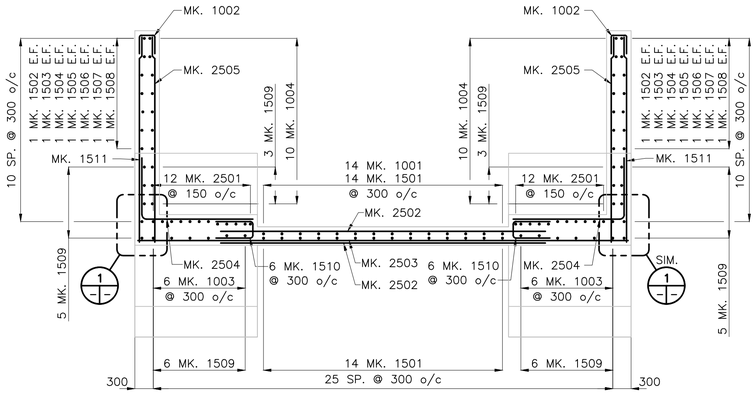

A SECTION
1:50

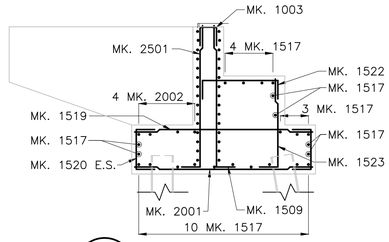

D SECTION
1:50

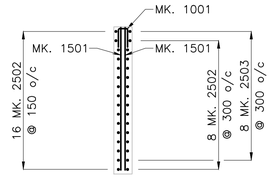

E SECTION
1:50

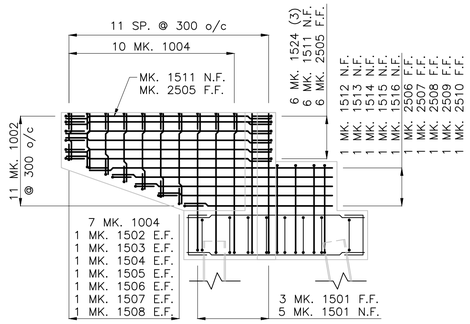

F SECTION
1:50

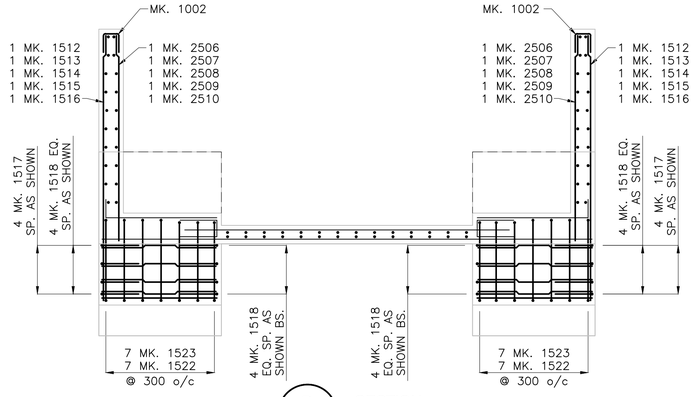

B SECTION
1:50

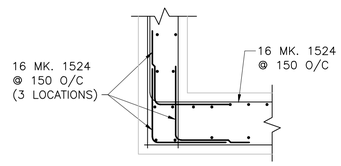

1 DETAIL
1:25

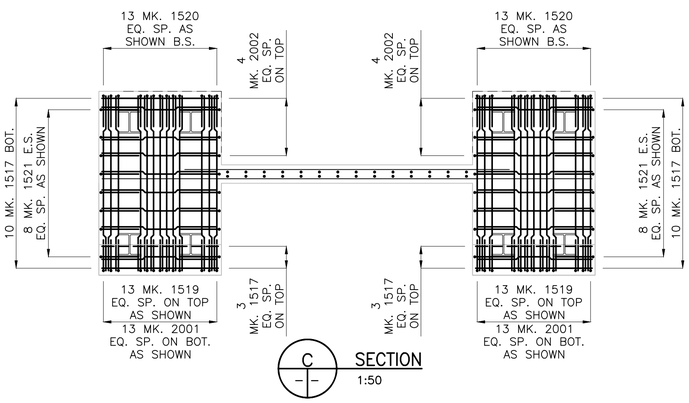

C SECTION
1:50

BILL OF REINFORCING STEEL

FOR ABUTMENT SU.1 & SU.2

STRAIGHT BARS				BENT BARS							
MARK	QTY.	LENGTH (mm)	MASS (kg)	MARK	QTY.	TYPE	A	B	C	LENGTH (mm)	MASS (kg)
1501	28	2245	98.7	1001	12	B	100	300	300	700	6.6
1502	4	695	4.4	1002	22	B	250	300	300	850	14.4
1503	4	815	5.1	1003	12	B	300	300	300	900	8.5
1504	4	935	5.9	1004	34	B	210	300	300	810	21.6
1505	4	1055	6.6								
1506	4	1175	7.4	1509	28	A	300	2085		2385	104.8
1507	4	1295	8.1	1510	10	B	350	600	600	1550	24.3
1508	4	1415	8.9	1518	16	B	1430	600	600	2630	66.1
1511	12	3350	63.1	1520	52	B	650	600	600	1850	151.0
1512	2	2410	7.6	1521	32	B	615	600	600	1815	91.2
1513	2	2835	8.9	1522	14	B	1325	600	600	2525	55.5
1514	2	3210	10.1	1523	14	A	300	1450		1750	38.5
1515	2	3585	11.3	1524	36	A	600	600		1200	67.8
1516	2	3960	12.4								
1517	46	1850	133.6	2501	24	A	300	2085		2385	224.7
1519	26	2850	116.3	2504	32	A	1000	1850		2850	358.0
2001	26	2850	174.5								
2002	8	1850	34.9	TOTAL MASS OF REINFORCING STEEL FOR 1 ABUTMENT							2944.2 kg
				BAR TYPES							
2502	24	5300	499.3								
2503	8	7950	249.6								
2505	12	3350	157.8								
2506	2	1410	11.1								
2507	2	1835	14.4								
2508	2	2210	17.3								
2509	2	2585	20.3								
2510	2	2962	23.3								

METRIC
WHOLE NUMBERS INDICATE MILLIMETRES
DECIMALIZED NUMBERS INDICATE METRES

NO.	REVISIONS	DATE	BY
0	ISSUED FOR TENDER	26.02.13	J.M.B.

B.M.
ELEV.

Stantec
500-311 Portage Ave, Winnipeg MB Canada
www.stantec.com

DESIGNED BY	S.S.Y.	CHECKED BY	Y.M.S.
DRAWN BY	J.M.B.	APPROVED BY	E.R.T.
HOR. SCALE: VERTICAL:	AS NOTED	RELEASED FOR CONSTRUCTION:	
DATE	2026-02-11	DATE	

ENGINEER'S SEAL

CONSULTANT DRAWING NO.
S-106

THE CITY OF WINNIPEG
WATER AND WASTE DEPARTMENT
ENGINEERING DIVISION

GREATER WINNIPEG WATER DISTRICT
RAILWAY BRIDGE REPLACEMENT AT MILE 41.3
ABUTMENT REINFORCING
PLAN, SECTION & DETAILS

SHEET 9 OF 17
CAD FILE DRAWING NUMBER 33942s-106-m41.3.dwg
CITY DRAWING NUMBER 1-0754R-S0007-001

U:\113739420\300_drawing\0302_sheet_files\03_structural\33942s-106-m41.3.dwg
2026/02/11 3:58 PM By: Beemaerts, James