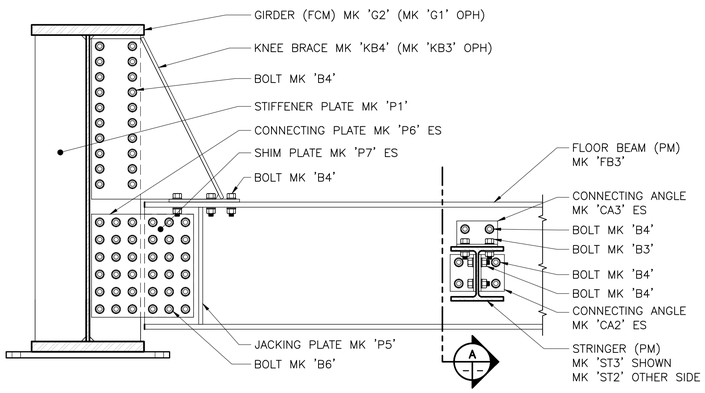

1 / 10|11 DETAIL 1:10

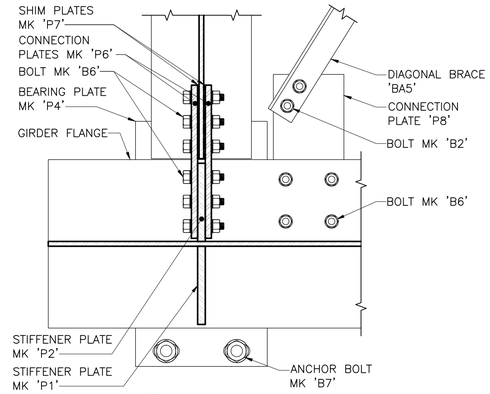

4 / 10|11 DETAIL 1:10

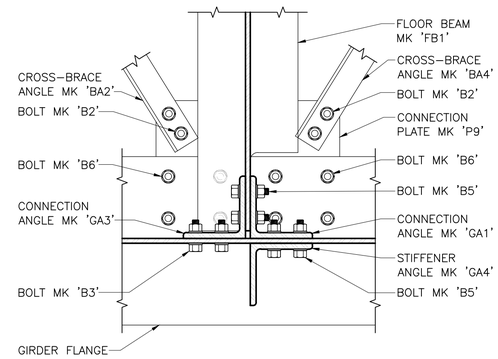

5 / 10|11 DETAIL 1:10

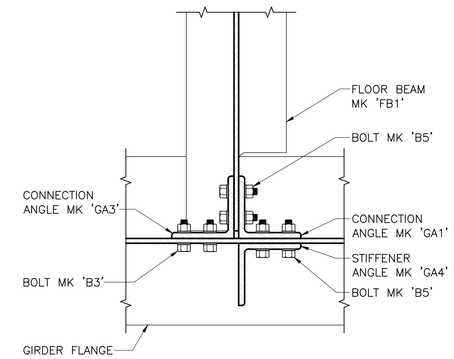

6 / 10|11 DETAIL 1:10

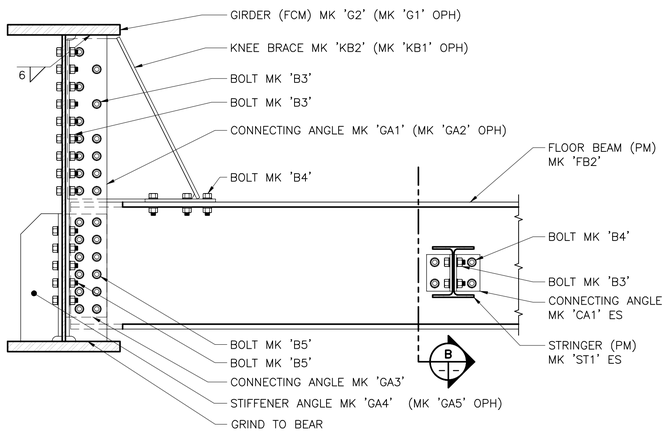

2 / 10|11 DETAIL 1:10

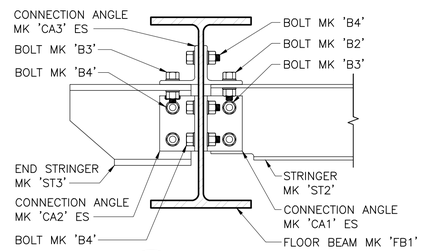

A / – – SECTION 1:10

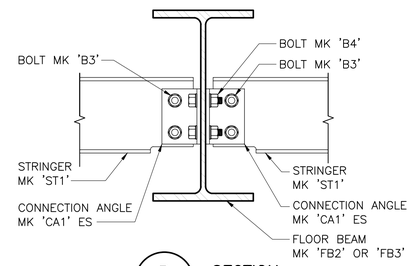

B / – – SECTION 1:10

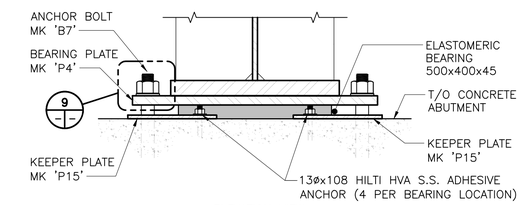

ELEVATION VIEW

ABUTMENT EXPANSION BEARING DETAIL @ SU.1
1:10

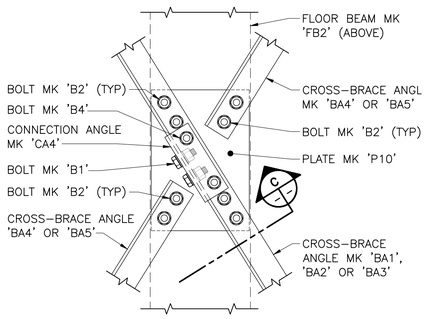

7 / 10|11 DETAIL 1:10

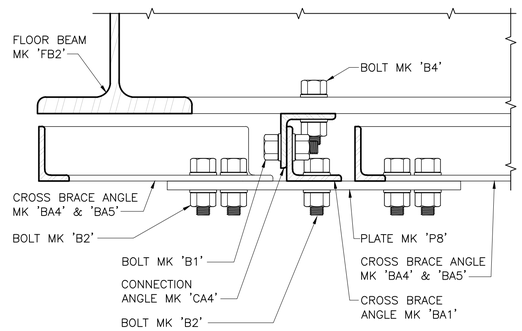

C / – – SECTION 1:5

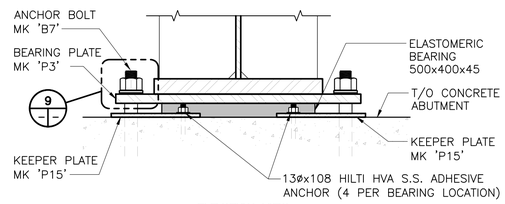

ELEVATION VIEW

ABUTMENT FIXED BEARING DETAIL @ SU.2
1:10

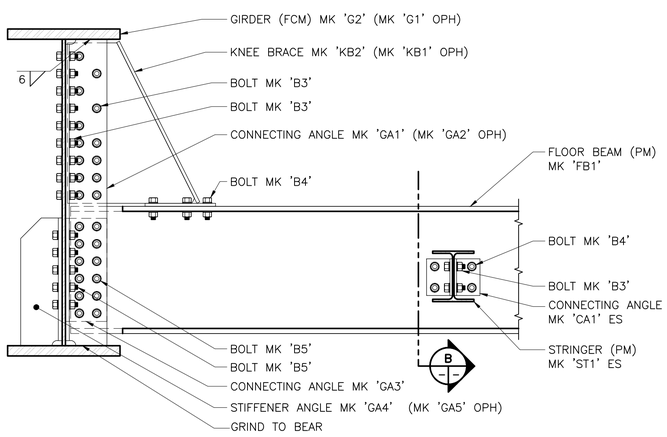

3 / 10|11 DETAIL 1:10

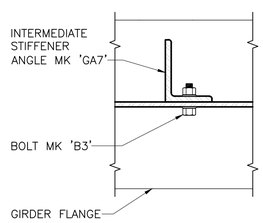

8 / 10|11 DETAIL 1:10

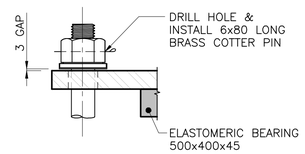

9 / – – DETAIL 1:5

METRIC
WHOLE NUMBERS INDICATE MILLIMETRES
DECIMALIZED NUMBERS INDICATE METRES

B.M. ELEV.			
0	ISSUED FOR TENDER	26.02.13	J.M.B.
NO.	REVISIONS	DATE	BY

Stantec
500-311 Portage Ave, Winnipeg MB Canada
www.stantec.com

DESIGNED BY	S.S.Y.	CHECKED BY	Y.M.S.
DRAWN BY	J.M.B.	APPROVED BY	E.R.T.
HOR. SCALE: VERTICAL:	AS NOTED	RELEASED FOR CONSTRUCTION:	
DATE	2026-02-11	DATE	

ENGINEER'S SEAL

CONSULTANT DRAWING NO. S-108

Winnipeg
THE CITY OF WINNIPEG
WATER AND WASTE DEPARTMENT
ENGINEERING DIVISION

GREATER WINNIPEG WATER DISTRICT
RAILWAY BRIDGE REPLACEMENT AT MILE 41.3
STRUCTURAL STEEL CONNECTIONS
SECTIONS & DETAILS

SHEET 11 OF 17
CAD FILE DRAWING NUMBER 33942s-108-m41.3.dwg
CITY DRAWING NUMBER 1-0754R-S0009-001

U:\113733942\0300_drawing\0302_sheet_files\03_structural\33942s-108-m41.3.dwg
2026/02/11 4:00 PM By: Beermaerts, James