ISSUED FOR TENDER

NOT TO BE USED FOR CONSTRUCTION

METRIC

WHOLE NUMBERS INDICATE MILLIMETERS
DECIMALIZED NUMBERS INDICATE METERS

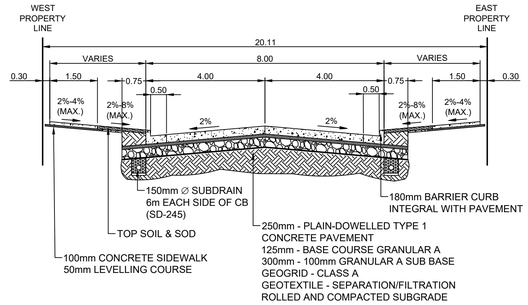

SECTION A

2 LANE 8.0m CONCRETE PAVEMENT STRUCTURE WITH BUMP OUT
SCALE: N.T.S.

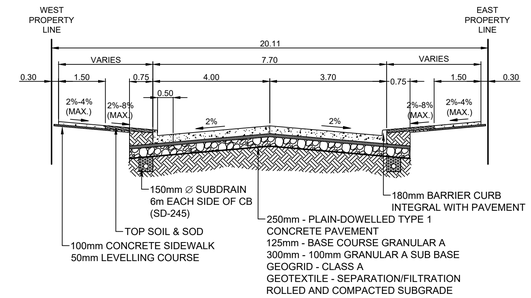

SECTION B

2 LANE 7.7m CONCRETE PAVEMENT STRUCTURE WITH BUMP OUT
SCALE: N.T.S.

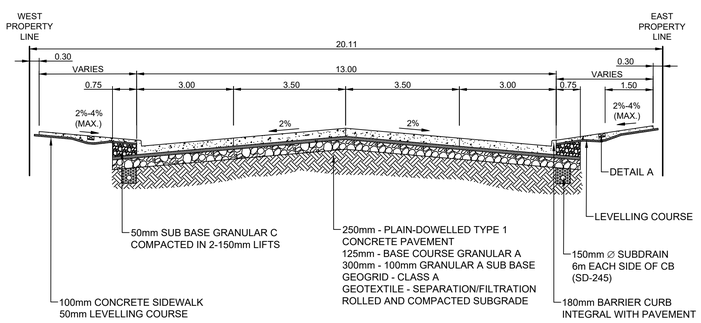

SECTION C

4 LANES 13.0m CONCRETE PAVEMENT STRUCTURE
SCALE: N.T.S.

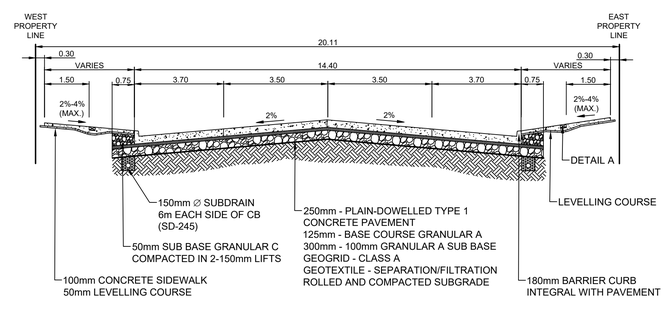

SECTION D

4 LANE 14.4m CONCRETE PAVEMENT STRUCTURE
SCALE: N.T.S.

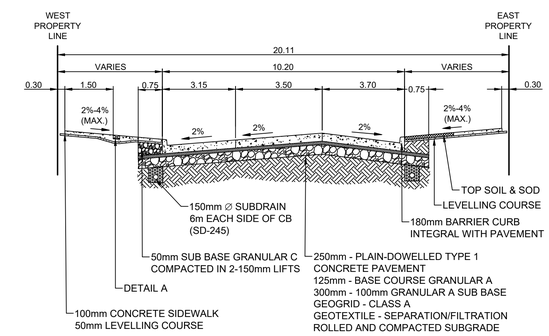

SECTION E

3 LANE 10.2m CONCRETE PAVEMENT STRUCTURE
SCALE: N.T.S.

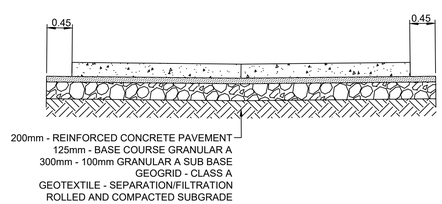

SECTION F

TYPICAL PUBLIC LANE CROSS SECTION
SCALE: N.T.S.

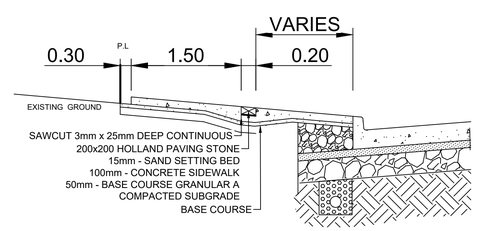

DETAIL A

TYPICAL CONCRETE SIDEWALK SECTION
WITH BLOCKOUTS AND PAVING STONE BAND
SCALE: N.T.S.

EXISTING	LEGEND - PLAN	PROPOSED	EXISTING	LEGEND - PLAN	PROPOSED	EXISTING	LEGEND - PROFILE	PROPOSED
	GUY WIRE ANCHOR			TREE/ TREE TRUNK			PAVING STONES	
	HYDRANT			LDS/WWS			CONCRETE	
	VALVE			WATERMAIN			CONCRETE SIDEWALK	
	CURB STOP			GAS			ASPHALT	
	MANHOLE			TRAFFIC SIGNALS			SIDEWALK BLOCKS	
	CATCH BASIN			HYDRO/STREET LIGHT			WOOD FENCE	
	CATCH PIT/CURB INLET			MTS/SHAW			CHAIN LINK FENCE	
	HYDRO POLE			BOC/EDGE OF PAVEMENT			WEST GUTTER	
	LIGHT STANDARD			PROPERTY LINE			CENTER LINE	
	TRAFFIC SIGNAL POLE			RAMP CURB			EAST GUTTER	
	SURVEY BAR			WATER SERVICE INSULATION			WEST LANE	
231.000 & (231.000)	ELEVATIONS	(231.000)		SUB DRAINS			EAST LANE	

LOCATION APPROVED
UNDERGROUND STRUCTURES

SUPR. U/G STRUCTURES COMMITTEE — DATE

NOTE:
LOCATION OF UNDERGROUND STRUCTURES AS SHOWN ARE BASED ON THE BEST INFORMATION AVAILABLE. BUT NO GUARANTEE IS GIVEN THAT ALL EXISTING UTILITIES ARE SHOWN OR THAT THE GIVEN LOCATIONS ARE EXACT. CONFIRMATION OF EXISTENCE AND EXACT LOCATION OF ALL SERVICES MUST BE OBTAINED FROM THE INDIVIDUAL UTILITIES BEFORE PROCEEDING WITH CONSTRUCTION.

B.M.
ELEV.

NO.	REVISIONS	DATE	BY
3.	ISSUED FOR TENDER	2/17/26	T.L.
2.	SUBMIT FOR PLAN APPROVAL - REVISED	1/27/26	T.L.
1.	SUBMIT FOR PLAN APPROVAL	12/17/25	T.L.

ENGINEERING DIVISION
TECHNOLOGY SERVICES BRANCH
106 - 1155 PACIFIC AVE

DESIGNED BY	T.L.	CHECKED BY	A.P., E.H., R.W.
DRAWN BY	T.L.	APPROVED BY	J.T.S.
HOR. SCALE:			
VERTICAL:	1 : 10		
DATE	2026/02/13		

ENGINEER'S SEAL
PROVINCE OF MANITOBA
J.T. SHUMKA
Member 32541
REGISTERED PROFESSIONAL ENGINEER
2026-02-17

Winnipeg

THE CITY OF WINNIPEG
PUBLIC WORKS DEPARTMENT

McGREGOR STREET
FROM DUFFERIN AVENUE TO SELKIRK AVENUE
CONCRETE RECONSTRUCTION AND ASSOCIATED WORKS
SECTIONS AND DETAILS

CITY DRAWING NUMBER SE-26-108
SHEET 9 OF 10
TENDER NO. 2-2026