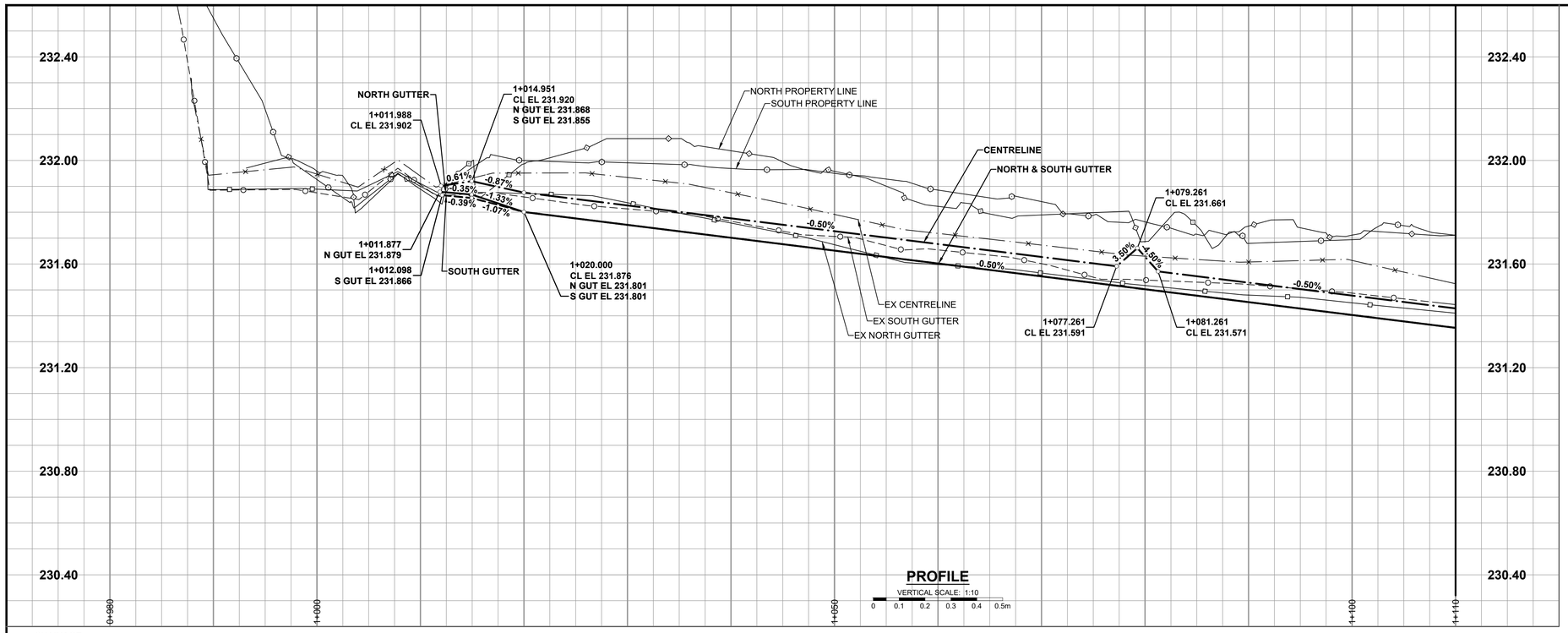

NOTES

1. ADJUST MH AND CB RIMS TO NEW GRADES.
2. LAMP STANDARDS, HYDRO POLES, AND ANCHORS THAT REQUIRE TEMPORARY SUPPORT, REMOVAL OR REPLACEMENT, TO BE DONE SO AT THE EXPENSE OF THE CONTRACTOR AS NECESSARY.
3. CONTRACTOR TO REGRADE/RENEW EXISTING PRIVATE SIDEWALKS TO LIMITS AS SHOWN. SIDEWALKS TO BE RENEWED WITH CONCRETE UNLESS NOTED OTHERWISE.
4. CONTRACTOR TO TAKE PRECAUTIONARY STEPS TO PROTECT EXISTING TREES WITHIN THE LIMITS OF CONSTRUCTION FROM DAMAGE FROM CONSTRUCTION ACTIVITIES AS OUTLINED IN THE SPECIFICATIONS.
5. CONTRACTOR TO CONFIRM THE LOCATION OF ALL UTILITIES/SERVICES IN THE FIELD PRIOR TO CONSTRUCTION.
6. MODIFIED BARRIER CURB TO BE USED AT ALL INTERSECTION RADII, BACK LANE RADII AND BULLNOSES.
7. CONTRACTOR TO OVERLAY DRIVEWAYS TO ENSURE POSITIVE DRAINAGE TO NEW STREET GRADES. FINAL LIMITS TO BE DETERMINED IN THE FIELD BY CONTRACT ADMINISTRATOR.
8. CB SD-023 & SD-024 OFFSETS ARE DIMENSIONED TO BOC. CB SD-025 OFFSETS ARE DIMENSIONED O/C.
9. REFER TO TENDER FOR DETAILS REGARDING TRAFFIC MANAGEMENT.
10. ADJUST EXISTING WATER VALVES AND WATER SERVICE CURB STOPS TO GRADE.
11. CONTRACTOR WILL BE RESPONSIBLE FOR CONFIRMING LOCATION OF WATER SERVICES FOR THE PURPOSE ON INSULATION.
12. ADD 200.000 m TO ABBREVIATED ELEVATIONS TO OBTAIN GEODETIC ELEVATIONS.

AC WATERMAIN NOTES

1. USE OF VIBRATORY HEAVY EQUIPMENT WITHIN 3.0 METERS HORIZONTALLY OF THE ASBESTOS-CONCRETE WATER MAIN CENTERLINE IS PROHIBITED FOR SUBGRADE AND SUB-BASE MATERIALS. THIS RESTRICTION DOES NOT APPLY TO THE USE OF VIBRATORY ROLLERS ON THE PAVEMENT SURFACE LAYERS AND BASE COURSE LAYER.
2. CONCRETE DEMOLITION AND REMOVAL WITHIN 3.0 METERS HORIZONTALLY OF THE ASBESTOS-CONCRETE WATER MAIN SHALL BE COMPLETED BY SAW CUTTING OR USE OF HAND-HELD JACKHAMMERS. USE OF MACHINE MOUNTED CONCRETE BREAKERS ABOVE ASBESTOS-CONCRETE WATER MAINS IS PROHIBITED.

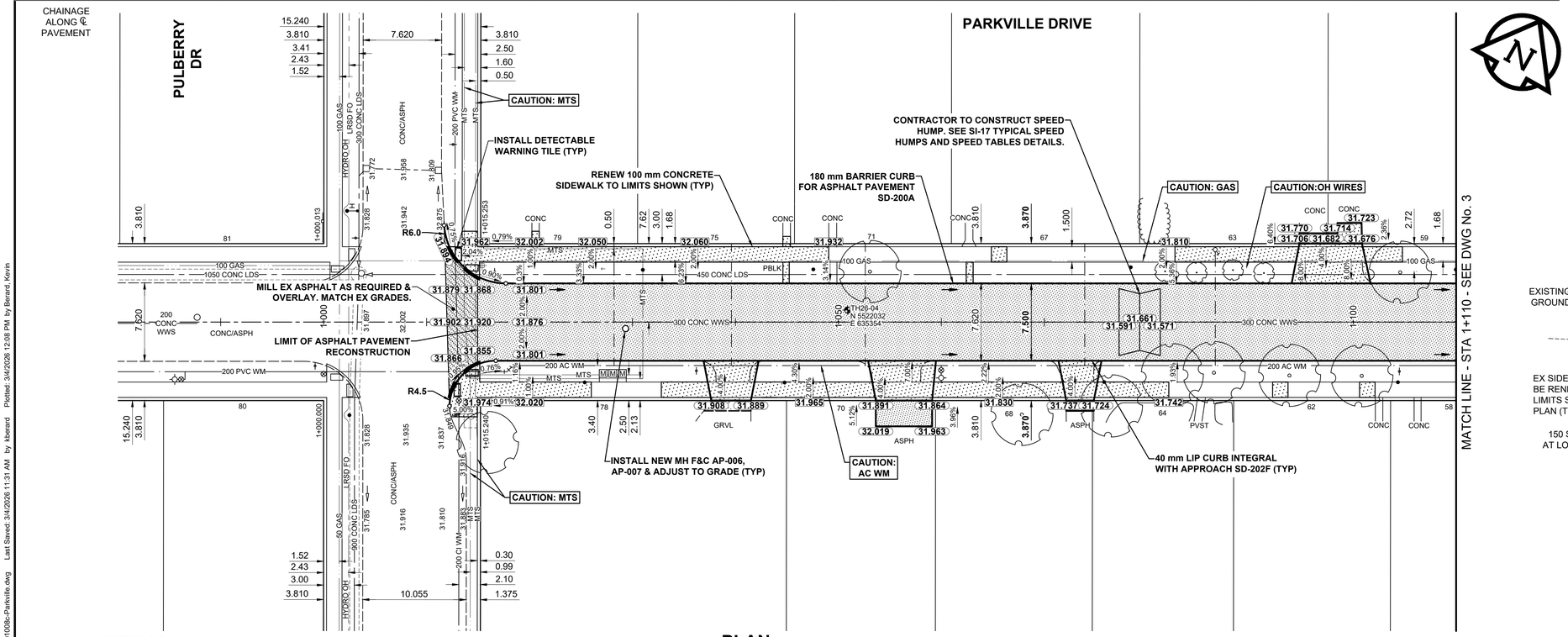

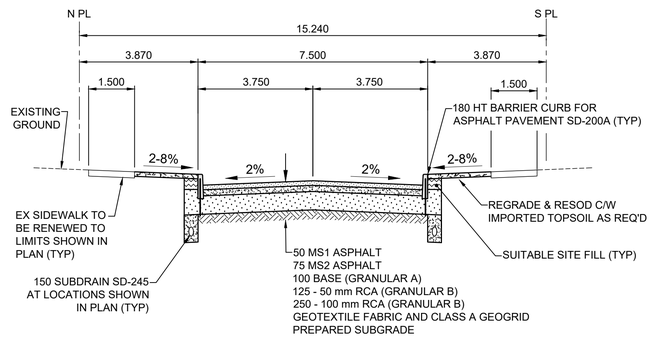

TYPICAL PAVEMENT SECTION

ASPHALT PAVEMENT STRUCTURE

SCALE: NTS

ENGINEERS GEOSCIENTISTS MANITOBA
Certificate of Authorization
Stantec Consulting Ltd.
No. 1301

TENDER No. 31-2026

METRIC

WHOLE NUMBERS INDICATE MILLIMETRES
DECIMALIZED NUMBERS INDICATE METRES

EXISTING	LEGEND - PLAN	PROPOSED	EXISTING	LEGEND - PLAN	PROPOSED	EXISTING	LEGEND - PLAN	PROPOSED
	HYDRANT			LDS / WWS			CONCRETE	
	VALVE			WATER MAIN			CONC SIDEWALK / MEDIAN	
	CURB STOP			GAS			ASPHALT	
	MANHOLE			TRAFFIC SIGNALS			PAVING STONE	
	CATCH BASIN / CATCH PIT			HYDRO / STREET LIGHT			GRAVEL	
	CURB INLET			COMMUNICATIONS			PLANING / REMOVAL	
	POLE			CURB RENEWAL			DITCH FLOW	
	LIGHT STANDARD			PROPERTY LINE			TOP OF SLOPE	
	TRAFFIC SIGNAL POLE			RAMP CURB			CULVERT	
	SURVEY BAR		33.000	ELEVATIONS	33.333		SEWER FLOW DIRECTION	
	GEODETIC BENCH MARK			TREE / TREELINE		TH-12	TEST HOLE / CORE HOLE	

LOCATION APPROVED
UNDERGROUND STRUCTURES

SUPR. U/G STRUCTURES COMMITTEE — DATE

NOTE:
LOCATION OF UNDERGROUND STRUCTURES AS SHOWN ARE BASED ON THE BEST INFORMATION AVAILABLE BUT NO GUARANTEE IS GIVEN THAT ALL EXISTING UTILITIES ARE SHOWN OR THAT THE GIVEN LOCATIONS ARE EXACT. CONFIRMATION OF EXISTENCE AND EXACT LOCATION OF ALL SERVICES MUST BE OBTAINED FROM THE INDIVIDUAL UTILITIES BEFORE PROCEEDING WITH CONSTRUCTION.

BM
ELEV

No.	REVISIONS	YY/MM/DD	BY
0	ISSUED FOR TENDER	26/03/04	JGK

Stantec
500 - 311 Portage Avenue, Winnipeg MB Canada R3B 2B9
Tel. 204.489.5900 Fax. 204.453.9012 www.stantec.com

DESIGNED BY	ASM	CHECKED BY	JGK
DRAWN BY	DML	APPROVED BY	RPB
HOR SCALE	1:250	RELEASED FOR CONSTRUCTION	
VERT SCALE	1:10		
DATE	March 4, 2026	DATE	

PROFESSIONAL'S SEAL
PROVINCE OF MANITOBA
J.G. KENNEDY
Member
22326
2026-03-04
REGISTERED PROFESSIONAL ENGINEER

CONSULTANT FILE NAME
01008c-Parkville.dwg

Winnipeg
THE CITY OF WINNIPEG
PUBLIC WORKS DEPARTMENT
ENGINEERING DIVISION

2026 LOCAL STREET RENEWAL PROGRAM
PARKVILLE DRIVE
PULBERRY DR TO DUNKIRK DR
ASPHALT PAVEMENT RECONSTRUCTION
PAVING AND GRADING
PULBERRY DR TO STA 1+110

CITY DRAWING NUMBER: N/A
SHEET 2 OF 30
DRAWING NUMBER: 2

ISO A1 - 594mm x 841mm
U:\132501008\0300_drawing\0302_sheet_files\02_civil\26-R-09A\01008c-Parkville.dwg Last Saved: 3/4/2026 11:31 AM by kberard Plotted: 3/4/2026 12:08 PM by Berard, Kevin