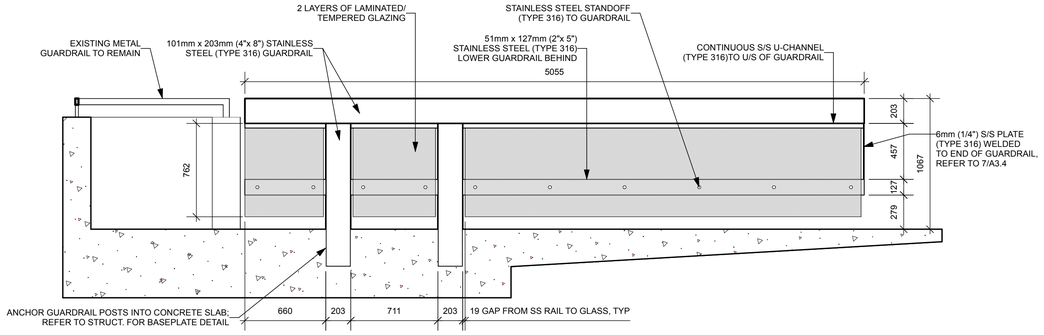

1 A3.4 NEW GUARD RAIL - 10M DIVING PLATFORM B (NORTH, PERIMETER SIDE) AND 7.5M DIVING PLATFORM B (SOUTH, PERIMETER SIDE, MIRRORED)
SCALE: 1:25

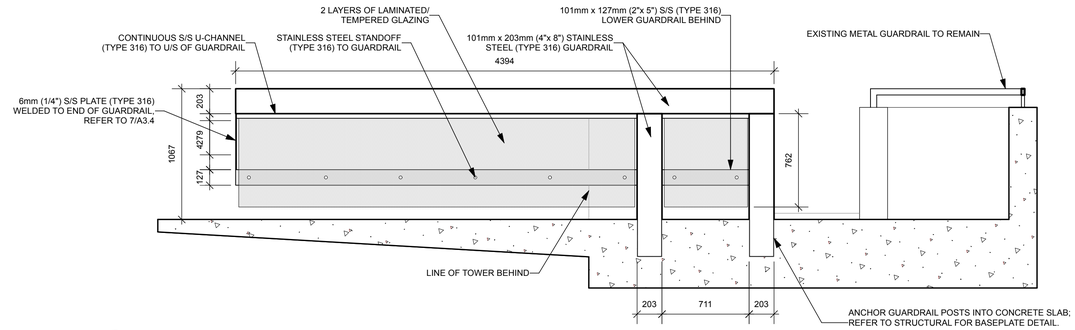

2 A3.4 NEW GUARD RAIL - 10M DIVING PLATFORM B (SOUTH, TOWER SIDE) AND 7.5M DIVING PLATFORM B (NORTH, TOWER SIDE, MIRRORED)
SCALE: 1:25

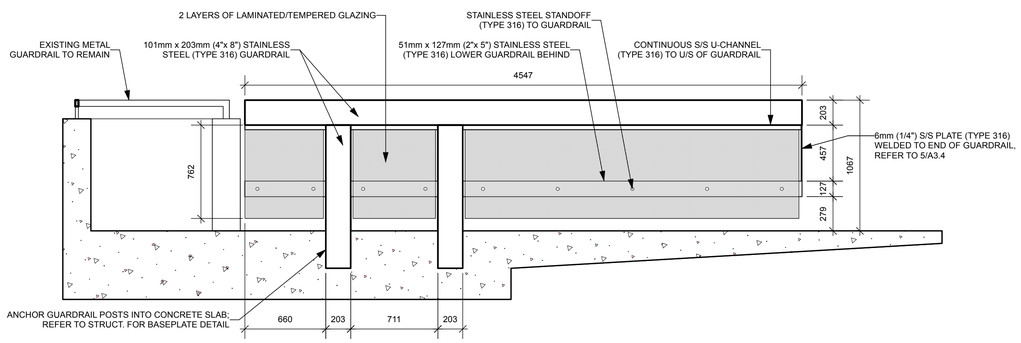

3 A3.4 NEW GUARD RAIL - 5M DIVING PLATFORM B (NORTH, PERIMETER SIDE) AND 3M DIVING PLATFORM B (SOUTH, PERIMETER SIDE, MIRRORED)
SCALE: 1:25

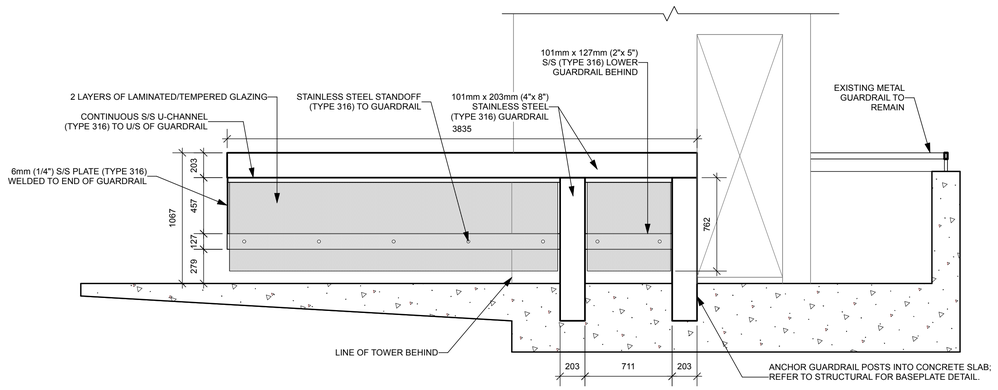

4 A3.4 NEW GUARD RAIL - 5M DIVING PLATFORM B (SOUTH, TOWER SIDE) AND 3M DIVING PLATFORM B (NORTH, TOWER SIDE, MIRRORED)
SCALE: 1:25

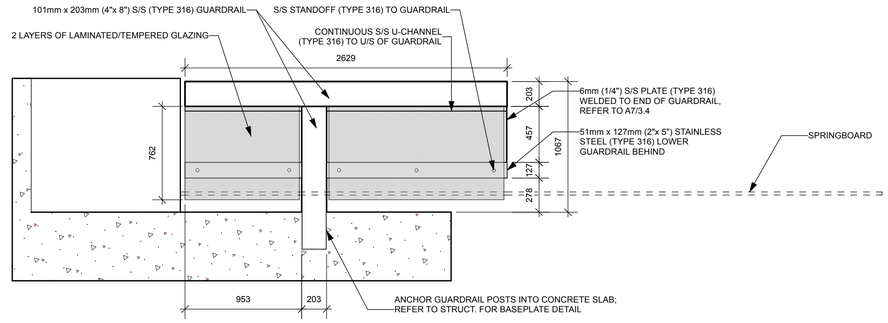

5 A3.4 NEW GUARD RAIL - DIVING PLATFORM A - NORTH SPRINGBOARD (PERIMETER SIDE) AND SOUTH SPRINGBOARD (PERIMETER SIDE, MIRRORED)
SCALE: 1:25

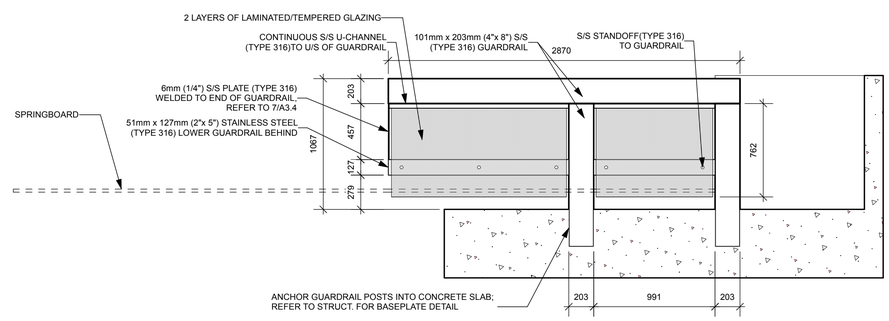

6 A3.4 NEW GUARD RAIL - DIVING PLATFORM A - NORTH SPRINGBOARD (STAIR SIDE) AND SOUTH SPRINGBOARD (STAIR SIDE, MIRRORED)
SCALE: 1:25

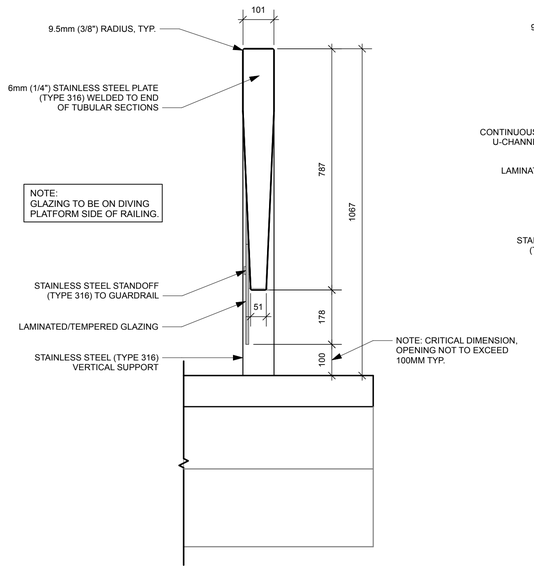

7 A3.4 NEW GUARD RAIL - ELEVATION AT FRONT EDGE
SCALE: 1:10

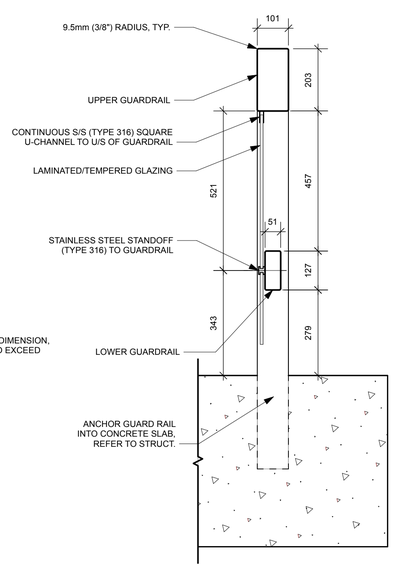

8 A3.4 NEW GUARD RAIL - SECTION
SCALE: 1:10

GENERAL NOTE:
1. ENDS OF ALL STAINLESS STEEL GUARD RAILS TO BE CLOSED WITH STAINLESS STEEL PLATE CONTINUOUSLY WELDED. ALL WELDS TO BE GROUND SMOOTH & POLISHED.
2. GENERAL CONTRACTOR TO PROVIDE SHOP DRAWINGS FOR GUARDRAIL DESIGN, SEALED BY PROFESSIONAL ENGINEER

3			
2			
1			
0	ISSUED FOR CONSTRUCTION		2026-07-28

SEAL
MAA Digital Signature Applied
PROVINCE OF MANITOBA TRAVIS COOKE REGISTERED ARCHITECT
MAA Digital Signature Applied
PROVINCE OF MANITOBA 1x1 ARCHITECTURE INC. No. 1662 APPROVED ARCHITECTURAL CORPORATION

2026-07-28 DATE	ES DESIGNED	ES DRAWN	TC CHECKED	2026-07-28 TC APPROVED

THE CITY OF WINNIPEG
ASSETS & PROJECT MANAGEMENT DEPARTMENT
MUNICIPAL ACCOMMODATIONS DIVISION
3-65 GARRY STREET, R3C 4K4

PROJECT
PAN AM POOL
MAIN TANK RENEWAL

25 POSEIDON BAY

SHEET TITLE
DIVING PLATFORM
RENOVATION GUARD RAIL

SCALE	PROJECT No:	SHEET No:
AS SHOWN	2024-0660	A3.4

DRAWING SHEET SIZE: A1 (594x841) PLOT 1:1