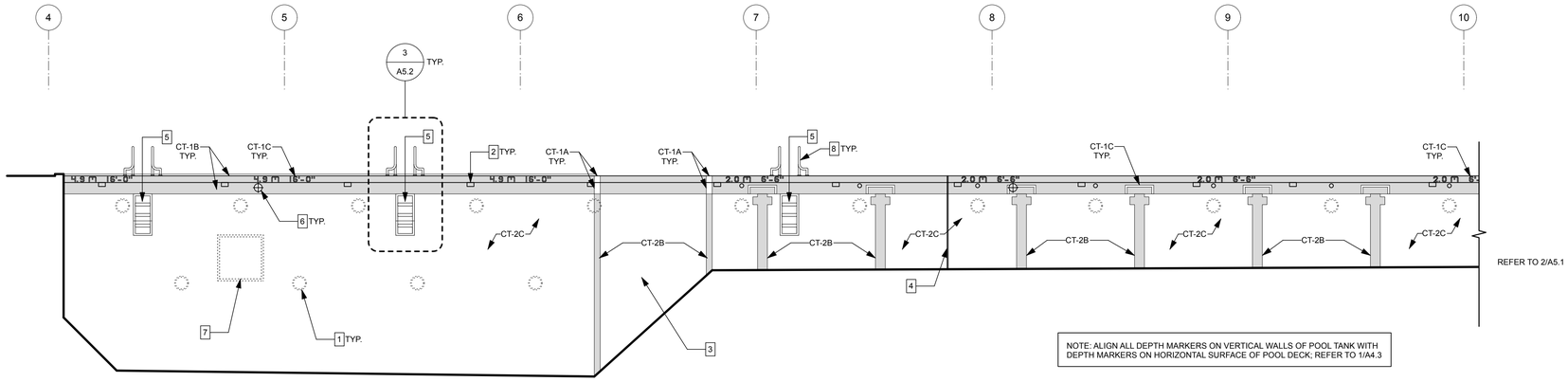

1 A5.1 INTERIOR POOL ELEVATION - NORTH ELEVATION - RENOVATION
SCALE: 1:75

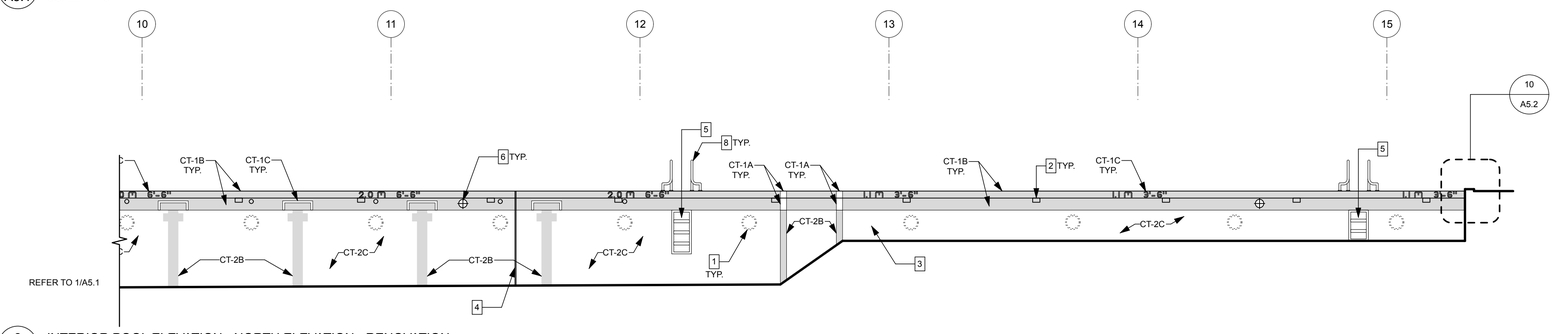

2 A5.1 INTERIOR POOL ELEVATION - NORTH ELEVATION - RENOVATION
SCALE: 1:75

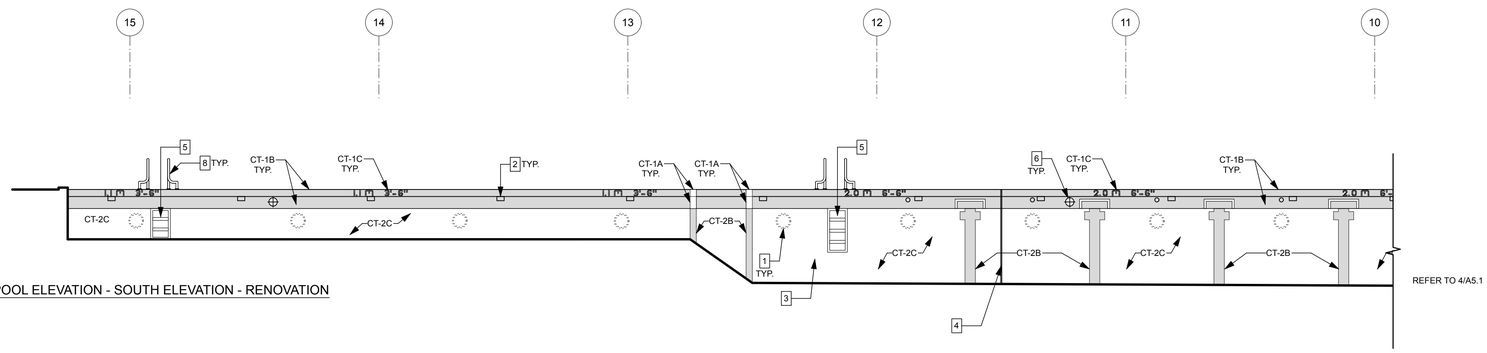

3 A5.1 INTERIOR POOL ELEVATION - SOUTH ELEVATION - RENOVATION
SCALE: 1:75

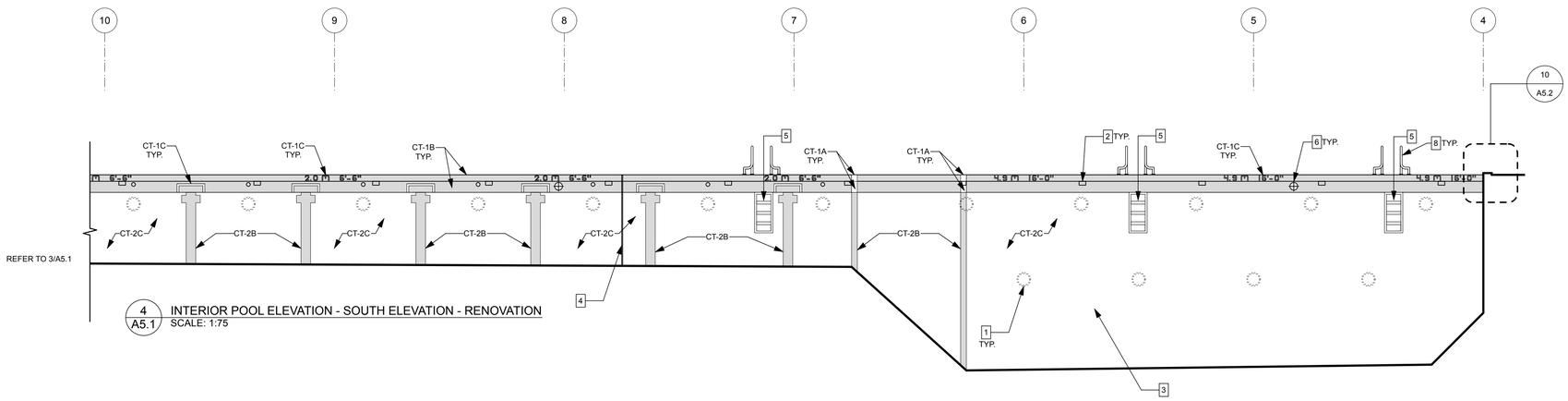

4 A5.1 INTERIOR POOL ELEVATION - SOUTH ELEVATION - RENOVATION
SCALE: 1:75

CrosierKilgour
Structural Engineering & Building Performance

TILE SCHEDULE

CODE	SUPPLIER	PRODUCT	DESCRIPTION	LOCATION
CT-1A	DALTILE	KEYSTONES	25mm x 25mm (1" X 1"), PEPPER WHITE D037	POOL DECK
CT-1B			25mm x 25mm (1" X 1"), BLACK D311	POOL HEADWALLS AND POOL EDGE
CT-1C			25mm x 25mm (1" X 1"), BISCUIT D317	DEPTH MARKERS + LETTERING ON POOL EDGE
CT-2A			51mm x 51mm (2" X 2"), PEPPER WHITE D037	DIVE TOWER STAIRS AND PLATFORM
CT-2B			51mm x 51mm (2" X 2"), BLACK D311	POOL TANK LANE MARKINGS, DIVE TOWER STAIR NOSING, SECCHI DISK, DEPTH MARKER
CT-2C			51mm x 51mm (2" X 2"), BISCUIT D317	POOL TANK WALLS + FLOOR, SECCHI DISK
CT-3A			51mm x 25mm (2" X 1"), TRIM PIECE, BISCUIT C701	POOL COPING w/ GRASPABLE EDGE
CT-3B			51mm x 25mm (2" X 1"), TRIM PIECE, BLACK C701	POOL COPING w/ GRASPABLE EDGE
CT-4			51mm x 51mm (2" X 2"), BUILD-UP COVE BASE MB5B, BLACK D311 127mm x 305mm (5" X 12" SHEET)	PERIMETER WALL BASE
CT-5	INLAYS INC.	MG SERIES	NO DIVING W/ INTERNATIONAL SYMBOL (RED) C621500	POOL EDGE - NO DIVING SYMBOL

GENERAL NOTES:

.1 TILE LAYOUT BASED ON EXISTING CONCRETE BELOW; SITE VERIFICATION REQUIRED.
.2 IN ADDITION TO LOCATIONS OF CONTROL JOINTS SHOWN, PROVIDE PROPOSED LAYOUT OF EXPANSION JOINTS ON TILING PLAN SHOP DRAWINGS.

INTERIOR ELEVATION NOTES:

1. EXISTING UNDERWATER LIGHT TO BE DEMOLISHED AND FILLED TO BE FLUSH W/ TANK WALL, REFER TO STRUCT.
2. NEW STAINLESS STEEL POOL SKIMMER. REFER TO STRUCTURAL AND MECHANICAL.
3. NEW TILE THROUGHOUT THE ENTIRE POOL WALL.
4. STRUCTURAL CONTROL JOINT
5. NEW TILE IN EXISTING STAIR EMBEDDED IN WALL. REFER TO DETAILS ON A5.2
6. VACUUM CLEANER OUTLET.
7. EXISTING UNDERWATER WINDOW TO BE DEMOLISHED AND FILLED TO BE FLUSH W/ TANK WALL. REFER TO STRUCT.
8. EXISTING STAINLESS STEEL LADDER - TO BE REMOVED AND STORED BY CITY OF WINNIPEG DURING CONSTRUCTION. TO BE RE-INSTALLED BY CITY OF WINNIPEG.
9. WATER SPRAYER TO REMAIN, REFER TO STRUCTURAL DETAIL.
10. NEW ROPE ANCHORS TO BE INSTALLED IN EXISTING LOCATION OF POOL TANK WALLS, REFER TO STRUCT. DETAIL.
11. EXISTING BUBBLER SYSTEM OUTLET, REFER TO STRUCT. AND MECH.

| x | architecture inc.
100 Post Street Suite 515 Winnipeg Manitoba R3C 0A8 204 318 2818

3			
2			
1			
0	ISSUED FOR CONSTRUCTION		2026-07-28

SEAL

MAA Digital Signature Applied

PROVINCE OF MANITOBA
TRAVIS COOKE
REGISTERED ARCHITECT

MAA Digital Signature Applied

PROVINCE OF MANITOBA
1x1 ARCHITECTURE INC.
No. 1186
APPROVED ARCHITECTURAL CORPORATION

2026-07-28 DATE	ES DESIGNED	ES DRAWN	TC CHECKED	2026-07-28 TC APPROVED

Winnipeg
THE CITY OF WINNIPEG
ASSETS & PROJECT MANAGEMENT DEPARTMENT
MUNICIPAL ACCOMMODATIONS DIVISION
3-65 GARRY STREET, R3C 4K4

PROJECT
PAN AM POOL
MAIN TANK RENEWAL

25 POSEIDON BAY

SHEET TITLE
POOL TANK ELEVATIONS

SCALE	PROJECT No:	SHEET No:
AS SHOWN	2024-0660	A5.1

DRAWING SHEET SIZE: A1 (594x841) PLOT 1:1