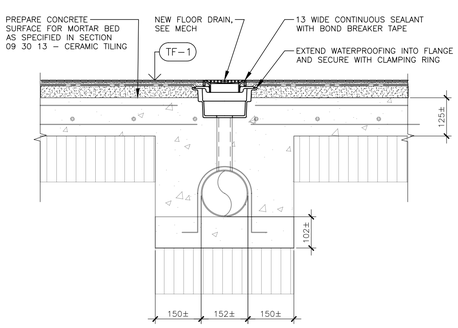


1 S5.3 TYPICAL DECK FLOOR DRAIN DETAIL
1:10 LUMP SUM PRICE

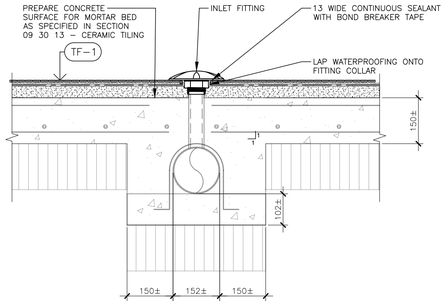


2 S5.3 TYPICAL INLET DETAIL
1:10 LUMP SUM PRICE

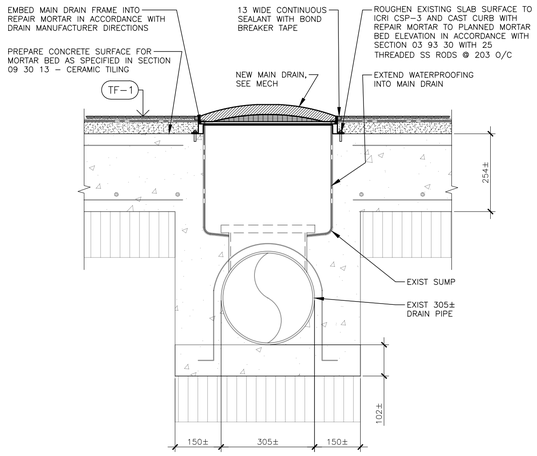


9 S5.3 TYPICAL MAIN DRAIN DETAIL
1:10 LUMP SUM PRICE

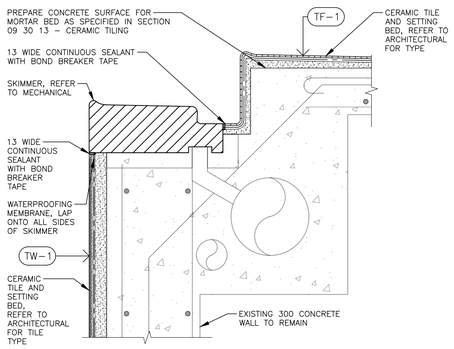


3 S5.3 TYPICAL SKIMMER DETAIL
1:10 LUMP SUM PRICE

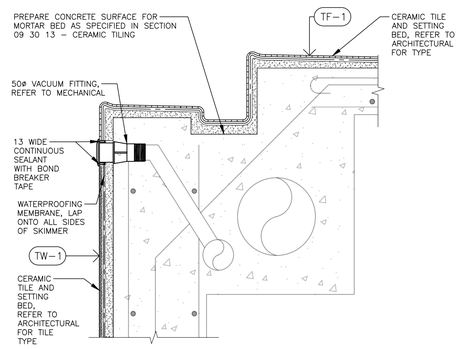


4 S5.3 TYPICAL VACUUM PORT DETAIL
1:10 LUMP SUM PRICE

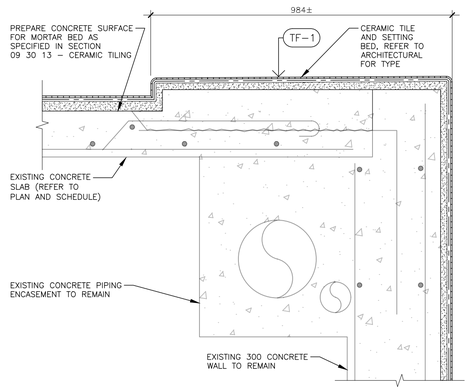


5 S5.3 TYPICAL STARTING BLOCK PLATFORM BASE DETAIL
1:10 LUMP SUM PRICE

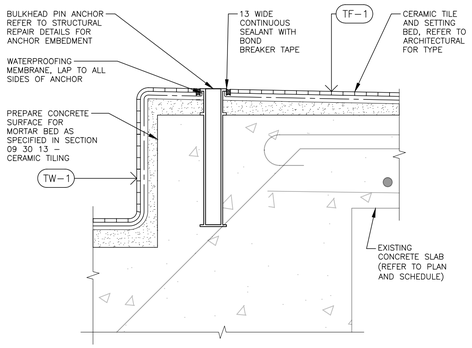


6 S5.3 TYPICAL BULKHEAD PIN ANCHOR DETAIL
1:5 LUMP SUM PRICE

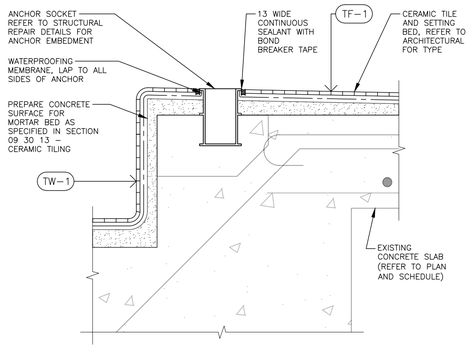


7 S5.3 TYPICAL GRABRAIL ANCHOR DETAIL
1:5 LUMP SUM PRICE

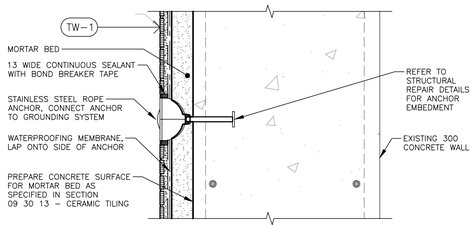


8 S5.3 TYPICAL ROPE ANCHOR DETAIL
1:5 LUMP SUM PRICE

TYPICAL STARTING BLOCK PLATFORM BASE DETAIL

2024-0660

CrosierKilgour
Structural Engineering & Building Performance

ENGINEERS GEOSCIENTISTS MANITOBA
Certificate of Authorization
Crosier Kilgour & Partners Ltd.
No. 235

| No. | REVISION/DESCRIPTION | BY | DATE |
|---|---|---|---|
| | | | |
| | | | |
| 0 | ISSUED FOR CONSTRUCTION | DJM | 2026-08-17 |

SEAL

PROVINCE OF MANITOBA
D.J. MIZAK
Member
20801
REGISTERED PROFESSIONAL ENGINEER
2026-08-17

| 2026-08-17 DATE | TRB DESIGNED | MS/SAS DRAWN | SMC CHECKED | DJM APPROVED |
|---|---|---|---|---|

Winnipeg
THE CITY OF WINNIPEG
ASSETS & PROJECT MANAGEMENT DEPARTMENT
MUNICIPAL ACCOMMODATIONS DIVISION
3-65 GARRY STREET, R3C 4K4

PROJECT
PAN AM POOL
POOL RENEWAL

25 POSEIDON BAY

SHEET TITLE
TILING AND WATERPROOFING DETAILS

| SCALE | PROJECT No: | SHEET No: |
|---|---|---|
| AS SHOWN | 2024-0660 | S5.3 |

DRAWING SHEET SIZE: A1 (594x841) PLOT 1:1