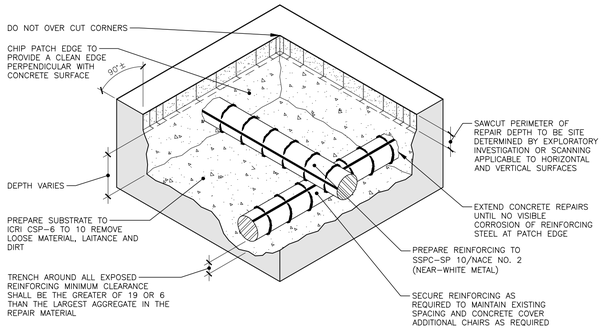

A S6.1 TYPICAL SURFACE PREPARATION OF DELAMINATED CONCRETE

NTS

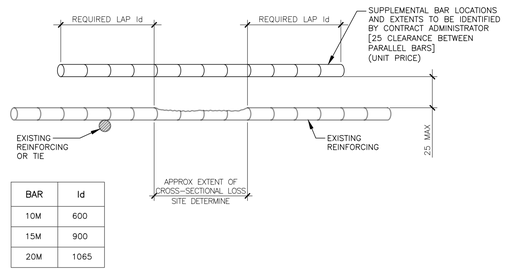

BAR	ld
10M	600
15M	900
20M	1065

B S6.1 REINFORCING BAR SPLICE DETAIL

NTS (UNIT PRICE)

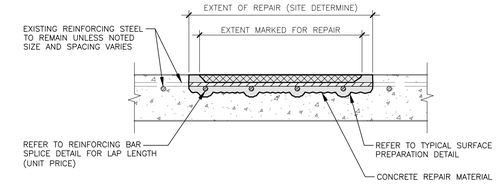

C S6.1 TYPICAL TOP SURFACE REPAIR DETAIL

NTS (UNIT PRICE)

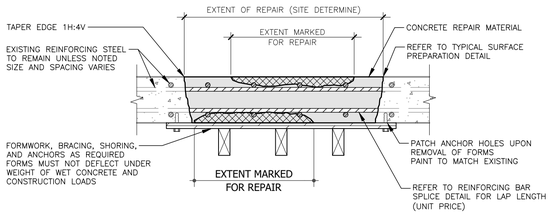

D S6.1 TYPICAL THROUGH SLAB REPAIR DETAIL

NTS (UNIT PRICE)

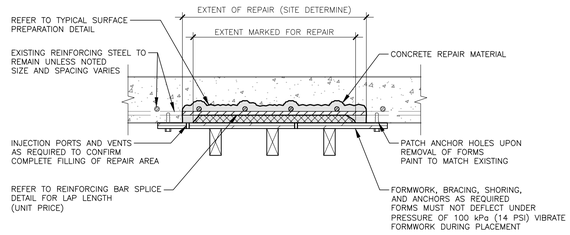

E S6.1 TYPICAL SOFFIT PRESSURE GROUTING REPAIR DETAIL

NTS (UNIT PRICE)

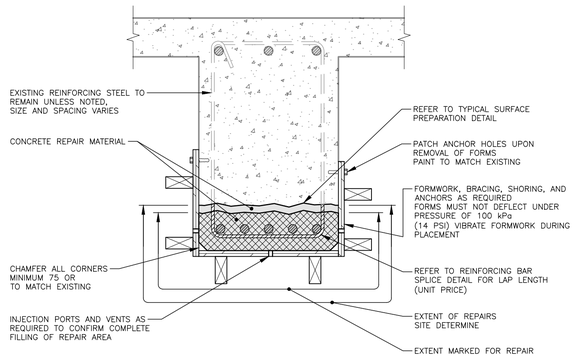

F S6.1 TYPICAL BEAM PRESSURE GROUTING REPAIR DETAIL

NTS (UNIT PRICE)

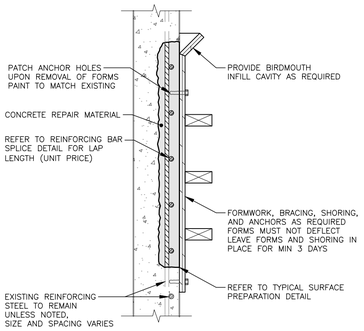

G S6.1 TYPICAL FORM AND POUR COLUMN/WALL REPAIR DETAIL

NTS (UNIT PRICE)

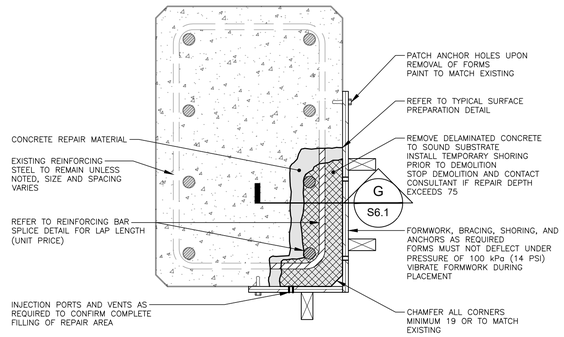

H S6.1 TYPICAL FORM AND POUR COLUMN/WALL REPAIR DETAIL

NTS (UNIT PRICE)

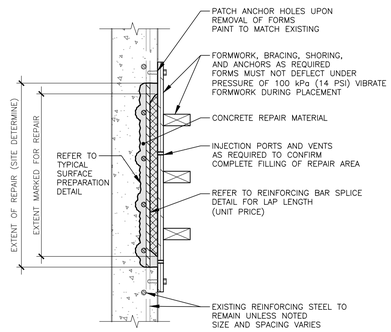

J S6.1 TYPICAL COLUMN/WALL PRESSURE GROUTING REPAIR DETAIL

NTS (UNIT PRICE)

2024-0660

CrosierKilgour
Structural Engineering & Building Performance

ENGINEERS GEOSCIENTISTS MANITOBA
Certificate of Authorization
Crosier Kilgour & Partners Ltd.
No. 235

No.	REVISION/DESCRIPTION	BY	DATE
0	ISSUED FOR CONSTRUCTION	DJM	2026-08-17

SEAL

PROVINCE OF MANITOBA
D.J. MIZAK
Member
20801
REGISTERED PROFESSIONAL ENGINEER
2026-08-17

2026-08-17 DATE	TRB DESIGNED	MS/SAS DRAWN	SMC CHECKED	DJM APPROVED

Winnipeg

THE CITY OF WINNIPEG
ASSETS & PROJECT MANAGEMENT DEPARTMENT
MUNICIPAL ACCOMMODATIONS DIVISION
3-65 GARRY STREET, R3C 4K4

PROJECT
PAN AM POOL
POOL RENEWAL

25 POSEIDON BAY

SHEET TITLE
TYPICAL CONCRETE REPAIR DETAILS

SCALE	PROJECT No:	SHEET No:
AS SHOWN	2024-0660	S6.1

DRAWING SHEET SIZE: A1 (594x841) PLOT 1:1