INSTALLATION DETAILS FOR
POSITIVE DISPLACEMENT AND
NON-MECHANICAL TYPE WATER METER
IN BUILDINGS
20mm & 25mm DOMESTIC SERVICE PIPE

METER SIZE	A (mm)
16mm (5/8")	318
20mm (3/4")	362
25mm (1")	413

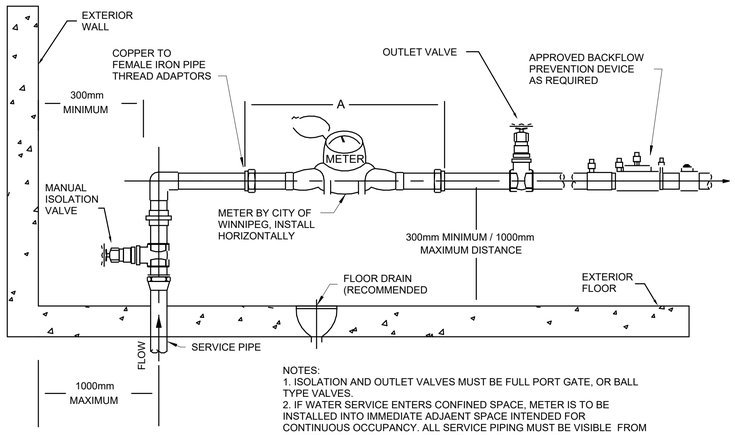

NOTES:
1. ISOLATION AND OUTLET VALVES MUST BE FULL PORT GATE, OR BALL TYPE VALVES.
2. IF WATER SERVICE ENTERS CONFINED SPACE, METER IS TO BE INSTALLED INTO IMMEDIATE ADJAENT SPACE INTENDED FOR CONTINUOUS OCCUPANCY. ALL SERVICE PIPING MUST BE VISIBLE FROM WATER METER WITHOUT ENTRY INTO CONFINED SPACE.
3. PROVIDE AN UNOBSTRUCTED SPACE 1000mm WIDE x 1000mm DEEP x 2000mm HIGH, CENTERED IN FRONT OF THE WATER METER.

1 WATER SERVICE ENTRY - DETAIL
SCALE: NTS

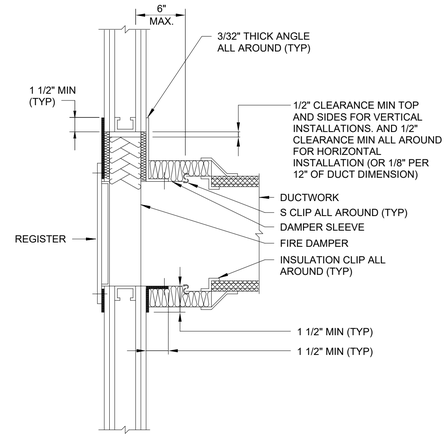

2 FIRE DAMPER - DETAIL
SCALE: NTS

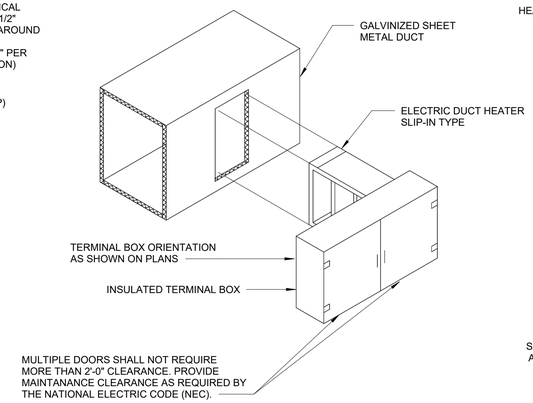

3 ELECTRIC DUCT HEATER - DETAIL
SCALE: NTS

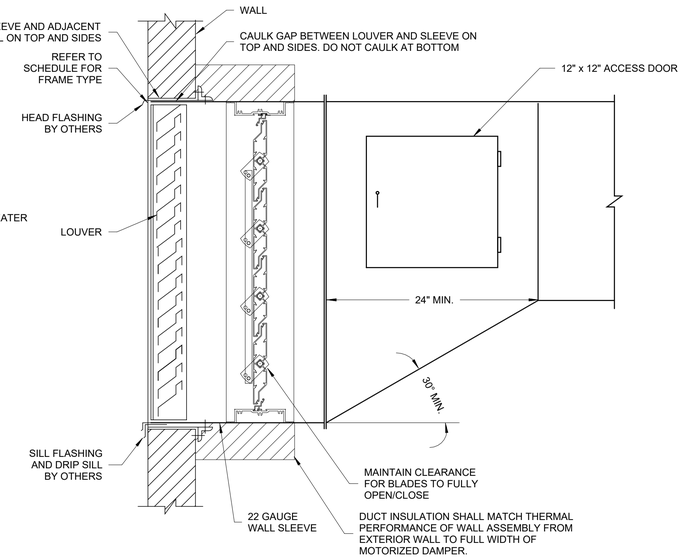

NOTES:

1. DO NOT ATTACH DUCT TO TOP OF LOWER LOUVER BLADE AS TYPICAL. THIS CREATES SEALING PROBLEMS AT ULLIONS AND OTHER VERTICAL MEMBERS.
2. SEAL ALL JOINTS WATER TIGHT AT BOTTOM OF DUCT AND SLEEVE.
3. INSULATE DUCT AND SLEEVE AS SPECIFIED.

4 LOUVER - DETAIL
SCALE: NTS

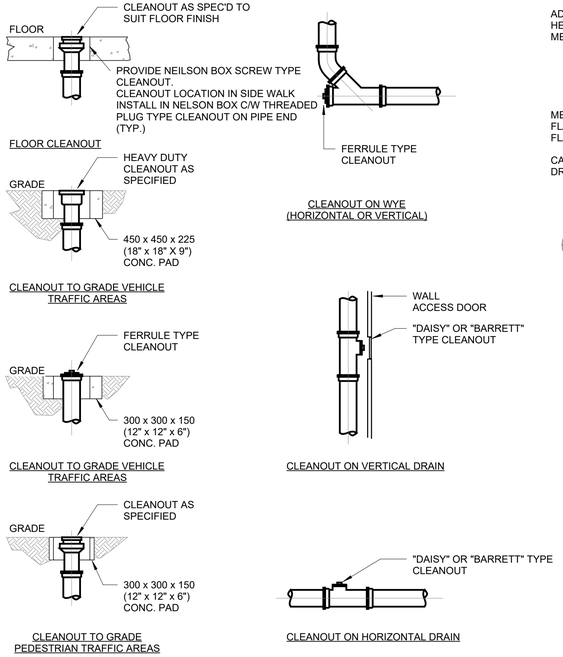

5 CLEANOUT - DETAIL
SCALE: NTS

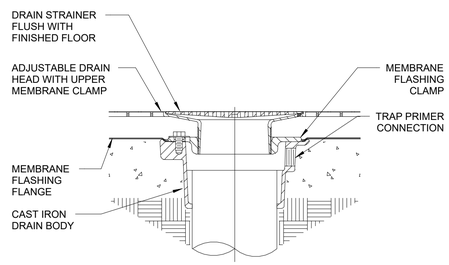

6 FLOOR DRAIN - DETAIL
SCALE: NTS

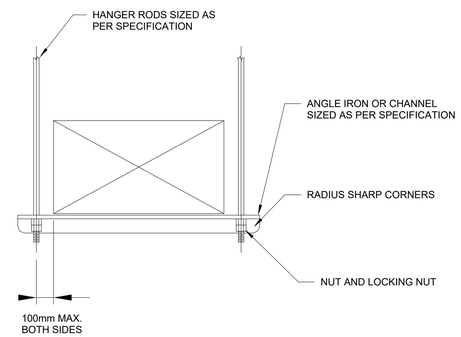

SQUARE / RECTANGULAR DUCT HANGER

7 DUCT SUPPORT TRAPEZE - DETAIL
SCALE: NTS

Rev	Revision Description	Date	Issued by
0	ISSUED FOR CONSTRUCTION	2026-07-16	D.G.

Revision Schedule

ENGINEERS GEOSCIENTISTS MANITOBA
Certificate of Authorization
Alliance Engineering Services Inc.
No.2906

PROVINCE OF MANITOBA
D.A. GOSSEN
Licence No. 50013
July 16th 2026
REGISTERED ENGINEERING LICENSEE

Alliance ENGINEERING SERVICES INC

Winnipeg
CITY OF WINNIPEG
2777 Portage Avenue, Winnipeg, MB, R3J 0R3

GRANT'S OLD MILL
MAINTENANCE BUILDING RENOVATION
DETAILS

DESIGN	CHECKED	SIZE	DWG. NO.
R.D.	D.G.		M4.1
DRAWN	APPROVED	SCALE	SHEET / REV
R.D.	D.G.	AS NOTED	0