PRAIREVIEW ROAD

EXTENT OF PROPERTY

EXISTING PARKING

LIVING PRAIRIE MUSEUM
INTERPRETIVE CENTRE

EXISTING DEDICATION MARKER

EXISTING BOLLARDS & CHAINS
TO BE REMOVED AND RESTORED
AS NECESSARY

EXISTING STREET LIGHTS

EXTENT OF PROPERTY

16602

APPROX. EDGE OF
EXISTING PRAIRIE
TO BE PROTECTED
BY LAYING DOWN PLYWOOD
OR WINTER INSTALATION

SIGN

2433

EXISTING SIDEWALK
TO BE PROTECTED

NESS AVENUE

EXTENT OF PROPERTY

PRAIREVIEW ROAD

Drawings are not to be scaled. all dimensions must be verified before work commences. Any discrepancies, variances, or missing information is to be brought to the attention of the consultant before work proceeds.

The structural systems and components must be approved by a Professional Engineer. Think Desing assumes no liability for any failure in the structural system or any of its components.

living prairie museum

Living Prairie Museum
2795 Ness Ave.
Winnipeg, MB
ph: 832-0167

Project
Living Prairie Museum
Readerboard Sign

Drawing
SIGN LOCATION PLAN

Designed: ES	Revisions
Drawn: ES	
Checked:	
Scale: 1:300	Drawing: A1
Date: Sept. 9, 2009	

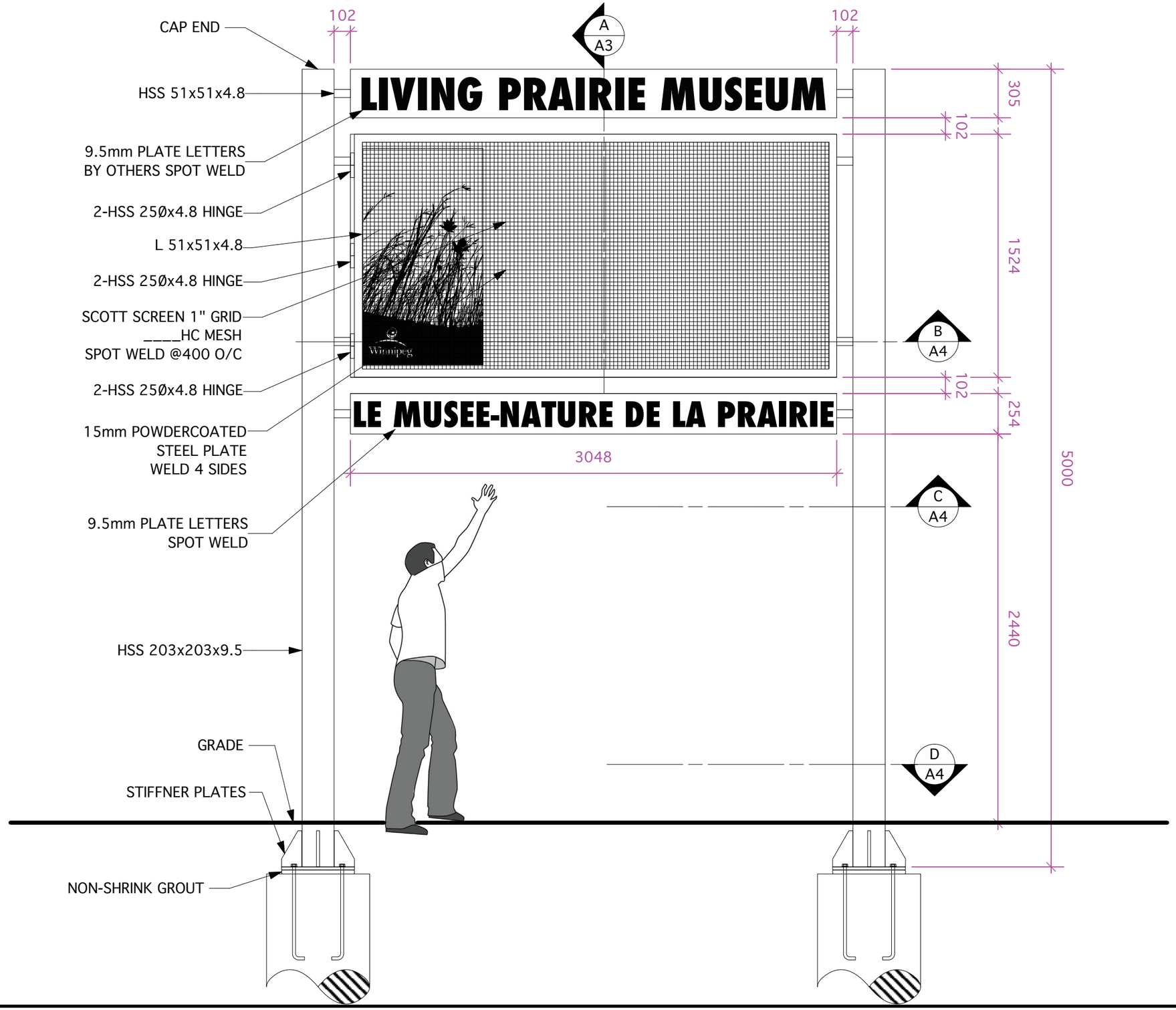

NOTES

- ALL STRUCTURAL STEEL TO BE HOT DIPPED GALVANIZED.
- CAP ALL OPENINGS WITH 76mm PLATE AND WELD CLOSED.
- TOUCH UP SITE TRIMMED STEEL EDGES AND WELDS WITH COLD GALVANIZING COMPOUND.
- PILES:
  - REINFORCEMENT TO BE FULL LENGTH OF PILE.
  - PROVIDE CASING AS REQUIRED
  - BACKFILL EXCAVATION WITH ...

Drawings are not to be scaled. all dimensions must be verified before work commences. Any discrepancies, variances, or missing information is to be brought to the attention of the consultant before work proceeds.

The structural systems and components must be approved by a Professional Engineer. Think Desing assumes no liability for any failure in the structural system or any of its components.

living prairie museum

Living Prairie Museum
2795 Ness Ave.
Winnipeg, MB
ph: 832-0167

Project
Living Prairie Museum
Readerboard Sign

Drawing
Concept Elevations

Designed: ES	Revisions
Drawn: ES	
Checked:	
Scale: 1:25	Drawing: A2
Date: Sept. 9, 2009	

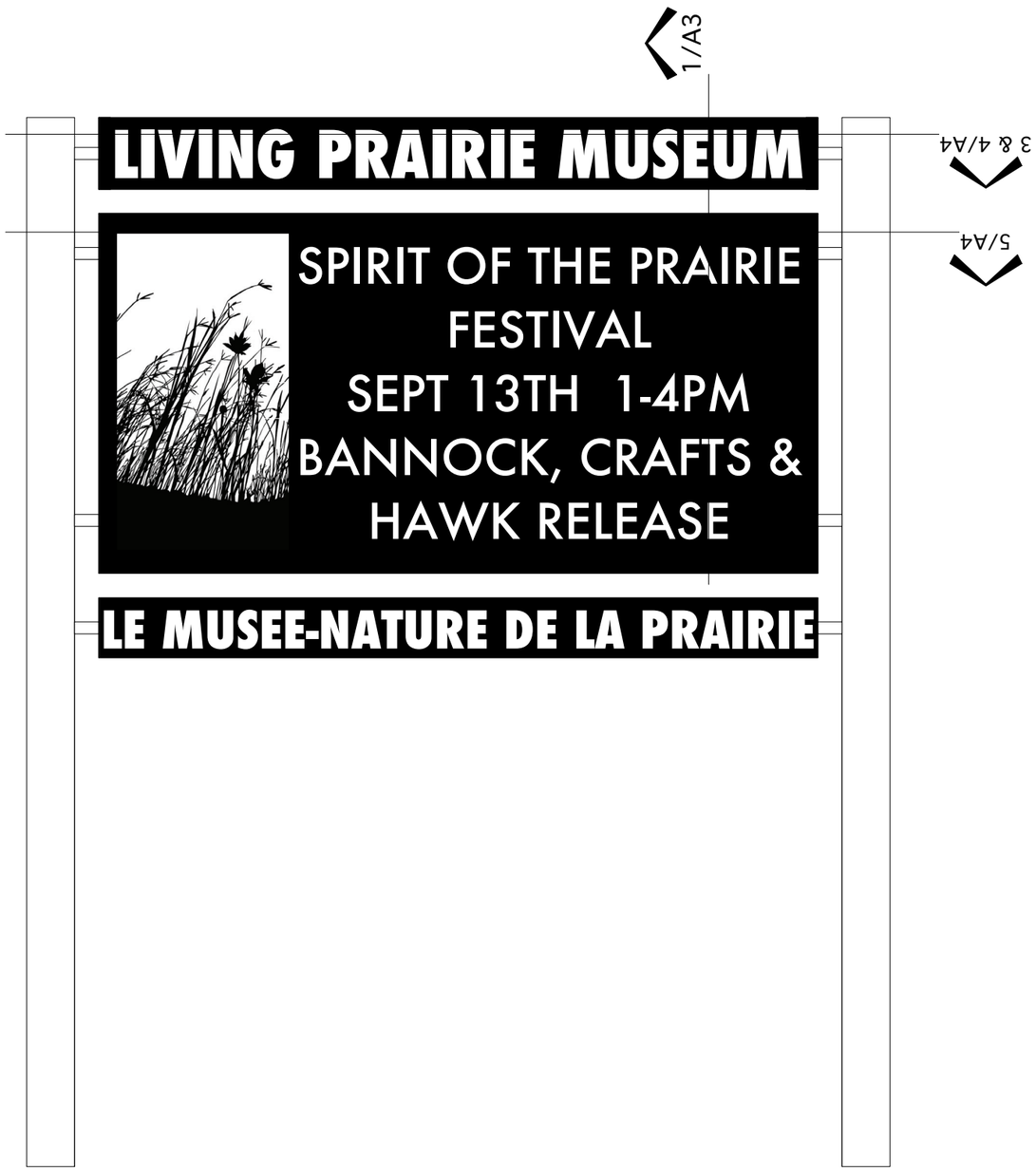

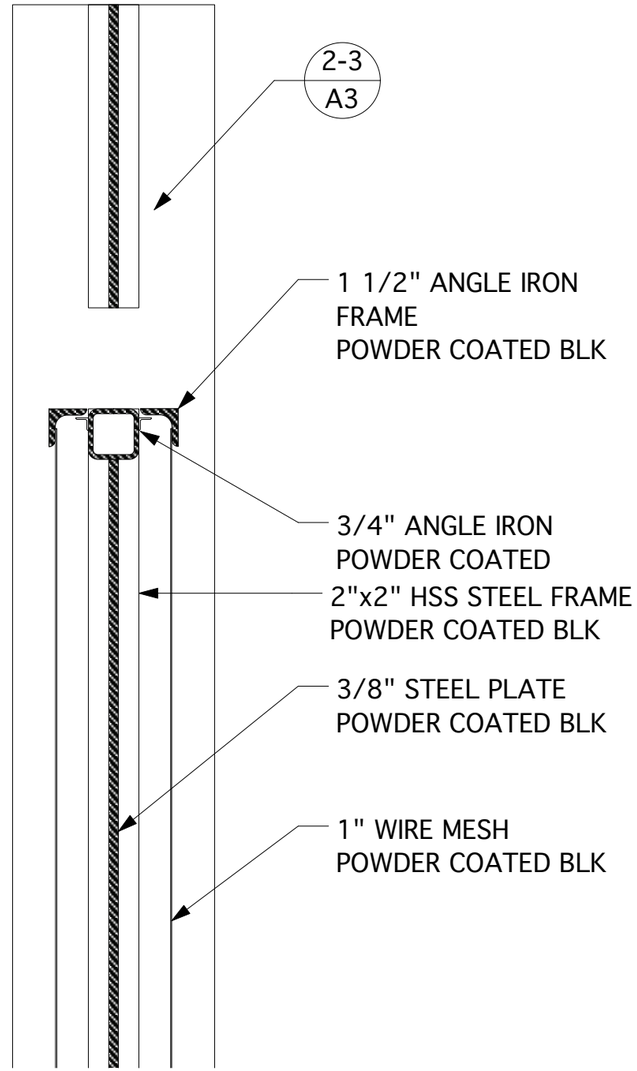

1 READERBOARD SECTION WITH GRILL
2" = 1' 0"

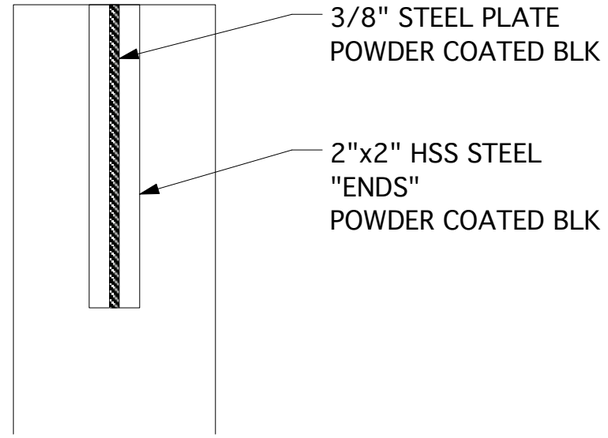

2 SECTION OF NAME SIGN OPTION A
2" = 1'-0"

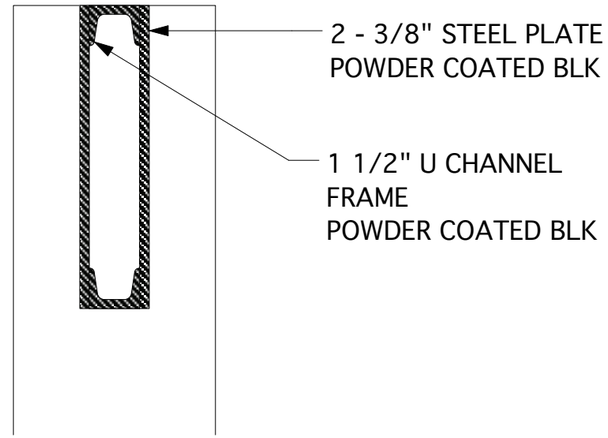

3 SECTION OF NAME SIGN OPTION B
2" = 1' 0"

Living Prairie Museum
2795 Ness Ave.
Winnipeg, MB

ph: 832-0167

Drawings are not to be scaled. all dimensions must be verified before work commences. Any discrepancies, variances, or missing information is to be brought to the attention of the consultant before work proceeds.

The structural systems and components must be approved by a Professional Engineer. Think Desing assumes no liability for any failure in the structural system or any of its components.

Project:
Living Prairie Museum
Readerboard Sign

Date: Sept. 9, 2009

Drawn By: Erin Sawatzky

Sheet Title: **Detail Sections**

Checked By:

Scale:

Revisions:

PRELIMINARY DRAWING

A3

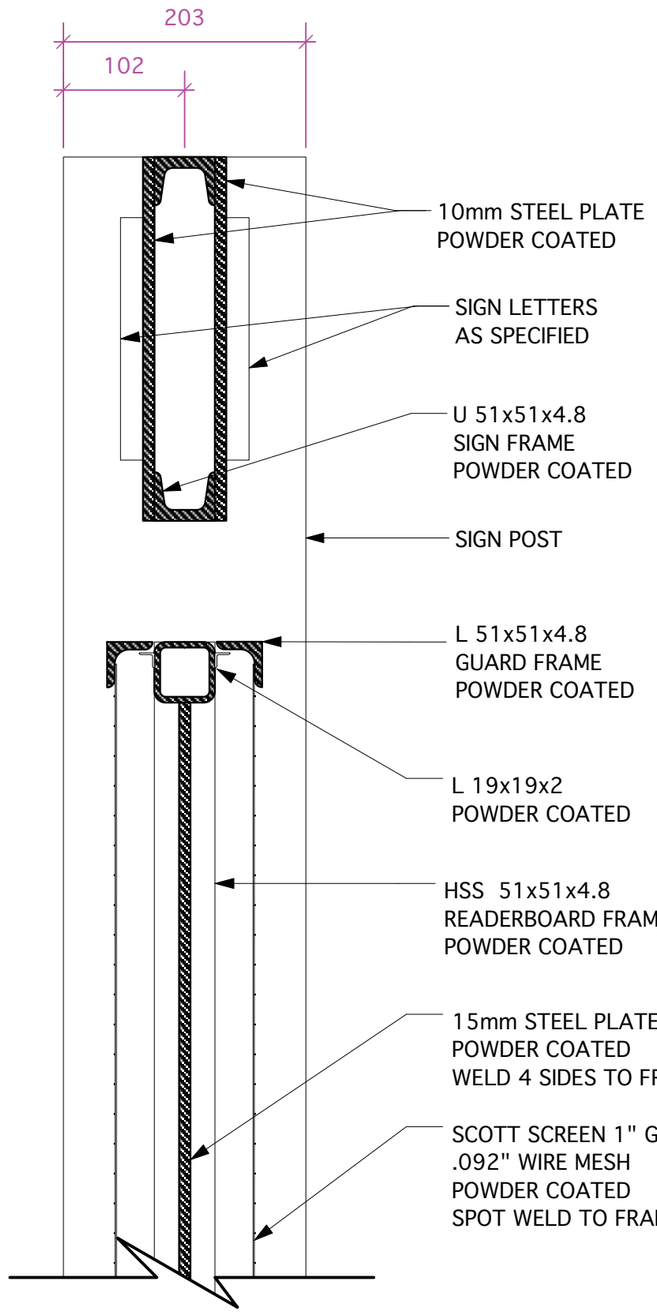

A READEROARD SECTION WITH COVER
1:5

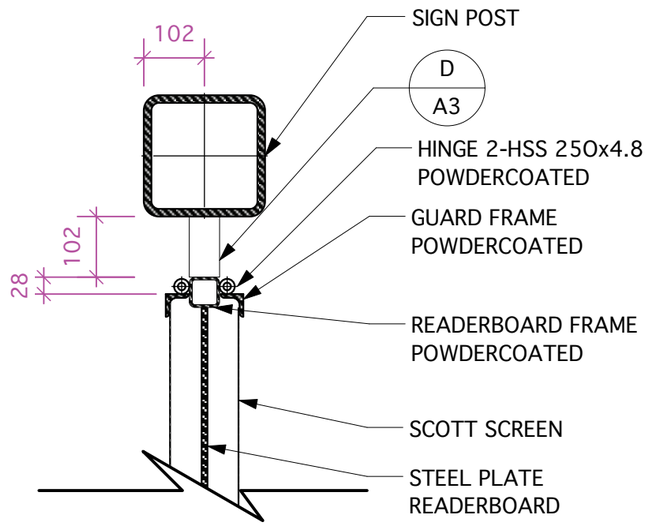

B READERBOARD SECTION WITH GUARD
1:10

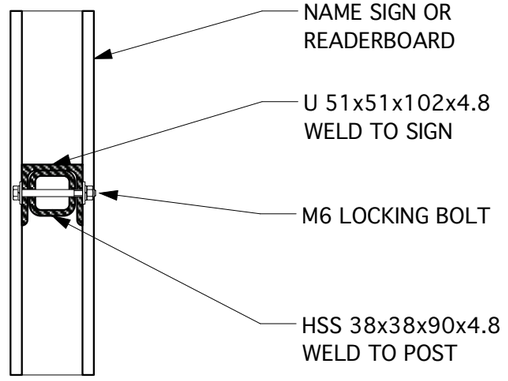

D SIGN TO POST CONNECTION DETAIL
1:5

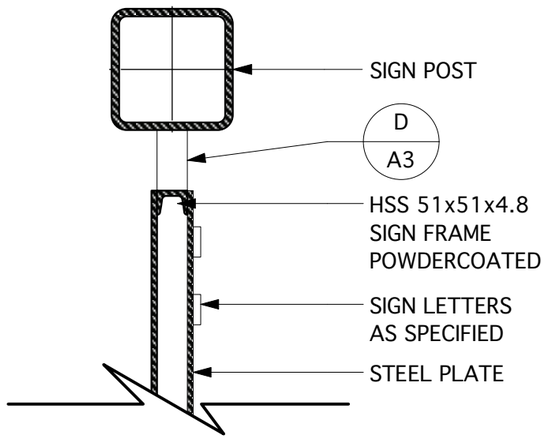

C SECTION OF NAME SIGN
1:10

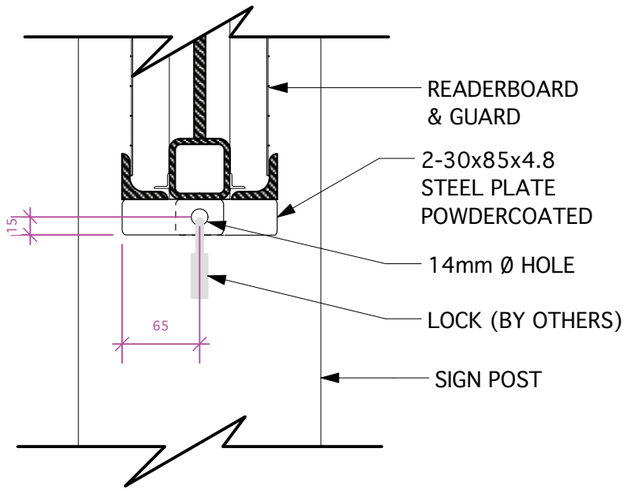

E READERBOARD COVER LOCK DETAIL
1:5

NOTES

Drawings are not to be scaled. all dimensions must be verified before work commences. Any discrepancies, variances, or missing information is to be brought to the attention of the consultant before work proceeds.

The structural systems and components must be approved by a Professional Engineer. Think Desing assumes no liability for any failure in the structural system or any of its components.

living prairie museum



Living Prairie Museum
2795 Ness Ave.
Winnipeg, MB
ph: 832-0167

Project
Living Prairie Museum
Readerboard Sign

Drawing
Details

Designed ES	Revisions
Drawn ES	
Checked	
Scale AS NOTED	Drawing A3
Date Sept. 9, 2009	