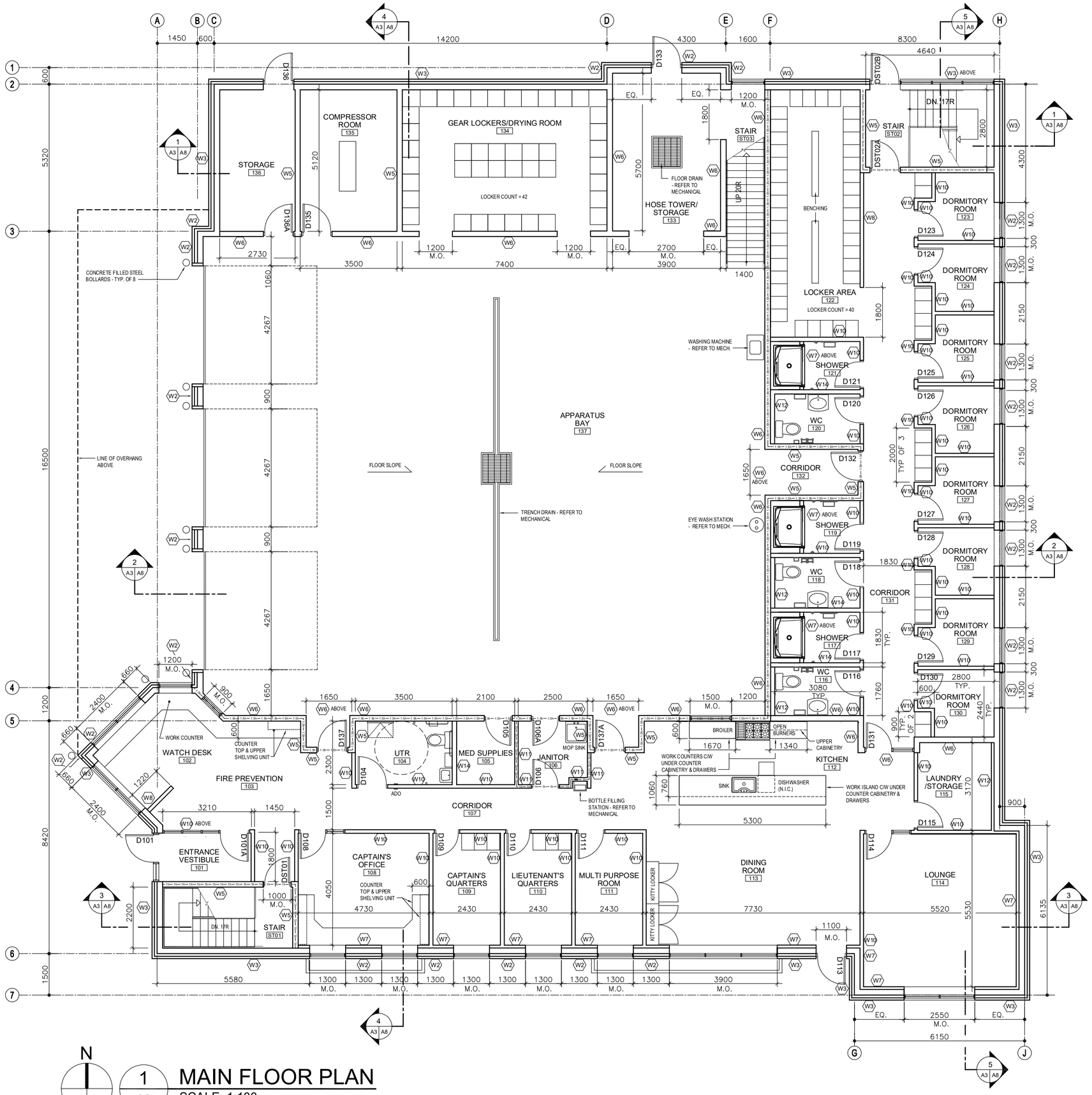

N

1 A3 MAIN FLOOR PLAN
SCALE: 1:100

FIRE SEPARATION LEGEND

1 HR FIRE RATED WALL ASSEMBLY

1-1/2 HR FIRE RATED WALL ASSEMBLY

DOOR SCHEDULE

DOOR No.	WIDTH	HEIGHT	THICKNESS	DOOR TYPE	DOOR FINISH	DOOR STYLE	FRAME TYPE	FRAME FINISH	FIRE RATING	HARDWARE GROUP	REMARKS
D001	900	2100	50	HM	PT	D3	HM	PT			
D002	900	2100	50	HM	PT	D4	HM	PT			
D003	900	2100	50	HM	PT	D4	HM	PT			
D004	900	2100	50	WD	ST	D5	HM	PT			
D004A	900	2100	50	WD	ST	D5	HM	PT			
D005	900	2100	50	WD	ST	D4	HM	PT			
D006	900	2100	50	WD	ST	D4	HM	PT			
D008	900	2100	50	HM	PF	D4	HM	PT			
D009	900	2100	50	HM	PF	D4	HM	PT			
D101	1000	2100	50	AL	ANO	D2	AL	ANO			ADO, GL
D101A	1000	2100	50	AL	ANO	D2	AL	ANO			ADO, GL
D104	1000	2100	50	WD	ST	D5	HM	PT			ADO
D105	900	2100	50	WD	ST	D4	HM	PT	1HR.		INSUL
D106	900	2100	50	WD	ST	D4	HM	PT	45MIN.		
D106A	900	2100	50	HM	PT	D4	HM	PT	1HR.		INSUL
D108	900	2100	50	WD	ST	D6	HM	PT			GL, SDLT
D109	900	2100	50	WD	ST	D5	HM	PT			
D110	900	2100	50	WD	ST	D5	HM	PT			
D111	900	2100	50	WD	ST	D5	HM	PT			GL
D113	900	2100	50	HM	PT	D2	HM	PT			INSUL, GL
D114	900	2100	50	WD	ST	D6	HM	PT			GL, SDLT
D115	900	2100	50	WD	ST	D4	HM	PT			
D116	900	2100	50	WD	ST	D4	HM	PT			
D117	900	2100	50	WD	ST	D4	HM	PT			
D118	900	2100	50	WD	ST	D4	HM	PT			
D119	900	2100	50	WD	ST	D4	HM	PT			
D120	900	2100	50	WD	ST	D4	HM	PT			
D121	900	2100	50	WD	ST	D4	HM	PT			
D123	900	2100	50	WD	ST	D4	HM	PT			
D124	900	2100	50	WD	ST	D4	HM	PT			
D125	900	2100	50	WD	ST	D4	HM	PT			
D126	900	2100	50	WD	ST	D4	HM	PT			
D127	900	2100	50	WD	ST	D4	HM	PT			
D128	900	2100	50	WD	ST	D4	HM	PT			
D129	900	2100	50	WD	ST	D4	HM	PT			
D130	900	2100	50	WD	ST	D4	HM	PT			
D131	900	2100	50	HM	PT	D6	HM	PT			GL
D132	1000	2100	50	HM	PT	D3	HM	PT	1HR.		INSUL, GWG
D133	1000	2100	50	HM	PT	D4	HM	PT			INSUL
D135	900	2100	50	HM	PT	D4	HM	PT			
D136	1000	2100	50	HM	PT	D1	HM	PT			
D136A	1000	2100	50	HM	PT	D1	HM	PT			
D137	1000	2100	50	HM	PT	D3	HM	PT	45MIN.		INSUL, GWG
D137A	1000	2100	50	HM	PT	D3	HM	PT	45MIN.		INSUL, GWG
DST01	1000	2100	50	HM	PT	D3	HM	PT	45MIN.		GWG
DST01A	1000	2100	50	HM	PT	D3	HM	PT	45MIN.		GWG
DST02	1000	2100	50	HM	PT	D3	HM	PT	45MIN.		GWG
DST02A	1000	2100	50	HM	PT	D3	HM	PT	45MIN.		GWG
DST02B	1000	2100	50	HM	PT	D3	HM	PT	45MIN.		INSUL, GL

DOOR SCHEDULE LEGEND

RHR	RIGHT HAND
LHR	LEFT HAND
RH	RIGHT HAND REVERSE
LH	LEFT HAND REVERSE
HM	HOLLOW METAL
WD	WOOD
CG	CLEAR GLASS
GL	GLAZING
GWG	GEORGIAN WIRED GLASS
INSUL	INSULATED
SDLT	SIDE LIGHT
ST	STAINED
PT	PAINT/PAINTED
ANO	ANODIZED
SCW	SOLID CORE WOOD
PL	PLASTIC LAMINATE

DOOR ELEVATION

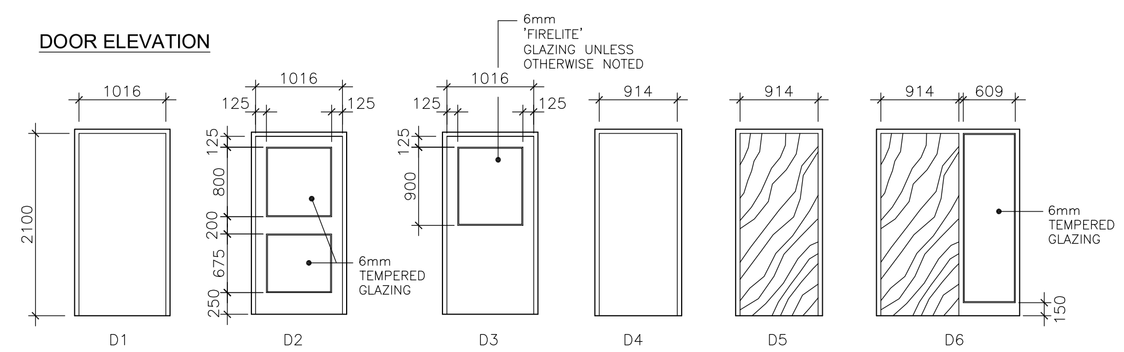

No.	REVISION / DESCRIPTION	BY	DATE
B	ISSUED FOR DESIGN BUILD RFP	PS	MAR 7 2025
A	ISSUED FOR CLASS 3 ESTIMATE	PS	MAY24 2024

SEAL

DATE	DESIGNED	DRAWN	CHECKED	APPROVED
2024.03.25	BP / PS	PS		

THE CITY OF WINNIPEG
ASSETS & PROJECT MANAGEMENT DEPARTMENT
MUNICIPAL ACCOMMODATIONS DIVISION
3-65 GARRY STREET, R3C 4K4

PROJECT
WINNIPEG FIRE PARAMEDIC SERVICE STATION 15

RUTH CROSSING AT BISON DRIVE

SHEET TITLE
MAIN FLOOR PLAN
DOOR SCHEDULE

PRELIMINARY ONLY
NOT FOR CONSTRUCTION

SCALE	PROJECT No:	SHEET No:
AS SHOWN	2022-097	A3

DRAWING SHEET SIZE: A1 (594x841) PLOT 1:1